Combination of Indoor and Outdoor Units

PZ2

Single-phase

	36	45	50	60	71	100	125	140
U2						S-100PU2E5B U-100PZ2E5	S-125PU2E5B U-125PZ2E5	S-140PU2E5B U-140PZ2E5
			S-50PU2E5B x2 U-100PZ2E5	S-60PU2E5B x2 U-125PZ2E5	S-71PU2E5B x2 U-140PZ2E5			
T2						S-100PT2E5B U-100PZ2E5	S-125PT2E5B U-125PZ2E5	S-140PT2E5B U-140PZ2E5
			S-50PT2E5B x2 U-100PZ2E5	S-60PT2E5B x2 U-125PZ2E5	S-71PT2E5B x2 U-140PZ2E5			
K2						S-100PK2E5B U-100PZ2E5		
			S-50PK2E5B x2 U-100PZ2E5	S-60PK2E5B x2 U-125PZ2E5	S-71PK2E5B x2 U-140PZ2E5			
F1						S-100PF1E5B U-100PZ2E5	S-125PF1E5B U-125PZ2E5	S-140PF1E5B U-140PZ2E5
			S-50PF1E5B x2 U-100PZ2E5	S-60PF1E5B x2 U-125PZ2E5	S-71PF1E5B x2 U-140PZ2E5			

Combination of Indoor and Outdoor Units

PZ2

3-phase

	36	45	50	60	71	100	125	140
U2						S-100PU2E5B U-100PZ2E8	S-125PU2E5B U-125PZ2E8	S-140PU2E5B U-140PZ2E8
			S-50PU2E5B x2 U-100PZ2E8	S-60PU2E5B x2 U-125PZ2E8	S-71PU2E5B x2 U-140PZ2E8			
T2						S-100PT2E5B U-100PZ2E8	S-125PT2E5B U-125PZ2E8	S-140PT2E5B U-140PZ2E8
			S-50PT2E5B x2 U-100PZ2E8	S-60PT2E5B x2 U-125PZ2E8	S-71PT2E5B x2 U-140PZ2E8			
K2						S-100PK2E5B U-100PZ2E8		
			S-50PK2E5B x2 U-100PZ2E8	S-60PK2E5B x2 U-125PZ2E8	S-71PK2E5B x2 U-140PZ2E8			
F1						S-100PF1E5B U-100PZ2E8	S-125PF1E5B U-125PZ2E8	S-140PF1E5B U-140PZ2E8
			S-50PF1E5B x2 U-100PZ2E8	S-60PF1E5B x2 U-125PZ2E8	S-71PF1E5B x2 U-140PZ2E8			

1. SPECIFICATIONS

Simultaneous (Twin) -Type

1-1. Unit Specifications

PZ2

1. 4-Way Cassette Type S-50PU2E5B×2 / U-100PZ2E5

INDOOR		MODEL	S-50PU2E5B×2			-			-	
PANEL		MODEL	Standard type:CZ-KPU3 ×2 / ECONAVI type:CZ-KPU3A ×2			-			-	
OUTDOOR		MODEL	-			U-100PZ2E5			-	
Branch pipe		MODEL	-							
Performance test condition			ISO5151 / EN14511 / EN12102 / EN14825							
Power supply		Ø, Hz	1Ø 50Hz			1Ø 50Hz				
		V	220V	230V	240V	220V	230V	240V	Min	Max
COOLING	Capacity	kW	10.0	10.0	10.0	-	-	-	3.0	11.5
		BTU/h	34100	34100	34100	-	-	-	10200	39200
	Current	A	0.27×2	0.26×2	0.25×2	12.3	11.7	11.2	-	-
	Input power	W	29×2	29×2	29×2	2.562k	2.562k	2.562k	-	-
		TOTAL W	-			2.620k	2.620k	2.620k	560	4.000k
	Annual consumption	TOTAL kWh *4	-			-	1310	-	-	-
	EER/EER CLASS	TOTAL (W/W) *5/ ("A"~"G")	-	-	-	3.82	3.82/A	3.82	5.36	2.88
	Erp *6 Pdesign	kW	-	-	-	-	10.0	-	-	-
	Erp *6 SEER	(W/W)	-	-	-	-	6.8	-	-	-
	Erp *6 Annual consumption	kWh	-	-	-	-	515	-	-	-
	Erp *6 Class		-	-	-	-	A++	-	-	-
	Power factor	%	-	-	-	95	95	95	-	-
	Noise indoor	dB-A (H/M/L) *7	32/29/27			-			-	-
		Power Level dB	47/44/42			-			-	-
	Noise outdoor	dB-A (H/L)	-			52/-			-	-
		Power Level dB	-			70/-			-	-
HEATING	Capacity	kW	10.0	10.0	10.0	-	-	-	3.0	14.0
		BTU/h	34100	34100	34100	-	-	-	10200	47800
	Current	A	0.26×2	0.25×2	0.24×2	9.45	9.05	8.65	-	-
	Input power	W	27×2	27×2	27×2	1.976k	1.976k	1.976k	-	-
		TOTAL W	-			2.030k	2.030k	2.030k	560	3.900k
	COP/COP CLASS	TOTAL (W/W) *5/ ("A"~"G")	-	-	-	4.93	4.93/A	4.93	5.36	3.59
	Erp *6 Pdesign at -10°C	kW	-	-	-	-	10.0	-	-	-
	Erp *6 Tbivalent	°C	-	-	-	-	-10	-	-	-
	Erp *6 SCOP	(W/W)	-	-	-	-	4.4	-	-	-
	Erp *6 Annual consumption	kWh	-	-	-	-	3182	-	-	-
	Erp *6 elbu(-10°C)	kW	-	-	-	-	0.00	-	-	-
	Erp *6 Class		-	-	-	-	A+	-	-	-
	Power factor	%	-	-	-	95	95	95	-	-
	Noise indoor	dB-A (H/M/L) *7	32/29/27			-			-	-
		Power Level dB	47/44/42			-			-	-
	Noise outdoor	dB-A (H/L)	-			52/-			-	-
		Power Level dB	-			70/-			-	-
EXTRA LOW TEMP	Total capacity(kW) / Input power(W) / COP		-						-	
Max Current(A) / Max Input power(W)			0.27×2/29×2	0.26×2/29×2	0.25×2/29×2	25.0/5.25k	25.0/5.50k	25.0/5.70k	-	
Starting current(A) (Cooling/Heating)			-	-	-	12.3/9.45	11.7/9.05	11.2/8.65	-	
Comp output(W)						2.50k	2.50k	2.50k		
Network Impedance(ΩMAX.)			-			-			-	
Fan motor output (Indoor/Outdoor) W			60			120			-	
Moisture removal volume		L/h(Pt/h)	3.2	(1.6×2)	(6.8)	-			-	
External static pressure		Pa	-			-			-	
Indoor Air flow *7	Cooling	m³/min (ft³/min)	16.5×2/13.5×2/11.5×2 (583)×2/(477)×2/(406)×2			-			-	-
	Heating	m³/min (ft³/min)	16.5×2/13.5×2/11.5×2 (583)×2/(477)×2/(406)×2			-			-	-
Outdoor Air flow	Cooling	m³/min (ft³/min)	-			76.0 (2683)			-	-
	Heating	m³/min (ft³/min)	-			70.0 (2472)			-	-
Refrigerant type / amount g(oz)			-			R32	2.60k	(91.7)	-	
Product dimension		Height mm(inch)	256 (10-5/64)			996 (39- 7/32)			-	
		Width mm(inch)	840 (33-5/64)			980 (38-37/64)			-	
		Depth mm(inch)	840 (33-5/64)			370 (14- 9/16)			-	
Product dimension (Panel)		H×W×D mm, inch	33.5×950×950 (1-11/32×37-13/32×37-13/32)			-			-	
Packing dimension		Height mm(inch)	302 (11-57/64)			1134 (44-41/64)			-	
		Width mm(inch)	898 (35-3/8)			1095 (43-7/64)			-	
		Depth mm(inch)	898 (35-3/8)			529 (20-53/64)			-	
Weight		(NET) kg(lb)	19 (42)			90 (199)			-	
		(GROSS) kg(lb)	26 (57)			98 (216)			-	
		Panel (NET) kg(lb)	5 (11)			-			-	
Layers limit (actually)			11 (12)			2 (3)			-	
Operation condition		Cool (DBT)	18°C ~ 32°C			-10°C ~ 43°C			-	
		Heat (DBT)	16°C ~ 30°C			-15°C ~ 24°C			-	
MAX WORKING PRESSURE HP/LP MPa (bar)			4.15/2.55 (41.5/25.5)						-	
PIPING	Pipe diameter mm (inch)		(Liquid)Ø6.35(1/4) (Gas)Ø12.7(1/2)			(Liquid)Ø9.52(3/8) (Gas)Ø15.88(5/8)			-	
	Connecting method, Standard length m(ft)		flared type, 5.0(16.4)			flared type, 5.0(16.4)			-	
	Pipe length range m (ft)		5 ~ 50m (16.4 ~ 164.0)						-	
	Indoor unit & Outdoor unit height difference m (ft)		15m(OD located lower)/30m(OD located higher) (49.2/98.4)						-	
	Add gas amount g/m (oz/ft)		45g/m (0.484)						-	
	Pipe length for additional gas m (ft)		30m (98.4)						-	

*1 In case it is necessary to indicate the air flow volume in (l/s), the value in (m³/min.) shall be multiplied by 16.7 and rounded down the decimal point.
*2 If the EUROVENT Certified models can be operated under the "extra-low"temperature condition, -7°C dry bulb and -8°C wet-bulb temperatures with rated voltage 230V shall be used.
*3 Network Impedance shall be applicable for EUROPE and CHINA models.
*4 The annual consumption is calculated by multiplying the input power at 230V(400V) by an average of 500 hours per year in cooling mode.
*5 EER and COP classification is at 230V(400V) only in accordance with EU directive 2002/31/EC.
*6 SEER and SCOP classification is at 230V(400V) only in accordance with EN-14825. For heating, SCOP indicates the value of only Average heating season, Other fiche data indicates in an attached sheet
*7 H: High at setting 5 stage (Level 5), M: Middle at setting 5 stage (Level 3), L: Low at setting 5 stage (Level 1)

Simultaneous (Twin) -Type

1-1. Unit Specifications

PZ2

1. 4-Way Cassette Type S-60PU2E5B×2 / U-125PZ2E5

INDOOR		MODEL	S-60PU2E5B ×2			-			-	
PANEL		MODEL	Standard type: CZ-KPU3×2 / ECONAVI type: CZ-KPU3A×2			-			-	
OUTDOOR		MODEL	-			U-125PZ2E5			-	
Branch pipe		MODEL	-							
Performance test condition			ISO5151 / EN14511 / EN12102 / EN14825							
Power supply		Ø, Hz	1Ø 50Hz			1Ø 50Hz				
		V	220V	230V	240V	220V	230V	240V	Min	Max
COOLING	Capacity	kW	12.5	12.5	12.5	-	-	-	3.2	13.5
		BTU/h	42700	42700	42700	-	-	-	10900	46100
	Current	A	0.36×2	0.35×2	0.34×2	16.5	15.8	15.1	-	-
	Input power	W	38×2	38×2	38×2	3.414k	3.414k	3.414k	-	-
		TOTAL W	-			3.490k	3.490k	3.490k	600	4.800k
	Annual consumption	TOTAL kWh *4	-			-	1745	-	-	-
	EER/EER CLASS	TOTAL (W/W) *5/ ("A"~"G")	-	-	-	3.58	3.58/A	3.58	5.33	2.81
	Erp *6 Pdesign	kW	-	-	-	-	12.5	-	-	-
	Erp *6 $\eta_{s,c}$	%	-	-	-	-	270.8	-	-	-
	Erp *6 Annual consumption	kWh	-	-	-	-	-	-	-	-
	Erp *6 Class		-	-	-	-	-	-	-	-
	Power factor	%	-	-	-	94	94	94	-	-
	Noise indoor	dB-A (H/M/L) *7	36/31/28			-			-	-
		Power Level dB	51/46/43			-			-	-
	Noise outdoor	dB-A (H/L)	-			55/-			-	-
		Power Level dB	-			73/-			-	-
HEATING	Capacity	kW	12.5	12.5	12.5	-	-	-	3.3	15.0
		BTU/h	42700	42700	42700	-	-	-	11300	51200
	Current	A	0.35×2	0.34×2	0.33×2	13.3	12.7	12.2	-	-
	Input power	W	36×2	36×2	36×2	2.748k	2.748k	2.748k	-	-
		TOTAL W	-			2.820k	2.820k	2.820k	600	4.200k
	COP/COP CLASS	TOTAL (W/W) *5/ ("A"~"G")	-	-	-	4.43	4.43/A	4.43	5.50	3.57
	Erp *6 Pdesign at -10°C	kW	-	-	-	-	12.5	-	-	-
	Erp *6 Tbivalent	°C	-	-	-	-	-10	-	-	-
	Erp *6 $\eta_{s,h}$	%	-	-	-	-	157.4	-	-	-
	Erp *6 Annual consumption	kWh	-	-	-	-	-	-	-	-
	Erp *6 elbu(-10°C)	kW	-	-	-	-	0.00	-	-	-
	Erp *6 Class		-	-	-	-	-	-	-	-
	Power factor	%	-	-	-	94	94	94	-	-
	Noise indoor	dB-A (H/M/L) *7	36/31/28			-			-	-
		Power Level dB	51/46/43			-			-	-
	Noise outdoor	dB-A (H/L)	-			55/-			-	-
		Power Level dB	-			73/-			-	-
EXTRA LOW TEMP	Total capacity(kW) / Input power(W) / COP		-						-	
Max Current(A) / Max Input power(W)			0.36×2/38×2	0.35×2/38×2	0.34×2/38×2	29.0/6.00k	29.0/6.30k	29.0/6.60k	-	
Starting current(A) (Cooling/Heating)			-	-	-	16.5/13.3	15.8/12.7	15.1/12.2	-	
Comp output(W)						2.80k	2.80k	2.80k		
Network Impedance(ΩMAX.)			-			-			-	
Fan motor output (Indoor/Outdoor) W			60			120			-	
Moisture removal volume		L/h(Pt/h)	3.4	(1.7×2)	(7.2)	-			-	
External static pressure		Pa	-			-			-	
Indoor Air flow *7	Cooling	m³/min (ft³/min)	21.0×2/16.0×2/13.0×2 (742)×2/(565)×2/(459)×2			-			-	-
	Heating	m³/min (ft³/min)	21.0×2/16.0×2/13.0×2 (742)×2/(565)×2/(459)×2			-			-	-
Outdoor Air flow	Cooling	m³/min (ft³/min)	-			86.0 (3037)			-	-
	Heating	m³/min (ft³/min)	-			78.0 (2754)			-	-
Refrigerant type / amount g(oz)			-			R32	2.98k	(105.1)	-	
Product dimension		Height mm(inch)	256 (10-5/64)			996 (39- 7/32)			-	
		Width mm(inch)	840 (33-5/64)			980 (38-37/64)			-	
		Depth mm(inch)	840 (33-5/64)			370 (14- 9/16)			-	
Product dimension (Panel)		H×W×D mm, inch	33.5×950×950 (1-11/32×37-13/32×37-13/32)			-			-	
Packing dimension		Height mm(inch)	302 (11-57/64)			1134 (44-41/64)			-	
		Width mm(inch)	898 (35-3/8)			1095 (43-7/64)			-	
		Depth mm(inch)	898 (35-3/8)			529 (20-53/64)			-	
Weight		(NET) kg(lb)	20 (44)			94 (207)			-	
		(GROSS) kg(lb)	27 (60)			102 (224)			-	
		Panel (NET) kg(lb)	5 (11)			-			-	
Layers limit (actually)			11 (12)			2 (3)			-	
Operation condition		Cool (DBT)	18°C ~ 32°C			-10°C ~ 43°C			-	
		Heat (DBT)	16°C ~ 30°C			-15°C ~ 24°C			-	
MAX WORKING PRESSURE HP/LP MPa (bar)			4.15/2.55 (41.5/25.5)						-	
PIPING	Pipe diameter mm (inch)		(Liquid)Ø9.52(3/8) (Gas)Ø15.88(5/8)			(Liquid)Ø9.52(3/8) (Gas)Ø15.88(5/8)			-	
	Connecting method, Standard length m(ft)		flared type, 5.0(16.4)			flared type, 5.0(16.4)			-	
	Pipe length range m (ft)		5 ~ 50m (16.4 ~ 164.0)						-	
	Indoor unit & Outdoor unit height difference m (ft)		15m(OD located lower)/30m(OD located higher) (49.2/98.4)						-	
	Add gas amount g/m (oz/ft)		45g/m (0.484)						-	
	Pipe length for additional gas m (ft)		30m (98.4)						-	

*1 In case it is necessary to indicate the air flow volume in (l/s), the value in (m³/min.) shall be multiplied by 16.7 and rounded down the decimal point.
*2 If the EUROVENT Certified models can be operated under the "extra-low"temperature condition, -7°C dry bulb and -8°C wet-bulb temperatures with rated voltage 230V shall be used.
*3 Network Impedance shall be applicable for EUROPE and CHINA models.
*4 The annual consumption is calculated by multiplying the input power at 230V(400V) by an average of 500 hours per year in cooling mode.
*5 EER and COP classification is at 230V(400V) only in accordance with EU directive 2002/31/EC.
*6 $\eta_{s,c}$ and $\eta_{s,h}$ classification is at 230V(400V) only in accordance with EN-14825. For heating, $\eta_{s,h}$ indicates the value of only Average heating season.
*7 H: High at setting 5 stage (Level 5), M: Middle at setting 5 stage (Level 3), L: Low at setting 5 stage (Level 1)

Simultaneous (Twin) -Type

1-1. Unit Specifications

PZ2

1. 4-Way Cassette Type S-71PU2E5B×2 / U-140PZ2E5

INDOOR		MODEL	S-71PU2E5B ×2			-			-	
PANEL		MODEL	Standard type: CZ-KPU3×2 / ECONAVI type: CZ-KPU3A×2			-			-	
OUTDOOR		MODEL	-			U-140PZ2E5			-	
Branch pipe		MODEL	-							
Performance test condition			ISO5151 / EN14511 / EN12102 / EN14825							
Power supply		Ø, Hz	1Ø 50Hz			1Ø 50Hz				
		V	220V	230V	240V	220V	230V	240V	Min	Max
COOLING	Capacity	kW	14.0	14.0	14.0	-	-	-	3.3	15.0
		BTU/h	47800	47800	47800	-	-	-	11300	51200
	Current	A	0.40×2	0.39×2	0.38×2	20.6	19.7	18.9	-	-
	Input power	W	42×2	42×2	42×2	4.256k	4.256k	4.256k	-	-
		TOTAL W	-			4.340k	4.340k	4.340k	620	5.500k
	Annual consumption	TOTAL kWh *4	-			-	2170	-	-	-
	EER/EER CLASS	TOTAL (W/W) *5/ ("A"~"G")	-	-	-	3.23	3.23/A	3.23	5.32	2.73
	Erp *6 Pdesign	kW	-	-	-	-	14.0	-	-	-
	Erp *6 $\eta_{s.c}$	%	-	-	-	-	260.3	-	-	-
	Erp *6 Annual consumption	kWh	-	-	-	-	-	-	-	-
	Erp *6 Class		-	-	-	-	-	-	-	-
	Power factor	%	-	-	-	94	94	94	-	-
	Noise indoor	dB-A (H/M/L) *7	37/31/28			-			-	-
		Power Level dB	52/46/43			-			-	-
	Noise outdoor	dB-A (H/L)	-			56/-			-	-
		Power Level dB	-			74/-			-	-
HEATING	Capacity	kW	14.0	14.0	14.0	-	-	-	3.4	16.0
		BTU/h	47800	47800	47800	-	-	-	11600	54600
	Current	A	0.39×2	0.38×2	0.37×2	15.8	15.1	14.5	-	-
	Input power	W	40×2	40×2	40×2	3.270k	3.270k	3.270k	-	-
		TOTAL W	-			3.350k	3.350k	3.350k	620	4.800k
	COP/COP CLASS	TOTAL (W/W) *5/ ("A"~"G")	-	-	-	4.18	4.18/A	4.18	5.48	3.33
	Erp *6 Pdesign at -10°C	kW	-	-	-	-	14.0	-	-	-
	Erp *6 Tbivalent	°C	-	-	-	-	-7	-	-	-
	Erp *6 $\eta_{s.h}$	%	-	-	-	-	152.5	-	-	-
	Erp *6 Annual consumption	kWh	-	-	-	-	-	-	-	-
	Erp *6 elbu(-10°C)	kW	-	-	-	-	3.30	-	-	-
	Erp *6 Class		-	-	-	-	-	-	-	-
	Power factor	%	-	-	-	94	94	94	-	-
	Noise indoor	dB-A (H/M/L) *7	37/31/28			-			-	-
		Power Level dB	52/46/43						-	-
	Noise outdoor	dB-A (H/L)	-			56/-			-	-
		Power Level dB	-			74/-			-	-
EXTRA LOW TEMP	Total capacity(kW) / Input power(W) / COP		-						-	
Max Current(A) / Max Input power(W)			0.40×2/42×2	0.39×2/42×2	0.38×2/42×2	30.0/6.25k	30.0/6.50k	30.0/6.80k	-	
Starting current(A) (Cooling/Heating)			-	-	-	20.6/15.8	19.7/15.1	18.9/14.5	-	
Comp output(W)			-			3.00k	3.00k	3.00k		
Network Impedance(ΩMAX.)			-			-			-	
Fan motor output (Indoor/Outdoor) W			60			120			-	
Moisture removal volume		L/h(Pt/h)	5.0	(2.5×2)	(10.6)	-			-	
External static pressure		Pa	-			-			-	
Indoor Air flow *7	Cooling	m³/min (ft³/min)	22.0×2/16.0×2/13.0×2 (777)×2/(565)×2/(459)×2			-			-	-
	Heating	m³/min (ft³/min)	22.0×2/16.0×2/13.0×2 (777)×2/(565)×2/(459)×2			-			-	-
Outdoor Air flow	Cooling	m³/min (ft³/min)	-			89.0 (3143)			-	-
	Heating	m³/min (ft³/min)	-			83.0 (2931)			-	-
Refrigerant type / amount g(oz)			-			R32	2.98k	(105.1)	-	
Product dimension		Height mm(inch)	256 (10-5/64)			996 (39- 7/32)			-	
		Width mm(inch)	840 (33-5/64)			980 (38-37/64)			-	
		Depth mm(inch)	840 (33-5/64)			370 (14- 9/16)			-	
Product dimension (Panel)		H×W×D mm, inch	33.5×950×950 (1-11/32×37-13/32×37-13/32)			-			-	
Packing dimension		Height mm(inch)	302 (11-57/64)			1134 (44-41/64)			-	
		Width mm(inch)	898 (35-3/8)			1095 (43-7/64)			-	
		Depth mm(inch)	898 (35-3/8)			529 (20-53/64)			-	
Weight		(NET) kg(lb)	20 (44)			94 (207)			-	
		(GROSS) kg(lb)	27 (60)			102 (224)			-	
		Panel (NET) kg(lb)	5 (11)			-			-	
Layers limit (actually)			11 (12)			2 (3)			-	
Operation condition		Cool (DBT)	18°C ~ 32°C			-10°C ~ 43°C			-	
		Heat (DBT)	16°C ~ 30°C			-15°C ~ 24°C			-	
MAX WORKING PRESSURE HP/LP MPa (bar)			4.15/2.55 (41.5/25.5)						-	
PIPING	Pipe diameter mm (inch)		(Liquid)Ø9.52(3/8) (Gas)Ø15.88(5/8)			(Liquid)Ø9.52(3/8) (Gas)Ø15.88(5/8)			-	
	Connecting method, Standard length m(ft)		flared type, 5.0(16.4)			flared type, 5.0(16.4)			-	
	Pipe length range m (ft)		5 ~ 50m (16.4 ~ 164.0)						-	
	Indoor unit & Outdoor unit height difference m (ft)		15m(OD located lower)/30m(OD located higher) (49.2/98.4)						-	
	Add gas amount g/m (oz/ft)		45g/m (0.484)						-	
	Pipe length for additional gas m (ft)		30m (98.4)						-	

*1 In case it is necessary to indicate the air flow volume in (l/s), the value in (m³/min.) shall be multiplied by 16.7 and rounded down the decimal point.
*2 If the EUROVENT Certified models can be operated under the "extra-low"temperature condition, -7°C dry bulb and -8°C wet-bulb temperatures with rated voltage 230V shall be used.
*3 Network Impedance shall be applicable for EUROPE and CHINA models.
*4 The annual consumption is calculated by multiplying the input power at 230V(400V) by an average of 500 hours per year in cooling mode.
*5 EER and COP classification is at 230V(400V) only in accordance with EU directive 2002/31/EC.
*6 $\eta_{s.c}$ and $\eta_{s.h}$ classification is at 230V(400V) only in accordance with EN-14825. For heating, $\eta_{s.h}$ indicates the value of only Average heating season.
*7 H: High at setting 5 stage (Level 5), M: Middle at setting 5 stage (Level 3), L: Low at setting 5 stage (Level 1)

Single-Type

1-1. Unit Specifications

PZ2

1. 4-Way Cassette Type S-100PU2E5B / U-100PZ2E5

INDOOR		MODEL	S-100PU2E5B			-			-	
PANEL		MODEL	Standard type: CZ-KPU3 / ECONAVI type: CZ-KPU3A			-			-	
OUTDOOR		MODEL	-			U-100PZ2E5			-	
Branch pipe		MODEL	-							
Performance test condition			ISO5151 / EN14511 / EN12102 / EN14825							
Power supply		Ø, Hz	1Ø 50Hz			1Ø 50Hz				
		V	220V	230V	240V	220V	230V	240V	Min	Max
COOLING	Capacity	kW	10.0	10.0	10.0	-	-	-	3.0	11.5
		BTU/h	34100	34100	34100	-	-	-	10200	39200
	Current	A	0.82	0.79	0.76	12.1	11.5	11.1	-	-
	Input power	W	100	100	100	2.520k	2.520k	2.520k	-	-
		TOTAL W	-			2.620k	2.620k	2.620k	560	4.000k
	Annual consumption	TOTAL kWh *4	-			-	1310	-	-	-
	EER/EER CLASS	TOTAL (W/W) *5/ ("A"~"G")	-	-	-	3.82	3.82/A	3.82	5.36	2.88
	Erp *6 Pdesign	kW	-	-	-	-	10.0	-	-	-
	Erp *6 SEER	(W/W)	-	-	-	-	6.8	-	-	-
	Erp *6 Annual consumption	kWh	-	-	-	-	515	-	-	-
	Erp *6 Class		-	-	-	-	A++	-	-	-
	Power factor	%	-	-	-	95	95	95	-	-
	Noise indoor	dB-A (H/M/L) *7	45/38/32			-			-	-
		Power Level dB	60/53/47			-			-	-
	Noise outdoor	dB-A (H/L)	-			52/-			-	-
		Power Level dB	-			70/-			-	-
HEATING	Capacity	kW	10.0	10.0	10.0	-	-	-	3.0	14.0
		BTU/h	34100	34100	34100	-	-	-	10200	47800
	Current	A	0.81	0.78	0.75	9.25	8.85	8.50	-	-
	Input power	W	95	95	95	1.935k	1.935k	1.935k	-	-
		TOTAL W	-			2.030k	2.030k	2.030k	560	3.900k
	COP/COP CLASS	TOTAL (W/W) *5/ ("A"~"G")	-	-	-	4.93	4.93/A	4.93	5.36	3.59
	Erp *6 Pdesign at -10°C	kW	-	-	-	-	10.0	-	-	-
	Erp *6 Tbivalent	°C	-	-	-	-	-10	-	-	-
	Erp *6 SCOP	(W/W)	-	-	-	-	4.4	-	-	-
	Erp *6 Annual consumption	kWh	-	-	-	-	3182	-	-	-
	Erp *6 elbu(-10°C)	kW	-	-	-	-	0.00	-	-	-
	Erp *6 Class		-	-	-	-	A+	-	-	-
	Power factor	%	-	-	-	95	95	95	-	-
	Noise indoor	dB-A (H/M/L) *7	45/38/32			-			-	-
		Power Level dB	60/53/47			-			-	-
	Noise outdoor	dB-A (H/L)	-			52/-			-	-
		Power Level dB	-			70/-			-	-
EXTRA LOW TEMP	Total capacity(kW) / Input power(W) / COP		-						-	
Max Current(A) / Max Input power(W)			0.82/100	0.79/100	0.76/100	25.0/5.25k	25.0/5.50k	25.0/5.70k	-	
Starting current(A) (Cooling/Heating)			-	-	-	12.1/9.25	11.5/8.85	11.1/8.50	-	
Comp output(W)						2.50k	2.50k	2.50k		
Network Impedance(ΩMAX.)			-			-			-	
Fan motor output (Indoor/Outdoor) W			90			120			-	
Moisture removal volume		L/h(Pt/h)	2.7		(5.7)	-			-	
External static pressure		Pa	-			-			-	
Indoor Air flow *7	Cooling	m³/min (ft³/min)	36.0/26.0/18.0 (1271)/(918)/(636)			-			-	-
	Heating	m³/min (ft³/min)	36.0/26.0/18.0 (1271)/(918)/(636)			-			-	-
Outdoor Air flow	Cooling	m³/min (ft³/min)	-			76.0 (2683)			-	-
	Heating	m³/min (ft³/min)	-			70.0 (2472)			-	-
Refrigerant type / amount g(oz)			-			R32 2.60k (91.7)			-	
Product dimension		Height mm(inch)	319 (12-9/16)			996 (39- 7/32)			-	
		Width mm(inch)	840 (33-5/64)			980 (38-37/64)			-	
		Depth mm(inch)	840 (33-5/64)			370 (14- 9/16)			-	
Product dimension (Panel)		H×W×D mm, inch	33.5×950×950 (1-11/32×37-13/32×37-13/32)			-			-	
Packing dimension		Height mm(inch)	365 (14-3/8)			1134 (44-41/64)			-	
		Width mm(inch)	898 (35-3/8)			1095 (43-7/64)			-	
		Depth mm(inch)	898 (35-3/8)			529 (20-53/64)			-	
Weight		(NET) kg(lb)	25 (55)			90 (199)			-	
		(GROSS) kg(lb)	32 (71)			98 (216)			-	
		Panel (NET) kg(lb)	5 (11)			-			-	
Layers limit (actually)			11 (12)			2 (3)			-	
Operation condition		Cool (DBT)	18°C ~ 32°C			-10°C ~ 43°C			-	
		Heat (DBT)	16°C ~ 30°C			-15°C ~ 24°C			-	
MAX WORKING PRESSURE HP/LP MPa (bar)			4.15/2.55 (41.5/25.5)						-	
PIPING	Pipe diameter mm (inch)		(Liquid)Ø9.52(3/8) (Gas)Ø15.88(5/8)			(Liquid)Ø9.52(3/8) (Gas)Ø15.88(5/8)			-	
	Connecting method, Standard length m(ft)		flared type, 5.0(16.4)			flared type, 5.0(16.4)			-	
	Pipe length range m (ft)		5 ~ 50m (16.4 ~ 164.0)						-	
	Indoor unit & Outdoor unit height difference m (ft)		15m(OD located lower)/30m(OD located higher) (49.2/98.4)						-	
	Add gas amount g/m (oz/ft)		45g/m (0.484)						-	
	Pipe length for additional gas m (ft)		30m (98.4)						-	

*1 In case it is necessary to indicate the air flow volume in (l/s), the value in (m³/min.) shall be multiplied by 16.7 and rounded down the decimal point.
*2 If the EUROVENT Certified models can be operated under the "extra-low"temperature condition, -7°C dry bulb and -8°C wet-bulb temperatures with rated voltage 230V shall be used.
*3 Network Impedance shall be applicable for EUROPE and CHINA models.
*4 The annual consumption is calculated by multiplying the input power at 230V(400V) by an average of 500 hours per year in cooling mode.
*5 EER and COP classification is at 230V(400V) only in accordance with EU directive 2002/31/EC.
*6 SEER and SCOP classification is at 230V(400V) only in accordance with EN-14825. For heating, SCOP indicates the value of only Average heating season, Other fiche data indicates in an attached sheet
*7 H: High at setting 5 stage (Level 5), M: Middle at setting 5 stage (Level 3), L: Low at setting 5 stage (Level 1)

Single-Type

1-1. Unit Specifications

PZ2

1. 4-Way Cassette Type S-125PU2E5B / U-125PZ2E5

INDOOR		MODEL	S-125PU2E5B			-			-	
PANEL		MODEL	Standard type: CZ-KPU3 / ECONAVI type: CZ-KPU3A			-			-	
OUTDOOR		MODEL	-			U-125PZ2E5			-	
Branch pipe		MODEL	-							
Performance test condition			ISO5151 / EN14511 / EN12102 / EN14825							
Power supply		Ø, Hz	1Ø 50Hz			1Ø 50Hz				
		V	220V	230V	240V	220V	230V	240V	Min	Max
COOLING	Capacity	kW	12.5	12.5	12.5	-	-	-	3.2	13.5
		BTU/h	42700	42700	42700	-	-	-	10900	46100
	Current	A	0.91	0.88	0.85	16.3	15.6	15.0	-	-
	Input power	W	110	110	110	3.380k	3.380k	3.380k	-	-
		TOTAL W	-			3.490k	3.490k	3.490k	600	4.800k
	Annual consumption	TOTAL kWh *4	-			-	1745	-	-	-
	EER/EER CLASS	TOTAL (W/W) *5/ ("A"~"G")	-	-	-	3.58	3.58/A	3.58	5.33	2.81
	Erp *6 Pdesign	kW	-	-	-	-	12.5	-	-	-
	Erp *6 $\eta_{s,c}$	%	-	-	-	-	267.1	-	-	-
	Erp *6 Annual consumption	kWh	-	-	-	-	-	-	-	-
	Erp *6 Class		-	-	-	-	-	-	-	-
	Power factor	%	-	-	-	94	94	94	-	-
	Noise indoor	dB-A (H/M/L) *7	46/39/33			-			-	-
		Power Level dB	61/54/48			-			-	-
	Noise outdoor	dB-A (H/L)	-			55/-			-	-
		Power Level dB	-			73/-			-	-
HEATING	Capacity	kW	12.5	12.5	12.5	-	-	-	3.3	15.0
		BTU/h	42700	42700	42700	-	-	-	11300	51200
	Current	A	0.90	0.87	0.84	13.1	12.6	12.0	-	-
	Input power	W	105	105	105	2.715k	2.715k	2.715k	-	-
		TOTAL W	-			2.820k	2.820k	2.820k	600	4.200k
	COP/COP CLASS	TOTAL (W/W) *5/ ("A"~"G")	-	-	-	4.43	4.43/A	4.43	5.50	3.57
	Erp *6 Pdesign at -10°C	kW	-	-	-	-	12.5	-	-	-
	Erp *6 Tbivalent	°C	-	-	-	-	-10	-	-	-
	Erp *6 $\eta_{s,h}$	%	-	-	-	-	157.3	-	-	-
	Erp *6 Annual consumption	kWh	-	-	-	-	-	-	-	-
	Erp *6 elbu(-10°C)	kW	-	-	-	-	0.00	-	-	-
	Erp *6 Class		-	-	-	-	-	-	-	-
	Power factor	%	-	-	-	94	94	94	-	-
	Noise indoor	dB-A (H/M/L) *7	46/39/33			-			-	-
		Power Level dB	61/54/48						-	-
	Noise outdoor	dB-A (H/L)	-			55/-			-	-
		Power Level dB	-			73/-			-	-
EXTRA LOW TEMP	Total capacity(kW) / Input power(W) / COP		-						-	
Max Current(A) / Max Input power(W)			0.91/110	0.88/110	0.85/110	29.0/6.00k	29.0/6.30k	29.0/6.60k	-	
Starting current(A) (Cooling/Heating)			-	-	-	16.3/13.1	15.6/12.6	15.0/12.0	-	
Comp output(W)			-			2.80k	2.80k	2.80k		
Network Impedance(ΩMAX.)			-			-			-	
Fan motor output (Indoor/Outdoor) W			90			120			-	
Moisture removal volume		L/h(Pt/h)	4.8		(10.1)	-			-	
External static pressure		Pa	-			-			-	
Indoor Air flow *7	Cooling	m³/min (ft³/min)	37.0/27.0/19.0 (1307)/(953)/(671)			-			-	-
	Heating	m³/min (ft³/min)	37.0/27.0/19.0 (1307)/(953)/(671)			-			-	-
Outdoor Air flow	Cooling	m³/min (ft³/min)	-			86.0 (3037)			-	-
	Heating	m³/min (ft³/min)	-			78.0 (2754)			-	-
Refrigerant type / amount g(oz)			-			R32 2.98k (105.1)			-	
Product dimension		Height mm(inch)	319 (12-9/16)			996 (39- 7/32)			-	
		Width mm(inch)	840 (33-5/64)			980 (38-37/64)			-	
		Depth mm(inch)	840 (33-5/64)			370 (14- 9/16)			-	
Product dimension (Panel)		H×W×D mm, inch	33.5×950×950 (1-11/32×37-13/32×37-13/32)			-			-	
Packing dimension		Height mm(inch)	365 (14-3/8)			1134 (44-41/64)			-	
		Width mm(inch)	898 (35-3/8)			1095 (43-7/64)			-	
		Depth mm(inch)	898 (35-3/8)			529 (20-53/64)			-	
Weight		(NET) kg(lb)	25 (55)			94 (207)			-	
		(GROSS) kg(lb)	32 (71)			102 (224)			-	
		Panel (NET) kg(lb)	5 (11)			-			-	
Layers limit (actually)			11 (12)			2 (3)			-	
Operation condition		Cool (DBT)	18°C ~ 32°C			-10°C ~ 43°C			-	
		Heat (DBT)	16°C ~ 30°C			-15°C ~ 24°C			-	
MAX WORKING PRESSURE HP/LP MPa (bar)			4.15/2.55 (41.5/25.5)						-	
PIPING	Pipe diameter mm (inch)		(Liquid)Ø9.52(3/8) (Gas)Ø15.88(5/8)			(Liquid)Ø9.52(3/8) (Gas)Ø15.88(5/8)			-	
	Connecting method, Standard length m(ft)		flared type, 5.0(16.4)			flared type, 5.0(16.4)			-	
	Pipe length range m (ft)		5 ~ 50m (16.4 ~ 164.0)						-	
	Indoor unit & Outdoor unit height difference m (ft)		15m(OD located lower)/30m(OD located higher) (49.2/98.4)						-	
	Add gas amount g/m (oz/ft)		45g/m (0.484)						-	
	Pipe length for additional gas m (ft)		30m (98.4)						-	

*1 In case it is necessary to indicate the air flow volume in (l/s), the value in (m³/min.) shall be multiplied by 16.7 and rounded down the decimal point.
*2 If the EUROVENT Certified models can be operated under the "extra-low"temperature condition, -7°C dry bulb and -8°C wet-bulb temperatures with rated voltage 230V shall be used.
*3 Network Impedance shall be applicable for EUROPE and CHINA models.
*4 The annual consumption is calculated by multiplying the input power at 230V(400V) by an average of 500 hours per year in cooling mode.
*5 EER and COP classification is at 230V(400V) only in accordance with EU directive 2002/31/EC.
*6 $\eta_{s,c}$ and $\eta_{s,h}$ classification is at 230V(400V) only in accordance with EN-14825. For heating, $\eta_{s,h}$ indicates the value of only Average heating season.
*7 H: High at setting 5 stage (Level 5), M: Middle at setting 5 stage (Level 3), L: Low at setting 5 stage (Level 1)

Single-Type

1-1. Unit Specifications

PZ2

1. 4-Way Cassette Type S-140PU2E5B / U-140PZ2E5

INDOOR		MODEL	S-140PU2E5B			-			-	
PANEL		MODEL	Standard type: CZ-KPU3 / ECONAVI type: CZ-KPU3A			-			-	
OUTDOOR		MODEL	-			U-140PZ2E5			-	
Branch pipe		MODEL	-							
Performance test condition			ISO5151 / EN14511 / EN12102 / EN14825							
Power supply		Ø, Hz	1Ø 50Hz			1Ø 50Hz				
		V	220V	230V	240V	220V	230V	240V	Min	Max
COOLING	Capacity	kW	14.0	14.0	14.0	-	-	-	3.3	15.0
		BTU/h	47800	47800	47800	-	-	-	11300	51200
	Current	A	0.97	0.94	0.91	20.4	19.5	18.7	-	-
	Input power	W	120	120	120	4.220k	4.220k	4.220k	-	-
		TOTAL W	-			4.340k	4.340k	4.340k	620	5.500k
	Annual consumption	TOTAL kWh *4	-			-	2170	-	-	-
	EER/EER CLASS	TOTAL (W/W) *5/ ("A"~"G")	-	-	-	3.23	3.23/A	3.23	5.32	2.73
	Erp *6 Pdesign	kW	-	-	-	-	14.0	-	-	-
	Erp *6 $\eta_{s,c}$	%	-	-	-	-	257.3	-	-	-
	Erp *6 Annual consumption	kWh	-	-	-	-	-	-	-	-
	Erp *6 Class		-	-	-	-	-	-	-	-
	Power factor	%	-	-	-	94	94	94	-	-
	Noise indoor	dB-A (H/M/L) *7	47/40/34			-			-	-
		Power Level dB	62/55/49			-			-	-
	Noise outdoor	dB-A (H/L)	-			56/-			-	-
		Power Level dB	-			74/-			-	-
HEATING	Capacity	kW	14.0	14.0	14.0	-	-	-	3.4	16.0
		BTU/h	47800	47800	47800	-	-	-	11600	54600
	Current	A	0.96	0.93	0.90	15.6	15.0	14.3	-	-
	Input power	W	115	115	115	3.235k	3.235k	3.235k	-	-
		TOTAL W	-			3.350k	3.350k	3.350k	620	4.800k
	COP/COP CLASS	TOTAL (W/W) *5/ ("A"~"G")	-	-	-	4.18	4.18/A	4.18	5.48	3.33
	Erp *6 Pdesign at -10°C	kW	-	-	-	-	14.0	-	-	-
	Erp *6 Tbivalent	°C	-	-	-	-	-7	-	-	-
	Erp *6 $\eta_{s,h}$	%	-	-	-	-	152.4	-	-	-
	Erp *6 Annual consumption	kWh	-	-	-	-	-	-	-	-
	Erp *6 elbu(-10°C)	kW	-	-	-	-	3.10	-	-	-
	Erp *6 Class		-	-	-	-	-	-	-	-
	Power factor	%	-	-	-	94	94	94	-	-
	Noise indoor	dB-A (H/M/L) *7	47/40/34			-			-	-
		Power Level dB	62/55/49						-	-
	Noise outdoor	dB-A (H/L)	-			56/-			-	-
		Power Level dB	-			74/-			-	-
EXTRA LOW TEMP	Total capacity(kW) / Input power(W) / COP		-						-	
Max Current(A) / Max Input power(W)			0.97/120	0.94/120	0.91/120	30.0/6.25k	30.0/6.50k	30.0/6.80k	-	
Starting current(A) (Cooling/Heating)			-	-	-	20.4/15.6	19.5/15.0	18.7/14.3	-	
Comp output(W)			-			3.00k	3.00k	3.00k		
Network Impedance(ΩMAX.)			-			-			-	
Fan motor output (Indoor/Outdoor) W			90			120			-	
Moisture removal volume		L/h(Pt/h)	6.0		(12.6)	-			-	
External static pressure		Pa	-			-			-	
Indoor Air flow *7	Cooling	m³/min (ft³/min)	38.0/29.0/20.0 (1342)/(1024)/(706)			-			-	-
	Heating	m³/min (ft³/min)	38.0/29.0/20.0 (1342)/(1024)/(706)			-			-	-
Outdoor Air flow	Cooling	m³/min (ft³/min)	-			89.0 (3143)			-	-
	Heating	m³/min (ft³/min)	-			83.0 (2931)			-	-
Refrigerant type / amount g(oz)			-			R32 2.98k (105.1)			-	
Product dimension		Height mm(inch)	319 (12-9/16)			996 (39- 7/32)			-	
		Width mm(inch)	840 (33-5/64)			980 (38-37/64)			-	
		Depth mm(inch)	840 (33-5/64)			370 (14- 9/16)			-	
Product dimension (Panel)		H×W×D mm, inch	33.5×950×950 (1-11/32×37-13/32×37-13/32)			-			-	
Packing dimension		Height mm(inch)	365 (14-3/8)			1134 (44-41/64)			-	
		Width mm(inch)	898 (35-3/8)			1095 (43-7/64)			-	
		Depth mm(inch)	898 (35-3/8)			529 (20-53/64)			-	
Weight		(NET) kg(lb)	25 (55)			94 (207)			-	
		(GROSS) kg(lb)	32 (71)			102 (224)			-	
		Panel (NET) kg(lb)	5 (11)			-			-	
Layers limit (actually)			11 (12)			2 (3)			-	
Operation condition		Cool (DBT)	18°C ~ 32°C			-10°C ~ 43°C			-	
		Heat (DBT)	16°C ~ 30°C			-15°C ~ 24°C			-	
MAX WORKING PRESSURE HP/LP MPa (bar)			4.15/2.55 (41.5/25.5)						-	
PIPING	Pipe diameter mm (inch)		(Liquid)Ø9.52(3/8) (Gas)Ø15.88(5/8)			(Liquid)Ø9.52(3/8) (Gas)Ø15.88(5/8)			-	
	Connecting method, Standard length m(ft)		flared type, 5.0(16.4)			flared type, 5.0(16.4)			-	
	Pipe length range m (ft)		5 ~ 50m (16.4 ~ 164.0)						-	
	Indoor unit & Outdoor unit height difference m (ft)		15m(OD located lower)/30m(OD located higher) (49.2/98.4)						-	
	Add gas amount g/m (oz/ft)		45g/m (0.484)						-	
	Pipe length for additional gas m (ft)		30m (98.4)						-	

*1 In case it is necessary to indicate the air flow volume in (l/s), the value in (m³/min.) shall be multiplied by 16.7 and rounded down the decimal point.
*2 If the EUROVENT Certified models can be operated under the "extra-low"temperature condition, -7°C dry bulb and -8°C wet-bulb temperatures with rated voltage 230V shall be used.
*3 Network Impedance shall be applicable for EUROPE and CHINA models.
*4 The annual consumption is calculated by multiplying the input power at 230V(400V) by an average of 500 hours per year in cooling mode.
*5 EER and COP classification is at 230V(400V) only in accordance with EU directive 2002/31/EC.
*6 $\eta_{s,c}$ and $\eta_{s,h}$ classification is at 230V(400V) only in accordance with EN-14825. For heating, $\eta_{s,h}$ indicates the value of only Average heating season.
*7 H: High at setting 5 stage (Level 5), M: Middle at setting 5 stage (Level 3), L: Low at setting 5 stage (Level 1)

Simultaneous (Twin) -Type

1-1. Unit Specifications

PZ2

1. 4-Way Cassette Type S-50PU2E5B×2 / U-100PZ2E8

INDOOR		MODEL	S-50PU2E5B ×2			-			-	
PANEL		MODEL	Standard type: CZ-KPU3×2 / ECONAVI type: CZ-KPU3A×2			-			-	
OUTDOOR		MODEL	-			U-100PZ2E8			-	
Branch pipe		MODEL	-							
Performance test condition			ISO5151 / EN14511 / EN12102 / EN14825							
Power supply		Ø, Hz	1Ø 50Hz			3Ø 50Hz				
		V	220V	230V	240V	380V	400V	415V	Min	Max
COOLING	Capacity	kW	10.0	10.0	10.0	-	-	-	3.0	11.5
		BTU/h	34100	34100	34100	-	-	-	10200	39200
	Current	A	0.27×2	0.26×2	0.25×2	4.20	3.95	3.85	-	-
	Input power	W	29×2	29×2	29×2	2.562k	2.562k	2.562k	-	-
		TOTAL W	-			2.620k	2.620k	2.620k	560	4.000k
	Annual consumption	TOTAL kWh *4	-			-	1310	-	-	-
	EER/EER CLASS	TOTAL (W/W) *5/ ("A"~"G")	-	-	-	3.82	3.82/A	3.82	5.36	2.88
	Erp *6 Pdesign	kW	-	-	-	-	10.0	-	-	-
	Erp *6 SEER	(W/W)	-	-	-	-	6.7	-	-	-
	Erp *6 Annual consumption	kWh	-	-	-	-	521	-	-	-
	Erp *6 Class		-	-	-	-	A++	-	-	-
	Power factor	%	-	-	-	93	93	93	-	-
	Noise indoor	dB-A (H/M/L) *7	32/29/27			-			-	-
		Power Level dB	47/44/42			-			-	-
	Noise outdoor	dB-A (H/L)	-			52/-			-	-
		Power Level dB	-			70/-			-	-
HEATING	Capacity	kW	10.0	10.0	10.0	-	-	-	3.0	14.0
		BTU/h	34100	34100	34100	-	-	-	10200	47800
	Current	A	0.26×2	0.25×2	0.24×2	3.20	3.05	2.95	-	-
	Input power	W	27×2	27×2	27×2	1.976k	1.976k	1.976k	-	-
		TOTAL W	-			2.030k	2.030k	2.030k	560	3.900k
	COP/COP CLASS	TOTAL (W/W) *5/ ("A"~"G")	-	-	-	4.93	4.93/A	4.93	5.36	3.59
	Erp *6 Pdesign at -10°C	kW	-	-	-	-	10.0	-	-	-
	Erp *6 Tbivalent	°C	-	-	-	-	-10	-	-	-
	Erp *6 SCOP	(W/W)	-	-	-	-	4.4	-	-	-
	Erp *6 Annual consumption	kWh	-	-	-	-	3182	-	-	-
	Erp *6 elbu(-10°C)	kW	-	-	-	-	0.00	-	-	-
	Erp *6 Class		-	-	-	-	A+	-	-	-
	Power factor	%	-	-	-	93	93	93	-	-
	Noise indoor	dB-A (H/M/L) *7	32/29/27			-			-	-
		Power Level dB	47/44/42			-			-	-
	Noise outdoor	dB-A (H/L)	-			52/-			-	-
		Power Level dB	-			70/-			-	-
EXTRA LOW TEMP	Total capacity(kW) / Input power(W) / COP		-						-	
Max Current(A) / Max Input power(W)			0.27×2/29×2	0.26×2/29×2	0.25×2/29×2	9.00/5.55k	9.00/5.80k	9.00/6.05k	-	
Starting current(A) (Cooling/Heating)			-	-	-	4.20/3.20	3.95/3.05	3.85/2.95	-	
Comp output(W)						2.50k	2.50k	2.50k		
Network Impedance(ΩMAX.)			-			-			-	
Fan motor output (Indoor/Outdoor) W			60			120			-	
Moisture removal volume		L/h(Pt/h)	3.2	(1.6×2)	(6.8)	-			-	
External static pressure		Pa	-			-			-	
Indoor Air flow *7	Cooling	m³/min (ft³/min)	16.5×2/13.5×2/11.5×2 (583)×2/(477)×2/(406)×2			-			-	-
	Heating	m³/min (ft³/min)	16.5×2/13.5×2/11.5×2 (583)×2/(477)×2/(406)×2			-			-	-
Outdoor Air flow	Cooling	m³/min (ft³/min)	-			76.0 (2683)			-	-
	Heating	m³/min (ft³/min)	-			70.0 (2472)			-	-
Refrigerant type / amount g(oz)			-			R32	2.60k	(91.7)	-	
Product dimension		Height mm(inch)	256 (10-5/64)			996 (39- 7/32)			-	
		Width mm(inch)	840 (33-5/64)			980 (38-37/64)			-	
		Depth mm(inch)	840 (33-5/64)			370 (14- 9/16)			-	
Product dimension (Panel)		H×W×D mm, inch	33.5×950×950 (1-11/32×37-13/32×37-13/32)			-			-	
Packing dimension		Height mm(inch)	302 (11-57/64)			1134 (44-41/64)			-	
		Width mm(inch)	898 (35-3/8)			1095 (43-7/64)			-	
		Depth mm(inch)	898 (35-3/8)			529 (20-53/64)			-	
Weight		(NET) kg(lb)	19 (42)			90 (199)			-	
		(GROSS) kg(lb)	26 (57)			98 (216)			-	
		Panel (NET) kg(lb)	5 (11)			-			-	
Layers limit (actually)			11 (12)			2 (3)			-	
Operation condition		Cool (DBT)	18°C ~ 32°C			-10°C ~ 43°C			-	
		Heat (DBT)	16°C ~ 30°C			-15°C ~ 24°C			-	
MAX WORKING PRESSURE HP/LP MPa (bar)			4.15/2.55 (41.5/25.5)						-	
PIPING	Pipe diameter mm (inch)		(Liquid)Ø6.35(1/4) (Gas)Ø12.7(1/2)			(Liquid)Ø9.52(3/8) (Gas)Ø15.88(5/8)			-	
	Connecting method, Standard length m(ft)		flared type, 5.0(16.4)			flared type, 5.0(16.4)			-	
	Pipe length range m (ft)		5 ~ 50m (16.4 ~ 164.0)						-	
	Indoor unit & Outdoor unit height difference m (ft)		15m(OD located lower)/30m(OD located higher) (49.2/98.4)						-	
	Add gas amount g/m (oz/ft)		45g/m (0.484)						-	
	Pipe length for additional gas m (ft)		30m (98.4)						-	

*1 In case it is necessary to indicate the air flow volume in (l/s), the value in (m³/min.) shall be multiplied by 16.7 and rounded down the decimal point.
*2 If the EUROVENT Certified models can be operated under the "extra-low"temperature condition, -7°C dry bulb and -8°C wet-bulb temperatures with rated voltage 230V shall be used.
*3 Network Impedance shall be applicable for EUROPE and CHINA models.
*4 The annual consumption is calculated by multiplying the input power at 230V(400V) by an average of 500 hours per year in cooling mode.
*5 EER and COP classification is at 230V(400V) only in accordance with EU directive 2002/31/EC.
*6 SEER and SCOP classification is at 230V(400V) only in accordance with EN-14825. For heating, SCOP indicates the value of only Average heating season, Other fiche data indicates in an attached sheet
*7 H: High at setting 5 stage (Level 5), M: Middle at setting 5 stage (Level 3), L: Low at setting 5 stage (Level 1)

Simultaneous (Twin) -Type

1-1. Unit Specifications

PZ2

1. 4-Way Cassette Type S-60PU2E5B×2 / U-125PZ2E8

INDOOR		MODEL	S-60PU2E5B ×2			-			-	
PANEL		MODEL	Standard type: CZ-KPU3×2 / ECONAVI type: CZ-KPU3A×2			-			-	
OUTDOOR		MODEL	-			U-125PZ2E8			-	
Branch pipe		MODEL	-							
Performance test condition			ISO5151 / EN14511 / EN12102 / EN14825							
Power supply		Ø, Hz	1Ø 50Hz			3Ø 50Hz				
		V	220V	230V	240V	380V	400V	415V	Min	Max
COOLING	Capacity	kW	12.5	12.5	12.5	-	-	-	3.2	13.5
		BTU/h	42700	42700	42700	-	-	-	10900	46100
	Current	A	0.36×2	0.35×2	0.34×2	5.50	5.25	5.05	-	-
	Input power	W	38×2	38×2	38×2	3.414k	3.414k	3.414k	-	-
		TOTAL W	-			3.490k	3.490k	3.490k	600	4.800k
	Annual consumption	TOTAL kWh *4	-			-	1745	-	-	-
	EER/EER CLASS	TOTAL (W/W) *5/ ("A"~"G")	-	-	-	3.58	3.58/A	3.58	5.33	2.81
	Erp *6 Pdesign	kW	-	-	-	-	12.5	-	-	-
	Erp *6 $\eta_{s.c}$	%	-	-	-	-	269.8	-	-	-
	Erp *6 Annual consumption	kWh	-	-	-	-	-	-	-	-
	Erp *6 Class		-	-	-	-	-	-	-	-
	Power factor	%	-	-	-	94	94	94	-	-
	Noise indoor	dB-A (H/M/L) *7	36/31/28			-			-	-
		Power Level dB	51/46/43			-			-	-
	Noise outdoor	dB-A (H/L)	-			55/-			-	-
		Power Level dB	-			73/-			-	-
HEATING	Capacity	kW	12.5	12.5	12.5	-	-	-	3.3	15.0
		BTU/h	42700	42700	42700	-	-	-	11300	51200
	Current	A	0.35×2	0.34×2	0.33×2	4.45	4.20	4.05	-	-
	Input power	W	36×2	36×2	36×2	2.748k	2.748k	2.748k	-	-
		TOTAL W	-			2.820k	2.820k	2.820k	600	4.200k
	COP/COP CLASS	TOTAL (W/W) *5/ ("A"~"G")	-	-	-	4.43	4.43/A	4.43	5.50	3.57
	Erp *6 Pdesign at -10°C	kW	-	-	-	-	12.5	-	-	-
	Erp *6 Tbivalent	°C	-	-	-	-	-10	-	-	-
	Erp *6 $\eta_{s.h}$	%	-	-	-	-	157.4	-	-	-
	Erp *6 Annual consumption	kWh	-	-	-	-	-	-	-	-
	Erp *6 elbu(-10°C)	kW	-	-	-	-	0.00	-	-	-
	Erp *6 Class		-	-	-	-	-	-	-	-
	Power factor	%	-	-	-	94	94	94	-	-
	Noise indoor	dB-A (H/M/L) *7	36/31/28			-			-	-
		Power Level dB	51/46/43						-	-
	Noise outdoor	dB-A (H/L)	-			55/-			-	-
		Power Level dB	-			73/-			-	-
EXTRA LOW TEMP	Total capacity(kW) / Input power(W) / COP		-						-	
Max Current(A) / Max Input power(W)			0.36×2/38×2	0.35×2/38×2	0.34×2/38×2	10.0/6.20k	10.0/6.50k	10.0/6.75k	-	
Starting current(A) (Cooling/Heating)			-	-	-	5.50/4.45	5.25/4.20	5.05/4.05	-	
Comp output(W)			-			2.80k	2.80k	2.80k		
Network Impedance(ΩMAX.)			-			-			-	
Fan motor output (Indoor/Outdoor) W			60			120			-	
Moisture removal volume		L/h(Pt/h)	3.4	(1.7×2)	(7.2)	-			-	
External static pressure		Pa	-			-			-	
Indoor Air flow *7	Cooling	m³/min (ft³/min)	21.0×2/16.0×2/13.0×2 (742)×2/(565)×2/(459)×2			-			-	-
	Heating	m³/min (ft³/min)	21.0×2/16.0×2/13.0×2 (742)×2/(565)×2/(459)×2			-			-	-
Outdoor Air flow	Cooling	m³/min (ft³/min)	-			86.0 (3037)			-	-
	Heating	m³/min (ft³/min)	-			78.0 (2754)			-	-
Refrigerant type / amount g(oz)			-			R32	2.98k	(105.1)	-	
Product dimension		Height mm(inch)	256 (10-5/64)			996 (39- 7/32)			-	
		Width mm(inch)	840 (33-5/64)			980 (38-37/64)			-	
		Depth mm(inch)	840 (33-5/64)			370 (14- 9/16)			-	
Product dimension (Panel)		H×W×D mm, inch	33.5×950×950 (1-11/32×37-13/32×37-13/32)			-			-	
Packing dimension		Height mm(inch)	302 (11-57/64)			1134 (44-41/64)			-	
		Width mm(inch)	898 (35-3/8)			1095 (43-7/64)			-	
		Depth mm(inch)	898 (35-3/8)			529 (20-53/64)			-	
Weight		(NET) kg(lb)	20 (44)			94 (207)			-	
		(GROSS) kg(lb)	27 (60)			102 (224)			-	
		Panel (NET) kg(lb)	5 (11)			-			-	
Layers limit (actually)			11 (12)			2 (3)			-	
Operation condition		Cool (DBT)	18°C ~ 32°C			-10°C ~ 43°C			-	
		Heat (DBT)	16°C ~ 30°C			-15°C ~ 24°C			-	
MAX WORKING PRESSURE HP/LP MPa (bar)			4.15/2.55 (41.5/25.5)						-	
PIPING	Pipe diameter mm (inch)		(Liquid)Ø9.52(3/8) (Gas)Ø15.88(5/8)			(Liquid)Ø9.52(3/8) (Gas)Ø15.88(5/8)			-	
	Connecting method, Standard length m(ft)		flared type, 5.0(16.4)			flared type, 5.0(16.4)			-	
	Pipe length range m (ft)		5 ~ 50m (16.4 ~ 164.0)						-	
	Indoor unit & Outdoor unit height difference m (ft)		15m(OD located lower)/30m(OD located higher) (49.2/98.4)						-	
	Add gas amount g/m (oz/ft)		45g/m (0.484)						-	
	Pipe length for additional gas m (ft)		30m (98.4)						-	

*1 In case it is necessary to indicate the air flow volume in (l/s), the value in (m³/min.) shall be multiplied by 16.7 and rounded down the decimal point.
*2 If the EUROVENT Certified models can be operated under the "extra-low"temperature condition, -7°C dry bulb and -8°C wet-bulb temperatures with rated voltage 230V shall be used.
*3 Network Impedance shall be applicable for EUROPE and CHINA models.
*4 The annual consumption is calculated by multiplying the input power at 230V(400V) by an average of 500 hours per year in cooling mode.
*5 EER and COP classification is at 230V(400V) only in accordance with EU directive 2002/31/EC.
*6 $\eta_{s.c}$ and $\eta_{s.h}$ classification is at 230V(400V) only in accordance with EN-14825. For heating, $\eta_{s.h}$ indicates the value of only Average heating season.
*7 H: High at setting 5 stage (Level 5), M: Middle at setting 5 stage (Level 3), L: Low at setting 5 stage (Level 1)

Simultaneous (Twin) -Type

1-1. Unit Specifications

PZ2

1. 4-Way Cassette Type S-71PU2E5B×2 / U-140PZ2E8

INDOOR		MODEL	S-71PU2E5B ×2			-			-	
PANEL		MODEL	Standard type: CZ-KPU3×2 / ECONAVI type: CZ-KPU3A×2			-			-	
OUTDOOR		MODEL	-			U-140PZ2E8			-	
Branch pipe		MODEL	-							
Performance test condition			ISO5151 / EN14511 / EN12102 / EN14825							
Power supply		Ø, Hz	1Ø 50Hz			3Ø 50Hz				
		V	220V	230V	240V	380V	400V	415V	Min	Max
COOLING	Capacity	kW	14.0	14.0	14.0	-	-	-	3.3	15.0
		BTU/h	47800	47800	47800	-	-	-	11300	51200
	Current	A	0.40×2	0.39×2	0.38×2	6.90	6.55	6.30	-	-
	Input power	W	42×2	42×2	42×2	4.256k	4.256k	4.256k	-	-
		TOTAL W	-			4.340k	4.340k	4.340k	620	5.500k
	Annual consumption	TOTAL kWh *4	-			-	2170	-	-	-
	EER/EER CLASS	TOTAL (W/W) *5/ ("A"~"G")	-	-	-	3.23	3.23/A	3.23	5.32	2.73
	Erp *6 Pdesign	kW	-	-	-	-	14.0	-	-	-
	Erp *6 $\eta_{s.c}$	%	-	-	-	-	259.4	-	-	-
	Erp *6 Annual consumption	kWh	-	-	-	-	-	-	-	-
	Erp *6 Class		-	-	-	-	-	-	-	-
	Power factor	%	-	-	-	94	94	94	-	-
	Noise indoor	dB-A (H/M/L) *7	37/31/28			-			-	-
		Power Level dB	52/46/43			-			-	-
	Noise outdoor	dB-A (H/L)	-			56/-			-	-
		Power Level dB	-			74/-			-	-
HEATING	Capacity	kW	14.0	14.0	14.0	-	-	-	3.4	16.0
		BTU/h	47800	47800	47800	-	-	-	11600	54600
	Current	A	0.39×2	0.38×2	0.37×2	5.30	5.00	4.85	-	-
	Input power	W	40×2	40×2	40×2	3.270k	3.270k	3.270k	-	-
		TOTAL W	-			3.350k	3.350k	3.350k	620	4.800k
	COP/COP CLASS	TOTAL (W/W) *5/ ("A"~"G")	-	-	-	4.18	4.18/A	4.18	5.48	3.33
	Erp *6 Pdesign at -10°C	kW	-	-	-	-	14.0	-	-	-
	Erp *6 Tbivalent	°C	-	-	-	-	-7	-	-	-
	Erp *6 $\eta_{s.h}$	%	-	-	-	-	152.5	-	-	-
	Erp *6 Annual consumption	kWh	-	-	-	-	-	-	-	-
	Erp *6 elbu(-10°C)	kW	-	-	-	-	3.30	-	-	-
	Erp *6 Class		-	-	-	-	-	-	-	-
	Power factor	%	-	-	-	94	94	94	-	-
	Noise indoor	dB-A (H/M/L) *7	37/31/28			-			-	-
		Power Level dB	52/46/43						-	-
	Noise outdoor	dB-A (H/L)	-			56/-			-	-
		Power Level dB	-			74/-			-	-
EXTRA LOW TEMP	Total capacity(kW) / Input power(W) / COP		-						-	
Max Current(A) / Max Input power(W)			0.40×2/42×2	0.39×2/42×2	0.38×2/42×2	10.5/6.50k	10.5/6.85k	10.5/7.10k	-	
Starting current(A) (Cooling/Heating)			-	-	-	6.90/5.30	6.55/5.00	6.30/4.85	-	
Comp output(W)			-			3.00k	3.00k	3.00k		
Network Impedance(ΩMAX.)			-			-			-	
Fan motor output (Indoor/Outdoor) W			60			120			-	
Moisture removal volume		L/h(Pt/h)	5.0	(2.5×2)	(10.6)	-			-	
External static pressure		Pa	-			-			-	
Indoor Air flow *7	Cooling	m³/min (ft³/min)	22.0×2/16.0×2/13.0×2 (777)×2/(565)×2/(459)×2			-			-	-
	Heating	m³/min (ft³/min)	22.0×2/16.0×2/13.0×2 (777)×2/(565)×2/(459)×2			-			-	-
Outdoor Air flow	Cooling	m³/min (ft³/min)	-			89.0 (3143)			-	-
	Heating	m³/min (ft³/min)	-			83.0 (2931)			-	-
Refrigerant type / amount g(oz)			-			R32	2.98k	(105.1)	-	
Product dimension		Height mm(inch)	256 (10-5/64)			996 (39- 7/32)			-	
		Width mm(inch)	840 (33-5/64)			980 (38-37/64)			-	
		Depth mm(inch)	840 (33-5/64)			370 (14- 9/16)			-	
Product dimension (Panel)		H×W×D mm, inch	33.5×950×950 (1-11/32×37-13/32×37-13/32)			-			-	
Packing dimension		Height mm(inch)	302 (11-57/64)			1134 (44-41/64)			-	
		Width mm(inch)	898 (35-3/8)			1095 (43-7/64)			-	
		Depth mm(inch)	898 (35-3/8)			529 (20-53/64)			-	
Weight		(NET) kg(lb)	20 (44)			94 (207)			-	
		(GROSS) kg(lb)	27 (60)			102 (224)			-	
		Panel (NET) kg(lb)	5 (11)			-			-	
Layers limit (actually)			11 (12)			2 (3)			-	
Operation condition		Cool (DBT)	18°C ~ 32°C			-10°C ~ 43°C			-	
		Heat (DBT)	16°C ~ 30°C			-15°C ~ 24°C			-	
MAX WORKING PRESSURE HP/LP MPa (bar)			4.15/2.55 (41.5/25.5)						-	
PIPING	Pipe diameter mm (inch)		(Liquid)Ø9.52(3/8) (Gas)Ø15.88(5/8)			(Liquid)Ø9.52(3/8) (Gas)Ø15.88(5/8)			-	
	Connecting method, Standard length m(ft)		flared type, 5.0(16.4)			flared type, 5.0(16.4)			-	
	Pipe length range m (ft)		5 ~ 50m (16.4 ~ 164.0)						-	
	Indoor unit & Outdoor unit height difference m (ft)		15m(OD located lower)/30m(OD located higher) (49.2/98.4)						-	
	Add gas amount g/m (oz/ft)		45g/m (0.484)						-	
	Pipe length for additional gas m (ft)		30m (98.4)						-	

*1 In case it is necessary to indicate the air flow volume in (l/s), the value in (m³/min.) shall be multiplied by 16.7 and rounded down the decimal point.
*2 If the EUROVENT Certified models can be operated under the "extra-low"temperature condition, -7°C dry bulb and -8°C wet-bulb temperatures with rated voltage 230V shall be used.
*3 Network Impedance shall be applicable for EUROPE and CHINA models.
*4 The annual consumption is calculated by multiplying the input power at 230V(400V) by an average of 500 hours per year in cooling mode.
*5 EER and COP classification is at 230V(400V) only in accordance with EU directive 2002/31/EC.
*6 $\eta_{s.c}$ and $\eta_{s.h}$ classification is at 230V(400V) only in accordance with EN-14825. For heating, $\eta_{s.h}$ indicates the value of only Average heating season.
*7 H: High at setting 5 stage (Level 5), M: Middle at setting 5 stage (Level 3), L: Low at setting 5 stage (Level 1)

Single-Type

1-1. Unit Specifications

PZ2

1. 4-Way Cassette Type S-100PU2E5B / U-100PZ2E8

INDOOR		MODEL	S-100PU2E5B			-			-	
PANEL		MODEL	Standard type: CZ-KPU3 / ECONAVI type: CZ-KPU3A			-			-	
OUTDOOR		MODEL	-			U-100PZ2E8			-	
Branch pipe		MODEL	-							
Performance test condition			ISO5151 / EN14511 / EN12102 / EN14825							
Power supply		Ø, Hz	1Ø 50Hz			3Ø 50Hz				
		V	220V	230V	240V	380V	400V	415V	Min	Max
COOLING	Capacity	kW	10.0	10.0	10.0	-	-	-	3.0	11.5
		BTU/h	34100	34100	34100	-	-	-	10200	39200
	Current	A	0.82	0.79	0.76	4.10	3.90	3.75	-	-
	Input power	W	100	100	100	2.520k	2.520k	2.520k	-	-
		TOTAL W	-			2.620k	2.620k	2.620k	560	4.000k
	Annual consumption	TOTAL kWh *4	-			-	1310	-	-	-
	EER/EER CLASS	TOTAL (W/W) *5/ ("A"~"G")	-	-	-	3.82	3.82/A	3.82	5.36	2.88
	Erp *6 Pdesign	kW	-	-	-	-	10.0	-	-	-
	Erp *6 SEER	(W/W)	-	-	-	-	6.7	-	-	-
	Erp *6 Annual consumption	kWh	-	-	-	-	521	-	-	-
	Erp *6 Class		-	-	-	-	A++	-	-	-
	Power factor	%	-	-	-	93	93	93	-	-
	Noise indoor	dB-A (H/M/L) *7	45/38/32			-			-	-
		Power Level dB	60/53/47			-			-	-
	Noise outdoor	dB-A (H/L)	-			52/-			-	-
		Power Level dB	-			70/-			-	-
HEATING	Capacity	kW	10.0	10.0	10.0	-	-	-	3.0	14.0
		BTU/h	34100	34100	34100	-	-	-	10200	47800
	Current	A	0.81	0.78	0.75	3.15	3.00	2.90	-	-
	Input power	W	95	95	95	1.935k	1.935k	1.935k	-	-
		TOTAL W	-			2.030k	2.030k	2.030k	560	3.900k
	COP/COP CLASS	TOTAL (W/W) *5/ ("A"~"G")	-	-	-	4.93	4.93/A	4.93	5.36	3.59
	Erp *6 Pdesign at -10°C	kW	-	-	-	-	10.0	-	-	-
	Erp *6 Tbivalent	°C	-	-	-	-	-10	-	-	-
	Erp *6 SCOP	(W/W)	-	-	-	-	4.4	-	-	-
	Erp *6 Annual consumption	kWh	-	-	-	-	3182	-	-	-
	Erp *6 elbu(-10°C)	kW	-	-	-	-	0.00	-	-	-
	Erp *6 Class		-	-	-	-	A+	-	-	-
	Power factor	%	-	-	-	93	93	93	-	-
	Noise indoor	dB-A (H/M/L) *7	45/38/32			-			-	-
		Power Level dB	60/53/47			-			-	-
	Noise outdoor	dB-A (H/L)	-			52/-			-	-
		Power Level dB	-			70/-			-	-
EXTRA LOW TEMP	Total capacity(kW) / Input power(W) / COP		-						-	
Max Current(A) / Max Input power(W)			0.82/100	0.79/100	0.76/100	9.00/5.55k	9.00/5.80k	9.00/6.05k	-	
Starting current(A) (Cooling/Heating)			-	-	-	4.10/3.15	3.90/3.00	3.75/2.90	-	
Comp output(W)						2.50k	2.50k	2.50k		
Network Impedance(ΩMAX.)			-			-			-	
Fan motor output (Indoor/Outdoor) W			90			120			-	
Moisture removal volume		L/h(Pt/h)	2.7		(5.7)	-			-	
External static pressure		Pa	-			-			-	
Indoor Air flow *7	Cooling	m³/min (ft³/min)	36.0/26.0/18.0 (1271)/(918)/(636)			-			-	-
	Heating	m³/min (ft³/min)	36.0/26.0/18.0 (1271)/(918)/(636)			-			-	-
Outdoor Air flow	Cooling	m³/min (ft³/min)	-			76.0 (2683)			-	-
	Heating	m³/min (ft³/min)	-			70.0 (2472)			-	-
Refrigerant type / amount g(oz)			-			R32	2.60k	(91.7)	-	
Product dimension		Height mm(inch)	319 (12-9/16)			996 (39- 7/32)			-	
		Width mm(inch)	840 (33-5/64)			980 (38-37/64)			-	
		Depth mm(inch)	840 (33-5/64)			370 (14- 9/16)			-	
Product dimension (Panel)		H×W×D mm, inch	33.5×950×950 (1-11/32×37-13/32×37-13/32)			-			-	
Packing dimension		Height mm(inch)	365 (14-3/8)			1134 (44-41/64)			-	
		Width mm(inch)	898 (35-3/8)			1095 (43-7/64)			-	
		Depth mm(inch)	898 (35-3/8)			529 (20-53/64)			-	
Weight		(NET) kg(lb)	25 (55)			90 (199)			-	
		(GROSS) kg(lb)	32 (71)			98 (216)			-	
		Panel (NET) kg(lb)	5 (11)			-			-	
Layers limit (actually)			11 (12)			2 (3)			-	
Operation condition		Cool (DBT)	18°C ~ 32°C			-10°C ~ 43°C			-	
		Heat (DBT)	16°C ~ 30°C			-15°C ~ 24°C			-	
MAX WORKING PRESSURE HP/LP MPa (bar)			4.15/2.55 (41.5/25.5)						-	
PIPING	Pipe diameter mm (inch)		(Liquid)Ø9.52(3/8) (Gas)Ø15.88(5/8)			(Liquid)Ø9.52(3/8) (Gas)Ø15.88(5/8)			-	
	Connecting method, Standard length m(ft)		flared type, 5.0(16.4)			flared type, 5.0(16.4)			-	
	Pipe length range m (ft)		5 ~ 50m (16.4 ~ 164.0)						-	
	Indoor unit & Outdoor unit height difference m (ft)		15m(OD located lower)/30m(OD located higher) (49.2/98.4)						-	
	Add gas amount g/m (oz/ft)		45g/m (0.484)						-	
	Pipe length for additional gas m (ft)		30m (98.4)						-	

*1 In case it is necessary to indicate the air flow volume in (l/s), the value in (m³/min.) shall be multiplied by 16.7 and rounded down the decimal point.
*2 If the EUROVENT Certified models can be operated under the "extra-low"temperature condition, -7°C dry bulb and -8°C wet-bulb temperatures with rated voltage 230V shall be used.
*3 Network Impedance shall be applicable for EUROPE and CHINA models.
*4 The annual consumption is calculated by multiplying the input power at 230V(400V) by an average of 500 hours per year in cooling mode.
*5 EER and COP classification is at 230V(400V) only in accordance with EU directive 2002/31/EC.
*6 SEER and SCOP classification is at 230V(400V) only in accordance with EN-14825. For heating, SCOP indicates the value of only Average heating season, Other fiche data indicates in an attached sheet
*7 H: High at setting 5 stage (Level 5), M: Middle at setting 5 stage (Level 3), L: Low at setting 5 stage (Level 1)

Single-Type

1-1. Unit Specifications

PZ2

1. 4-Way Cassette Type S-125PU2E5B / U-125PZ2E8

INDOOR		MODEL	S-125PU2E5B			-			-	
PANEL		MODEL	Standard type: CZ-KPU3 / ECONAVI type: CZ-KPU3A			-			-	
OUTDOOR		MODEL	-			U-125PZ2E8			-	
Branch pipe		MODEL	-							
Performance test condition			ISO5151 / EN14511 / EN12102 / EN14825							
Power supply		Ø, Hz	1Ø 50Hz			3Ø 50Hz				
		V	220V	230V	240V	380V	400V	415V	Min	Max
COOLING	Capacity	kW	12.5	12.5	12.5	-	-	-	3.2	13.5
		BTU/h	42700	42700	42700	-	-	-	10900	46100
	Current	A	0.91	0.88	0.85	5.45	5.20	5.00	-	-
	Input power	W	110	110	110	3.380k	3.380k	3.380k	-	-
		TOTAL W	-			3.490k	3.490k	3.490k	600	4.800k
	Annual consumption	TOTAL kWh *4	-			-	1745	-	-	-
	EER/EER CLASS	TOTAL (W/W) *5/ ("A"~"G")	-	-	-	3.58	3.58/A	3.58	5.33	2.81
	Erp *6 Pdesign	kW	-	-	-	-	12.5	-	-	-
	Erp *6 $\eta_{s.c}$	%	-	-	-	-	266.1	-	-	-
	Erp *6 Annual consumption	kWh	-	-	-	-	-	-	-	-
	Erp *6 Class		-	-	-	-	-	-	-	-
	Power factor	%	-	-	-	94	94	94	-	-
	Noise indoor	dB-A (H/M/L) *7	46/39/33			-			-	-
		Power Level dB	61/54/48			-			-	-
	Noise outdoor	dB-A (H/L)	-			55/-			-	-
		Power Level dB	-			73/-			-	-
HEATING	Capacity	kW	12.5	12.5	12.5	-	-	-	3.3	15.0
		BTU/h	42700	42700	42700	-	-	-	11300	51200
	Current	A	0.90	0.87	0.84	4.40	4.15	4.00	-	-
	Input power	W	105	105	105	2.715k	2.715k	2.715k	-	-
		TOTAL W	-			2.820k	2.820k	2.820k	600	4.200k
	COP/COP CLASS	TOTAL (W/W) *5/ ("A"~"G")	-	-	-	4.43	4.43/A	4.43	5.50	3.57
	Erp *6 Pdesign at -10°C	kW	-	-	-	-	12.5	-	-	-
	Erp *6 Tbivalent	°C	-	-	-	-	-10	-	-	-
	Erp *6 $\eta_{s.h}$	%	-	-	-	-	157.3	-	-	-
	Erp *6 Annual consumption	kWh	-	-	-	-	-	-	-	-
	Erp *6 elbu(-10°C)	kW	-	-	-	-	0.00	-	-	-
	Erp *6 Class		-	-	-	-	-	-	-	-
	Power factor	%	-	-	-	94	94	94	-	-
	Noise indoor	dB-A (H/M/L) *7	46/39/33			-			-	-
		Power Level dB	61/54/48						-	-
	Noise outdoor	dB-A (H/L)	-			55/-			-	-
		Power Level dB	-			73/-			-	-
EXTRA LOW TEMP	Total capacity(kW) / Input power(W) / COP		-						-	
Max Current(A) / Max Input power(W)			0.91/110	0.88/110	0.85/110	10.0/6.20k	10.0/6.50k	10.0/6.75k	-	
Starting current(A) (Cooling/Heating)			-	-	-	5.45/4.40	5.20/4.15	5.00/4.00	-	
Comp output(W)			-			2.80k	2.80k	2.80k		
Network Impedance(ΩMAX.)			-			-			-	
Fan motor output (Indoor/Outdoor) W			90			120			-	
Moisture removal volume		L/h(Pt/h)	4.8		(10.1)	-			-	
External static pressure		Pa	-			-			-	
Indoor Air flow *7	Cooling	m³/min (ft³/min)	37.0/27.0/19.0 (1307)/(953)/(671)			-			-	-
	Heating	m³/min (ft³/min)	37.0/27.0/19.0 (1307)/(953)/(671)			-			-	-
Outdoor Air flow	Cooling	m³/min (ft³/min)	-			86.0 (3037)			-	-
	Heating	m³/min (ft³/min)	-			78.0 (2754)			-	-
Refrigerant type / amount g(oz)			-			R32	2.98k	(105.1)	-	
Product dimension		Height mm(inch)	319 (12-9/16)			996 (39- 7/32)			-	
		Width mm(inch)	840 (33-5/64)			980 (38-37/64)			-	
		Depth mm(inch)	840 (33-5/64)			370 (14- 9/16)			-	
Product dimension (Panel)		H×W×D mm, inch	33.5×950×950 (1-11/32×37-13/32×37-13/32)			-			-	
Packing dimension		Height mm(inch)	365 (14-3/8)			1134 (44-41/64)			-	
		Width mm(inch)	898 (35-3/8)			1095 (43-7/64)			-	
		Depth mm(inch)	898 (35-3/8)			529 (20-53/64)			-	
Weight		(NET) kg(lb)	25 (55)			94 (207)			-	
		(GROSS) kg(lb)	32 (71)			102 (224)			-	
		Panel (NET) kg(lb)	5 (11)			-			-	
Layers limit (actually)			11 (12)			2 (3)			-	
Operation condition		Cool (DBT)	18°C ~ 32°C			-10°C ~ 43°C			-	
		Heat (DBT)	16°C ~ 30°C			-15°C ~ 24°C			-	
MAX WORKING PRESSURE HP/LP MPa (bar)			4.15/2.55 (41.5/25.5)						-	
PIPING	Pipe diameter mm (inch)		(Liquid)Ø9.52(3/8) (Gas)Ø15.88(5/8)			(Liquid)Ø9.52(3/8) (Gas)Ø15.88(5/8)			-	
	Connecting method, Standard length m(ft)		flared type, 5.0(16.4)			flared type, 5.0(16.4)			-	
	Pipe length range m (ft)		5 ~ 50m (16.4 ~ 164.0)						-	
	Indoor unit & Outdoor unit height difference m (ft)		15m(OD located lower)/30m(OD located higher) (49.2/98.4)						-	
	Add gas amount g/m (oz/ft)		45g/m (0.484)						-	
	Pipe length for additional gas m (ft)		30m (98.4)						-	

*1 In case it is necessary to indicate the air flow volume in (l/s), the value in (m³/min.) shall be multiplied by 16.7 and rounded down the decimal point.
*2 If the EUROVENT Certified models can be operated under the "extra-low"temperature condition, -7°C dry bulb and -8°C wet-bulb temperatures with rated voltage 230V shall be used.
*3 Network Impedance shall be applicable for EUROPE and CHINA models.
*4 The annual consumption is calculated by multiplying the input power at 230V(400V) by an average of 500 hours per year in cooling mode.
*5 EER and COP classification is at 230V(400V) only in accordance with EU directive 2002/31/EC.
*6 $\eta_{s.c}$ and $\eta_{s.h}$ classification is at 230V(400V) only in accordance with EN-14825. For heating, $\eta_{s.h}$ indicates the value of only Average heating season.
*7 H: High at setting 5 stage (Level 5), M: Middle at setting 5 stage (Level 3), L: Low at setting 5 stage (Level 1)

Single-Type

1-1. Unit Specifications

PZ2

1. 4-Way Cassette Type S-140PU2E5B / U-140PZ2E8

INDOOR		MODEL	S-140PU2E5B			-			-	
PANEL		MODEL	Standard type: CZ-KPU3 / ECONAVI type: CZ-KPU3A			-			-	
OUTDOOR		MODEL	-			U-140PZ2E8			-	
Branch pipe		MODEL	-							
Performance test condition			ISO5151 / EN14511 / EN12102 / EN14825							
Power supply		Ø, Hz	1Ø 50Hz			3Ø 50Hz				
		V	220V	230V	240V	380V	400V	415V	Min	Max
COOLING	Capacity	kW	14.0	14.0	14.0	-	-	-	3.3	15.0
		BTU/h	47800	47800	47800	-	-	-	11300	51200
	Current	A	0.97	0.94	0.91	6.85	6.50	6.25	-	-
	Input power	W	120	120	120	4.220k	4.220k	4.220k	-	-
		TOTAL W	-			4.340k	4.340k	4.340k	620	5.500k
	Annual consumption	TOTAL kWh *4	-			-	2170	-	-	-
	EER/EER CLASS	TOTAL (W/W) *5/ ("A"~"G")	-	-	-	3.23	3.23/A	3.23	5.32	2.73
	Erp *6 Pdesign	kW	-	-	-	-	14.0	-	-	-
	Erp *6 $\eta_{s,c}$	%	-	-	-	-	256.5	-	-	-
	Erp *6 Annual consumption	kWh	-	-	-	-	-	-	-	-
	Erp *6 Class		-	-	-	-	-	-	-	-
	Power factor	%	-	-	-	94	94	94	-	-
	Noise indoor	dB-A (H/M/L) *7	47/40/34			-			-	-
		Power Level dB	62/55/49			-			-	-
	Noise outdoor	dB-A (H/L)	-			56/-			-	-
		Power Level dB	-			74/-			-	-
HEATING	Capacity	kW	14.0	14.0	14.0	-	-	-	3.4	16.0
		BTU/h	47800	47800	47800	-	-	-	11600	54600
	Current	A	0.96	0.93	0.90	5.25	4.95	4.80	-	-
	Input power	W	115	115	115	3.235k	3.235k	3.235k	-	-
		TOTAL W	-			3.350k	3.350k	3.350k	620	4.800k
	COP/COP CLASS	TOTAL (W/W) *5/ ("A"~"G")	-	-	-	4.18	4.18/A	4.18	5.48	3.33
	Erp *6 Pdesign at -10°C	kW	-	-	-	-	14.0	-	-	-
	Erp *6 Tbivalent	°C	-	-	-	-	-7	-	-	-
	Erp *6 $\eta_{s,h}$	%	-	-	-	-	152.4	-	-	-
	Erp *6 Annual consumption	kWh	-	-	-	-	-	-	-	-
	Erp *6 elbu(-10°C)	kW	-	-	-	-	3.10	-	-	-
	Erp *6 Class		-	-	-	-	-	-	-	-
	Power factor	%	-	-	-	94	94	94	-	-
	Noise indoor	dB-A (H/M/L) *7	47/40/34			-			-	-
		Power Level dB	62/55/49						-	-
	Noise outdoor	dB-A (H/L)	-			56/-			-	-
		Power Level dB	-			74/-			-	-
EXTRA LOW TEMP	Total capacity(kW) / Input power(W) / COP		-						-	
Max Current(A) / Max Input power(W)			0.97/120	0.94/120	0.91/120	10.5/6.50k	10.5/6.85k	10.5/7.10k	-	
Starting current(A) (Cooling/Heating)			-	-	-	6.85/5.25	6.50/4.95	6.25/4.80	-	
Comp output(W)			-			3.00k	3.00k	3.00k		
Network Impedance(ΩMAX.)			-			-			-	
Fan motor output (Indoor/Outdoor) W			60			120			-	
Moisture removal volume		L/h(Pt/h)	6.0		(12.6)	-			-	
External static pressure		Pa	-			-			-	
Indoor Air flow *7	Cooling	m³/min (ft³/min)	38.0/29.0/20.0 (1342)/(1024)/(706)			-			-	-
	Heating	m³/min (ft³/min)	38.0/29.0/20.0 (1342)/(1024)/(706)			-			-	-
Outdoor Air flow	Cooling	m³/min (ft³/min)	-			89.0 (3143)			-	-
	Heating	m³/min (ft³/min)	-			83.0 (2931)			-	-
Refrigerant type / amount g(oz)			-			R32 2.98k (105.1)			-	
Product dimension		Height mm(inch)	319 (12-9/16)			996 (39- 7/32)			-	
		Width mm(inch)	840 (33-5/64)			980 (38-37/64)			-	
		Depth mm(inch)	840 (33-5/64)			370 (14- 9/16)			-	
Product dimension (Panel)		H×W×D mm, inch	33.5×950×950 (1-11/32×37-13/32×37-13/32)			-			-	
Packing dimension		Height mm(inch)	365 (14-3/8)			1134 (44-41/64)			-	
		Width mm(inch)	898 (35-3/8)			1095 (43-7/64)			-	
		Depth mm(inch)	898 (35-3/8)			529 (20-53/64)			-	
Weight		(NET) kg(lb)	25 (55)			94 (207)			-	
		(GROSS) kg(lb)	32 (71)			102 (224)			-	
		Panel (NET) kg(lb)	5 (11)			-			-	
Layers limit (actually)			11 (12)			2 (3)			-	
Operation condition		Cool (DBT)	18°C ~ 32°C			-10°C ~ 43°C			-	
		Heat (DBT)	16°C ~ 30°C			-15°C ~ 24°C			-	
MAX WORKING PRESSURE HP/LP MPa (bar)			4.15/2.55 (41.5/25.5)						-	
PIPING	Pipe diameter mm (inch)		(Liquid)Ø9.52(3/8) (Gas)Ø15.88(5/8)			(Liquid)Ø9.52(3/8) (Gas)Ø15.88(5/8)			-	
	Connecting method, Standard length m(ft)		flared type, 5.0(16.4)			flared type, 5.0(16.4)			-	
	Pipe length range m (ft)		5 ~ 50m (16.4 ~ 164.0)						-	
	Indoor unit & Outdoor unit height difference m (ft)		15m(OD located lower)/30m(OD located higher) (49.2/98.4)						-	
	Add gas amount g/m (oz/ft)		45g/m (0.484)						-	
	Pipe length for additional gas m (ft)		30m (98.4)						-	

*1 In case it is necessary to indicate the air flow volume in (l/s), the value in (m³/min.) shall be multiplied by 16.7 and rounded down the decimal point.
*2 If the EUROVENT Certified models can be operated under the "extra-low"temperature condition, -7°C dry bulb and -8°C wet-bulb temperatures with rated voltage 230V shall be used.
*3 Network Impedance shall be applicable for EUROPE and CHINA models.
*4 The annual consumption is calculated by multiplying the input power at 230V(400V) by an average of 500 hours per year in cooling mode.
*5 EER and COP classification is at 230V(400V) only in accordance with EU directive 2002/31/EC.
*6 $\eta_{s,c}$ and $\eta_{s,h}$ classification is at 230V(400V) only in accordance with EN-14825. For heating, $\eta_{s,h}$ indicates the value of only Average heating season.
*7 H: High at setting 5 stage (Level 5), M: Middle at setting 5 stage (Level 3), L: Low at setting 5 stage (Level 1)

Simultaneous (Twin) -Type

1-1. Unit Specifications

PZ2

2. Ceiling Type S-50PT2E5B×2 / U-100PZ2E5

INDOOR		MODEL	S-50PT2E5B×2			-			-	
PANEL		MODEL	-			-			-	
OUTDOOR		MODEL	-			U-100PZ2E5			-	
Branch pipe		MODEL	-							
Performance test condition			ISO5151 / EN14511 / EN12102 / EN14825							
Power supply		Ø, Hz	1Ø 50Hz			1Ø 50Hz				
		V	220V	230V	240V	220V	230V	240V	Min	Max
COOLING	Capacity	kW	10.0	10.0	10.0	-	-	-	3.0	11.5
		BTU/h	34100	34100	34100	-	-	-	10200	39200
	Current	A	0.39×2	0.38×2	0.37×2	12.8	12.2	11.7	-	-
	Input power	W	40×2	40×2	40×2	2.670k	2.670k	2.670k	-	-
		TOTAL W	-			2.750k	2.750k	2.750k	560	4.100k
	Annual consumption	TOTAL kWh *4	-			-	1375	-	-	-
	EER/EER CLASS	TOTAL (W/W) *5/ ("A"~"G")	-	-	-	3.64	3.64/A	3.64	5.36	2.80
	Erp *6 Pdesign	kW	-	-	-	-	10.0	-	-	-
	Erp *6 SEER	(W/W)	-	-	-	-	6.3	-	-	-
	Erp *6 Annual consumption	kWh	-	-	-	-	551	-	-	-
	Erp *6 Class		-	-	-	-	A++	-	-	-
	Power factor	%	-	-	-	95	95	95	-	-
	Noise indoor	dB-A (H/M/L)	37×2/33×2/29×2			-			-	-
		Power Level dB	55×2/51×2/47×2			-			-	-
	Noise outdoor	dB-A (H/L)	-			52/-			-	-
		Power Level dB	-			70/-			-	-
HEATING	Capacity	kW	10.0	10.0	10.0	-	-	-	3.0	14.0
		BTU/h	34100	34100	34100	-	-	-	10200	47800
	Current	A	0.39×2	0.38×2	0.37×2	10.9	10.4	10.0	-	
	Input power	W	40×2	40×2	40×2	2.280k	2.280k	2.280k	-	
		TOTAL W	-			2.360k	2.360k	2.360k	560	4.000k
	COP/COP CLASS	TOTAL (W/W) *5/ ("A"~"G")	-	-	-	4.24	4.24/A	4.24	5.36	3.50
	Erp *6 Pdesign at -10°C	kW	-	-	-	-	10.0	-	-	-
	Erp *6 Tbivalent	°C	-	-	-	-	-7	-	-	-
	Erp *6 SCOP	(W/W)	-	-	-	-	4	-	-	-
	Erp *6 Annual consumption	kWh	-	-	-	-	3495	-	-	-
	Erp *6 elbu(-10°C)	kW	-	-	-	-	2.07	-	-	-
	Erp *6 Class		-	-	-	-	A+	-	-	-
	Power factor	%	-	-	-	95	95	95	-	-
	Noise indoor	dB-A (H/M/L)	37×2/33×2/29×2			-			-	-
		Power Level dB	55×2/51×2/47×2			-			-	-
	Noise outdoor	dB-A (H/L)	-			52/-			-	-
		Power Level dB	-			70/-			-	-
EXTRA LOW TEMP	Total capacity(kW) / Input power(W) / COP		-						-	
Max Current(A) / Max Input power(W)			0.39×2/80×2	0.38×2/80×2	0.37×2/80×2	25.0/5.25k	25.0/5.50k	25.0/5.70k	-	
Starting current(A) (Cooling/Heating)			-	-	-	12.8/10.9	12.2/10.4	11.7/10.0	-	
Comp output(W)						2.50k	2.50k	2.50k		
Network Impedance(ΩMAX.)			-			-			-	
Fan motor output (Indoor/Outdoor) W			43			120			-	
Moisture removal volume		L/h(Pt/h)	5.6	(2.8×2)	(11.8)	-			-	
External static pressure		Pa	-			-			-	
Indoor Air flow	Cooling	m³/min (ft³/min)	15.0×2/12.5×2/10.5×2 (530×2)/(441×2)/(371×2)			-			-	-
Indoor Air flow	Heating	m³/min (ft³/min)	15.0×2/12.5×2/10.5×2 (530×2)/(441×2)/(371×2)			-			-	-
Outdoor Air flow	Cooling	m³/min (ft³/min)	-			76.0 (2683)			-	-
Outdoor Air flow	Heating	m³/min (ft³/min)	-			70.0 (2472)			-	-
Refrigerant type / amount g(oz)			-			R32	2.60k	(91.7)	-	
Product dimension		Height mm(inch)	235 (9-1/4)			996 (39- 7/32)			-	
		Width mm(inch)	960 (37-25/32)			980 (38-37/64)			-	
		Depth mm(inch)	690 (27-5/32)			370 (14- 9/16)			-	
Product dimension (Panel)		H×W×D mm, inch	-			-			-	
Packing dimension		Height mm(inch)	360 (14-11/64)			1134 (44-41/64)			-	
		Width mm(inch)	1025 (40-23/64)			1095 (43-7/64)			-	
		Depth mm(inch)	820 (32-9/32)			529 (20-53/64)			-	
Weight		(NET) kg(lb)	27 (60)			90 (199)			-	
		(GROSS) kg(lb)	34 (75)			98 (216)			-	
		Panel (NET) kg(lb)	-			-			-	
Layers limit (actually)			9 (10)			2 (3)			-	
Operation condition		Cool (DBT)	18°C ~ 32°C			-10°C ~ 43°C			-	
		Heat (DBT)	16°C ~ 30°C			-15°C ~ 24°C			-	
MAX WORKING PRESSURE HP/LP MPa (bar)			4.15/2.55 (41.5/25.5)						-	
PIPING	Pipe diameter mm (inch)		(Liquid)Ø6.35(1/4) (Gas)Ø12.7(1/2)			(Liquid)Ø9.52(3/8) (Gas)Ø15.88(5/8)			-	
	Connecting method, Standard length m(ft)		flared type, 5.0(16.4)			flared type, 5.0(16.4)			-	
	Pipe length range m (ft)		5 ~ 50m (16.4 ~ 164.0)						-	
	Indoor unit & Outdoor unit height difference m (ft)		15m(OD located lower)/30m(OD located higher) (49.2/98.4)						-	
	Add gas amount g/m (oz/ft)		45g/m (0.484)						-	
	Pipe length for additional gas m (ft)		30m (98.4)						-	

*1 In case it is necessary to indicate the air flow volume in (l/s), the value in (m³/min.) shall be multiplied by 16.7 and rounded down the decimal point.
*2 If the EUROVENT Certified models can be operated under the "extra-low"temperature condition, -7°C dry bulb and -8°C wet-bulb temperatures with rated voltage 230V shall be used.
*3 Network Impedance shall be applicable for EUROPE and CHINA models.
*4 The annual consumption is calculated by multiplying the input power at 230V(400V) by an average of 500 hours per year in cooling mode.
*5 EER and COP classification is at 230V(400V) only in accordance with EU directive 2002/31/EC.
*6 SEER and SCOP classification is at 230V(400V) only in accordance with EN-14825. For heating, SCOP indicates the value of only Average heating season, Other fiche data indicates in an attached sheet

Simultaneous (Twin) -Type

1-1. Unit Specifications

PZ2

2. Ceiling Type S-60PT2E5B×2 / U-125PZ2E5

INDOOR		MODEL	S-60PT2E5B×2			-			-	
PANEL		MODEL	-			-			-	
OUTDOOR		MODEL	-			U-125PZ2E5			-	
Branch pipe		MODEL	-							
Performance test condition			ISO5151 / EN14511 / EN12102 / EN14825							
Power supply		Ø, Hz	1Ø 50Hz			1Ø 50Hz				
		V	220V	230V	240V	220V	230V	240V	Min	Max
COOLING	Capacity	kW	12.5	12.5	12.5	-	-	-	3.2	13.5
		BTU/h	42700	42700	42700	-	-	-	10900	46100
	Current	A	0.42×2	0.41×2	0.40×2	17.7	16.9	16.2	-	-
	Input power	W	50×2	50×2	50×2	3.660k	3.660k	3.660k	-	-
		TOTAL W	-			3.760k	3.760k	3.760k	600	4.880k
	Annual consumption	TOTAL kWh *4	-			-	1880	-	-	-
	EER/EER CLASS	TOTAL (W/W) *5/ ("A"~"G")	-	-	-	3.32	3.32/A	3.32	5.33	2.77
	Erp *6 Pdesign	kW	-	-	-	-	12.5	-	-	-
	Erp *6 $\eta_{s,c}$	%	-	-	-	-	241.4	-	-	-
	Erp *6 Annual consumption	kWh	-	-	-	-	-	-	-	-
	Erp *6 Class		-	-	-	-	-	-	-	-
	Power factor	%	-	-	-	94	94	94	-	-
	Noise indoor	dB-A (H/M/L)	38×2/34×2/30×2			-			-	-
		Power Level dB	56×2/52×2/48×2			-			-	-
	Noise outdoor	dB-A (H/L)	-			55/-			-	-
		Power Level dB	-			73/-			-	-
HEATING	Capacity	kW	12.5	12.5	12.5	-	-	-	3.3	15.0
		BTU/h	42700	42700	42700	-	-	-	11300	51200
	Current	A	0.42×2	0.41×2	0.40×2	15.0	14.4	13.8	-	-
	Input power	W	50×2	50×2	50×2	3.110k	3.110k	3.110k	-	-
		TOTAL W	-			3.210k	3.210k	3.210k	730	4.400k
	COP/COP CLASS	TOTAL (W/W) *5/ ("A"~"G")	-	-	-	3.89	3.89/A	3.89	4.52	3.41
	Erp *6 Pdesign at -10°C	kW	-	-	-	-	12.5	-	-	-
	Erp *6 Tbivalent	°C	-	-	-	-	-7	-	-	-
	Erp *6 $\eta_{s,h}$	%	-	-	-	-	147.6	-	-	-
	Erp *6 Annual consumption	kWh	-	-	-	-	-	-	-	-
	Erp *6 elbu(-10°C)	kW	-	-	-	-	2.90	-	-	-
	Erp *6 Class		-	-	-	-	-	-	-	-
	Power factor	%	-	-	-	94	94	94	-	-
	Noise indoor	dB-A (H/M/L)	38×2/34×2/30×2			-			-	-
		Power Level dB	56v2/52v2/48×2						-	-
	Noise outdoor	dB-A (H/L)	-			55/-			-	-
		Power Level dB	-			73/-			-	-
EXTRA LOW TEMP	Total capacity(kW) / Input power(W) / COP		-						-	
Max Current(A) / Max Input power(W)			0.42×2/50×2	0.41×2/50×2	0.40×2/50×2	29.0/6.00k	29.0/6.30k	29.0/6.60k	-	
Starting current(A) (Cooling/Heating)			-	-	-	17.7/15.0	16.9/14.4	16.2/13.8	-	
Comp output(W)			-			2.80k	2.80k	2.80k		
Network Impedance(ΩMAX.)			-			-			-	
Fan motor output (Indoor/Outdoor) W			74			120			-	
Moisture removal volume		L/h(Pt/h)	6.8	(3.4×2)	(14.3)	-			-	
External static pressure		Pa	-			-			-	
Indoor Air flow	Cooling	m³/min (ft³/min)	20.0×2/17.0×2/14.5×2 (706×2)/(600×2)/(512×2)			-			-	-
Indoor Air flow	Heating	m³/min (ft³/min)	20.0×2/17.0×2/14.5×2 (706×2)/(600×2)/(512×2)			-			-	-
Outdoor Air flow	Cooling	m³/min (ft³/min)	-			86.0 (3037)			-	-
Outdoor Air flow	Heating	m³/min (ft³/min)	-			78.0 (2754)			-	-
Refrigerant type / amount g(oz)			-			R32	2.98k	(105.1)	-	
Product dimension		Height mm(inch)	235 (9-1/4)			996 (39- 7/32)			-	
		Width mm(inch)	1275 (50-3/16)			980 (38-37/64)			-	
		Depth mm(inch)	690 (27-5/32)			370 (14- 9/16)			-	
Product dimension (Panel)		H×W×D mm, inch	-			-			-	
Packing dimension		Height mm(inch)	360 (14-11/64)			1134 (44-41/64)			-	
		Width mm(inch)	1340 (52-3/4)			1095 (43-7/64)			-	
		Depth mm(inch)	820 (32-9/32)			529 (20-53/64)			-	
Weight		(NET) kg(lb)	33 (73)			94 (207)			-	
		(GROSS) kg(lb)	42 (93)			102 (224)			-	
		Panel (NET) kg(lb)	-			-			-	
Layers limit (actually)			9 (10)			2 (3)			-	
Operation condition		Cool (DBT)	18°C ~ 32°C			-10°C ~ 43°C			-	
		Heat (DBT)	16°C ~ 30°C			-15°C ~ 24°C			-	
MAX WORKING PRESSURE HP/LP MPa (bar)			4.15/2.55 (41.5/25.5)							
PIPING	Pipe diameter mm (inch)		(Liquid)Ø9.52(3/8) (Gas)Ø15.88(5/8)			(Liquid)Ø9.52(3/8) (Gas)Ø15.88(5/8)			-	
	Connecting method, Standard length m(ft)		flared type, 5.0(16.4)			flared type, 5.0(16.4)			-	
	Pipe length range m (ft)		5 ~ 50m (16.4 ~ 164.0)						-	
	Indoor unit & Outdoor unit height difference m (ft)		15m(OD located lower)/30m(OD located higher) (49.2/98.4)						-	
	Add gas amount g/m (oz/ft)		45g/m (0.484)						-	
	Pipe length for additional gas m (ft)		30m (98.4)						-	

*1 In case it is necessary to indicate the air flow volume in (l/s), the value in (m³/min.) shall be multiplied by 16.7 and rounded down the decimal point.
*2 If the EUROVENT Certified models can be operated under the "extra-low"temperature condition, -7°C dry bulb and -8°C wet-bulb temperatures with rated voltage 230V shall be used.
*3 Network Impedance shall be applicable for EUROPE and CHINA models.
*4 The annual consumption is calculated by multiplying the input power at 230V(400V) by an average of 500 hours per year in cooling mode.
*5 EER and COP classification is at 230V(400V) only in accordance with EU directive 2002/31/EC.
*6 $\eta_{s,c}$ and $\eta_{s,h}$ classification is at 230V(400V) only in accordance with EN-14825. For heating, $\eta_{s,h}$ indicates the value of only Average heating season.

Simultaneous (Twin) -Type

1-1. Unit Specifications

PZ2

2. Ceiling Type S-71PT2E5B×2 / U-140PZ2E5

INDOOR		MODEL	S-71PT2E5B×2			-			-	
PANEL		MODEL	-			-			-	
OUTDOOR		MODEL	-			U-140PZ2E5			-	
Branch pipe		MODEL	-							
Performance test condition			ISO5151 / EN14511 / EN12102 / EN14825							
Power supply		Ø, Hz	1Ø 50Hz			1Ø 50Hz				
		V	220V	230V	240V	220V	230V	240V	Min	Max
COOLING	Capacity	kW	14.0	14.0	14.0	-	-	-	3.3	15.0
		BTU/h	47800	47800	47800	-	-	-	11300	51200
	Current	A	0.45×2	0.44×2	0.43×2	22.1	21.2	20.3	-	-
	Input power	W	55×2	55×2	552	4.590k	4.590k	4.590k	-	-
		TOTAL W	-			4.700k	4.700k	4.700k	620	5.500k
	Annual consumption	TOTAL kWh *4	-			-	2350	-	-	-
	EER/EER CLASS	TOTAL (W/W) *5/ ("A"~"G")	-	-	-	2.98	2.98/C	2.98	5.32	2.73
	Erp *6 Pdesign	kW	-	-	-	-	14.0	-	-	-
	Erp *6 $\eta_{s,c}$	%	-	-	-	-	227.5	-	-	-
	Erp *6 Annual consumption	kWh	-	-	-	-	-	-	-	-
	Erp *6 Class		-	-	-	-	-	-	-	-
	Power factor	%	-	-	-	94	94	94	-	-
	Noise indoor	dB-A (H/M/L)	39×2/35×2/31×2			-			-	-
		Power Level dB	57×2/53×2/49×2			-			-	-
	Noise outdoor	dB-A (H/L)	-			56/-			-	-
		Power Level dB	-			74/-			-	-
HEATING	Capacity	kW	14.0	14.0	14.0	-	-	-	3.4	16.0
		BTU/h	47800	47800	47800	-	-	-	11600	54600
	Current	A	0.45×2	0.44×2	0.43×2	17.8	17.0	16.3	-	-
	Input power	W	55×2	55×2	55×2	3.670k	3.670k	3.670k	-	-
		TOTAL W	-			3.780k	3.780k	3.780k	620	5.200k
	COP/COP CLASS	TOTAL (W/W) *5/ ("A"~"G")	-	-	-	3.70	3.70/A	3.70	5.48	3.08
	Erp *6 Pdesign at -10°C	kW	-	-	-	-	13.6	-	-	-
	Erp *6 Tbivalent	°C	-	-	-	-	-7	-	-	-
	Erp *6 $\eta_{s,h}$	%	-	-	-	-	145.4	-	-	-
	Erp *6 Annual consumption	kWh	-	-	-	-	-	-	-	-
	Erp *6 elbu(-10°C)	kW	-	-	-	-	3.20	-	-	-
	Erp *6 Class		-	-	-	-	-	-	-	-
	Power factor	%	-	-	-	94	94	94	-	-
	Noise indoor	dB-A (H/M/L)	39×2/35×2/31×2			-			-	-
		Power Level dB	57×2/53×2/49×2						-	-
	Noise outdoor	dB-A (H/L)	-			56/-			-	-
		Power Level dB	-			74/-			-	-
EXTRA LOW TEMP	Total capacity(kW) / Input power(W) / COP		-						-	
Max Current(A) / Max Input power(W)			0.45×2/55×2	0.44×2/55×2	0.43×2/55×2	30.0/6.25k	30.0/6.50k	30.0/6.80k	-	
Starting current(A) (Cooling/Heating)			-	-	-	22.1/17.8	21.2/17.0	20.3/16.3	-	
Comp output(W)			-			3.00k	3.00k	3.00k		
Network Impedance(ΩMAX.)			-			-			-	
Fan motor output (Indoor/Outdoor) W			74			120			-	
Moisture removal volume		L/h(Pt/h)	8.4	(4.2×2)	(17.6)	-			-	
External static pressure		Pa	-			-			-	
Indoor Air flow	Cooling	m³/min (ft³/min)	21.0×2/18.0×2/15.5×2 (742×2)/(636×2)/(547×2)			-			-	-
	Heating	m³/min (ft³/min)	21.0×2/18.0×2/15.5×2 (742×2)/(636×2)/(547×2)			-			-	-
Outdoor Air flow	Cooling	m³/min (ft³/min)	-			89.0 (3143)			-	-
	Heating	m³/min (ft³/min)	-			83.0 (2931)			-	-
Refrigerant type / amount g(oz)			-			R32	2.98k	(105.1)	-	
Product dimension		Height mm(inch)	235 (9-1/4)			996 (39- 7/32)			-	
		Width mm(inch)	1275 (50-3/16)			980 (38-37/64)			-	
		Depth mm(inch)	690 (27-5/32)			370 (14- 9/16)			-	
Product dimension (Panel)		H×W×D mm, inch	-			-			-	
Packing dimension		Height mm(inch)	360 (14-11/64)			1134 (44-41/64)			-	
		Width mm(inch)	1340 (52-3/4)			1095 (43-7/64)			-	
		Depth mm(inch)	820 (32-9/32)			529 (20-53/64)			-	
Weight		(NET) kg(lb)	33 (73)			94 (207)			-	
		(GROSS) kg(lb)	42 (93)			102 (224)			-	
		Panel (NET) kg(lb)	-			-			-	
Layers limit (actually)			9 (10)			2 (3)			-	
Operation condition		Cool (DBT)	18°C ~ 32°C			-10°C ~ 43°C			-	
		Heat (DBT)	16°C ~ 30°C			-15°C ~ 24°C			-	
MAX WORKING PRESSURE HP/LP MPa (bar)			4.15/2.55 (41.5/25.5)							
PIPING	Pipe diameter mm (inch)		(Liquid)Ø9.52(3/8) (Gas)Ø15.88(5/8)			(Liquid)Ø9.52(3/8) (Gas)Ø15.88(5/8)			-	
	Connecting method, Standard length m(ft)		flared type, 5.0(16.4)			flared type, 5.0(16.4)			-	
	Pipe length range m (ft)		5 ~ 50m (16.4 ~ 164.0)						-	
	Indoor unit & Outdoor unit height difference m (ft)		15m(OD located lower)/30m(OD located higher) (49.2/98.4)						-	
	Add gas amount g/m (oz/ft)		45g/m (0.484)						-	
	Pipe length for additional gas m (ft)		30m (98.4)						-	

*1 In case it is necessary to indicate the air flow volume in (l/s), the value in (m³/min.) shall be multiplied by 16.7 and rounded down the decimal point.
*2 If the EUROVENT Certified models can be operated under the "extra-low"temperature condition, -7°C dry bulb and -8°C wet-bulb temperatures with rated voltage 230V shall be used.
*3 Network Impedance shall be applicable for EUROPE and CHINA models.
*4 The annual consumption is calculated by multiplying the input power at 230V(400V) by an average of 500 hours per year in cooling mode.
*5 EER and COP classification is at 230V(400V) only in accordance with EU directive 2002/31/EC.
*6 $\eta_{s,c}$ and $\eta_{s,h}$ classification is at 230V(400V) only in accordance with EN-14825. For heating, $\eta_{s,h}$ indicates the value of only Average heating season.

Single -Type

1-1. Unit Specifications

PZ2

2. Ceiling Type S-100PT2E5B / U-100PZ2E5

INDOOR		MODEL	S-100PT2E5B			-			-	
PANEL		MODEL	-			-			-	
OUTDOOR		MODEL	-			U-100PZ2E5			-	
Branch pipe		MODEL	-							
Performance test condition			ISO5151 / EN14511 / EN12102 / EN14825							
Power supply		Ø, Hz	1Ø 50Hz			1Ø 50Hz				
		V	220V	230V	240V	220V	230V	240V	Min	Max
COOLING	Capacity	kW	10.0	10.0	10.0	-	-	-	3.0	11.5
		BTU/h	34100	34100	34100	-	-	-	10200	39200
	Current	A	0.69	0.67	0.65	12.8	12.2	11.7	-	-
	Input power	W	80	80	80	2.670k	2.670k	2.670k	-	-
		TOTAL W	-			2.750k	2.750k	2.750k	560	4.100k
	Annual consumption	TOTAL kWh *4	-			-	1375	-	-	-
	EER/EER CLASS	TOTAL (W/W) *5/ ("A"~"G")	-	-	-	3.64	3.64/A	3.64	5.36	2.80
	Erp *6 Pdesign	kW	-	-	-	-	10.0	-	-	-
	Erp *6 SEER	(W/W)	-	-	-	-	6.5	-	-	-
	Erp *6 Annual consumption	kWh	-	-	-	-	535	-	-	-
	Erp *6 Class		-	-	-	-	A++	-	-	-
	Power factor	%	-	-	-	95	95	95	-	-
	Noise indoor	dB-A (H/M/L)	42/37/35			-			-	-
		Power Level dB	60/55/53			-			-	-
	Noise outdoor	dB-A (H/L)	-			52/-			-	-
		Power Level dB	-			70/-			-	-
HEATING	Capacity	kW	10.0	10.0	10.0	-	-	-	3.0	14.0
		BTU/h	34100	34100	34100	-	-	-	10200	47800
	Current	A	0.69	0.67	0.65	10.9	10.4	10.0	-	-
	Input power	W	80	80	80	2.280k	2.280k	2.280k	-	-
		TOTAL W	-			2.360k	2.360k	2.360k	560	4.000k
	COP/COP CLASS	TOTAL (W/W) *5/ ("A"~"G")	-	-	-	4.24	4.24/A	4.24	5.36	3.50
	Erp *6 Pdesign at -10°C	kW	-	-	-	-	10.0	-	-	-
	Erp *6 Tbivalent	°C	-	-	-	-	-7	-	-	-
	Erp *6 SCOP	(W/W)	-	-	-	-	4.2	-	-	-
	Erp *6 Annual consumption	kWh	-	-	-	-	3324	-	-	-
	Erp *6 elbu(-10°C)	kW	-	-	-	-	2.07	-	-	-
	Erp *6 Class		-	-	-	-	A+	-	-	-
	Power factor	%	-	-	-	95	95	95	-	-
	Noise indoor	dB-A (H/M/L)	42/37/35			-			-	-
		Power Level dB	60/55/53			-			-	-
	Noise outdoor	dB-A (H/L)	-			52/-			-	-
		Power Level dB	-			70/-			-	-
EXTRA LOW TEMP	Total capacity(kW) / Input power(W) / COP		-						-	
Max Current(A) / Max Input power(W)			0.69/80	0.67/80	0.65/80	25.0/5.25k	25.0/5.50k	25.0/5.70k	-	
Starting current(A) (Cooling/Heating)			-	-	-	12.8/10.9	12.2/10.4	11.7/10.0	-	
Comp output(W)						2.50k	2.50k	2.50k		
Network Impedance(ΩMAX.)			-			-			-	
Fan motor output (Indoor/Outdoor) W			111			120			-	
Moisture removal volume		L/h(Pt/h)	6.0		(12.6)	-			-	
External static pressure		Pa	-			-			-	
Indoor Air flow	Cooling	m³/min (ft³/min)	30.0/25.0/23.0 (1059)/(883)/(812)			-			-	-
Indoor Air flow	Heating	m³/min (ft³/min)	30.0/25.0/23.0 (1059)/(883)/(812)			-			-	-
Outdoor Air flow	Cooling	m³/min (ft³/min)	-			76.0 (2683)			-	-
Outdoor Air flow	Heating	m³/min (ft³/min)	-			70.0 (2472)			-	-
Refrigerant type / amount g(oz)			-			R32	2.60k	(91.7)	-	
Product dimension		Height mm(inch)	235 (9-1/4)			996 (39- 7/32)			-	
		Width mm(inch)	1590 (62-19/32)			980 (38-37/64)			-	
		Depth mm(inch)	690 (27-5/32)			370 (14- 9/16)			-	
Product dimension (Panel)		H×W×D mm, inch	-			-			-	
Packing dimension		Height mm(inch)	360 (14-11/64)			1134 (44-41/64)			-	
		Width mm(inch)	1655 (65-5/32)			1095 (43-7/64)			-	
		Depth mm(inch)	820 (32-9/32)			529 (20-53/64)			-	
Weight		(NET) kg(lb)	40 (88)			90 (199)			-	
		(GROSS) kg(lb)	49 (108)			98 (216)			-	
		Panel (NET) kg(lb)	-			-			-	
Layers limit (actually)			9 (10)			2 (3)			-	
Operation condition		Cool (DBT)	18°C ~ 32°C			-10°C ~ 43°C			-	
		Heat (DBT)	16°C ~ 30°C			-15°C ~ 24°C			-	
MAX WORKING PRESSURE HP/LP MPa (bar)			4.15/2.55 (41.5/25.5)						-	
PIPING	Pipe diameter mm (inch)		(Liquid)Ø9.52(3/8) (Gas)Ø15.88(5/8)			(Liquid)Ø9.52(3/8) (Gas)Ø15.88(5/8)			-	
PIPING	Connecting method, Standard length m(ft)		flared type, 5.0(16.4)			flared type, 5.0(16.4)			-	
PIPING	Pipe length range m (ft)		5 ~ 50m (16.4 ~ 164.0)						-	
PIPING	Indoor unit & Outdoor unit height difference m (ft)		15m(OD located lower)/30m(OD located higher) (49.2/98.4)						-	
PIPING	Add gas amount g/m (oz/ft)		45g/m (0.484)						-	
PIPING	Pipe length for additional gas m (ft)		30m (98.4)						-	

*1 In case it is necessary to indicate the air flow volume in (l/s), the value in (m³/min.) shall be multiplied by 16.7 and rounded down the decimal point.
*2 If the EUROVENT Certified models can be operated under the "extra-low"temperature condition, -7°C dry bulb and -8°C wet-bulb temperatures with rated voltage 230V shall be used.
*3 Network Impedance shall be applicable for EUROPE and CHINA models.
*4 The annual consumption is calculated by multiplying the input power at 230V(400V) by an average of 500 hours per year in cooling mode.
*5 EER and COP classification is at 230V(400V) only in accordance with EU directive 2002/31/EC.
*6 SEER and SCOP classification is at 230V(400V) only in accordance with EN-14825. For heating, SCOP indicates the value of only Average heating season, Other fiche data indicates in an attached sheet

Single -Type

1-1. Unit Specifications

PZ2

2. Ceiling Type S-125PT2E5B / U-125PZ2E5

INDOOR		MODEL	S-125PT2E5B			-			-	
PANEL		MODEL	-			-			-	
OUTDOOR		MODEL	-			U-125PZ2E5			-	
Branch pipe		MODEL	-							
Performance test condition			ISO5151 / EN14511 / EN12102 / EN14825							
Power supply		Ø, Hz	1Ø 50Hz			1Ø 50Hz				
		V	220V	230V	240V	220V	230V	240V	Min	Max
COOLING	Capacity	kW	12.5	12.5	12.5	-	-	-	3.2	13.5
		BTU/h	42700	42700	42700	-	-	-	10900	46100
	Current	A	0.89	0.86	0.83	17.6	16.9	16.2	-	-
	Input power	W	110	110	110	3.650k	3.650k	3.650k	-	-
		TOTAL W	-			3.760k	3.760k	3.760k	600	4.880k
	Annual consumption	TOTAL kWh *4	-			-	1880	-	-	-
	EER/EER CLASS	TOTAL (W/W) *5/ ("A"~"G")	-	-	-	3.32	3.32/A	3.32	5.33	2.77
	Erp *6 Pdesign	kW	-	-	-	-	12.5	-	-	-
	Erp *6 $\eta_{s,c}$	%	-	-	-	-	227.8	-	-	-
	Erp *6 Annual consumption	kWh	-	-	-	-	-	-	-	-
	Erp *6 Class		-	-	-	-	-	-	-	-
	Power factor	%	-	-	-	94	94	94	-	-
	Noise indoor	dB-A (H/M/L)	46/40/36			-			-	-
		Power Level dB	64/58/54			-			-	-
	Noise outdoor	dB-A (H/L)	-			55/-			-	-
		Power Level dB	-			73/-			-	-
HEATING	Capacity	kW	12.5	12.5	12.5	-	-	-	3.3	15.0
		BTU/h	42700	42700	42700	-	-	-	11300	51200
	Current	A	0.89	0.86	0.83	15.0	14.3	13.7	-	-
	Input power	W	110	110	110	3.100k	3.100k	3.100k	-	-
		TOTAL W	-			3.210k	3.210k	3.210k	730	4.400k
	COP/COP CLASS	TOTAL (W/W) *5/ ("A"~"G")	-	-	-	3.89	3.89/A	3.89	4.52	3.41
	Erp *6 Pdesign at -10°C	kW	-	-	-	-	12.5	-	-	-
	Erp *6 Tbivalent	°C	-	-	-	-	-7	-	-	-
	Erp *6 $\eta_{s,h}$	%	-	-	-	-	146.9	-	-	-
	Erp *6 Annual consumption	kWh	-	-	-	-	-	-	-	-
	Erp *6 elbu(-10°C)	kW	-	-	-	-	2.70	-	-	-
	Erp *6 Class		-	-	-	-	-	-	-	-
	Power factor	%	-	-	-	94	94	94	-	-
	Noise indoor	dB-A (H/M/L)	46/40/36			-			-	-
		Power Level dB	64/58/54						-	-
	Noise outdoor	dB-A (H/L)	-			55/-			-	-
		Power Level dB	-			73/-			-	-
EXTRA LOW TEMP	Total capacity(kW) / Input power(W) / COP		-						-	
Max Current(A) / Max Input power(W)			0.89/110	0.86/110	0.83/110	29.0/6.00k	29.0/6.30k	29.0/6.60k	-	
Starting current(A) (Cooling/Heating)			-	-	-	17.6/15.0	16.9/14.3	16.2/13.7	-	
Comp output(W)			-			2.80k	2.80k	2.80k		
Network Impedance(ΩMAX.)			-			-			-	
Fan motor output (Indoor/Outdoor) W			111			120			-	
Moisture removal volume		L/h(Pt/h)	7.9		(16.6)	-			-	
External static pressure		Pa	-			-			-	
Indoor Air flow	Cooling	m³/min (ft³/min)	34.0/28.0/24.0 (1201)/(989)/(848)			-			-	-
	Heating	m³/min (ft³/min)	34.0/28.0/24.0 (1201)/(989)/(848)			-			-	-
Outdoor Air flow	Cooling	m³/min (ft³/min)	-			86.0 (3037)			-	-
	Heating	m³/min (ft³/min)	-			78.0 (2754)			-	-
Refrigerant type / amount g(oz)			-			R32 2.98k (105.1)			-	
Product dimension		Height mm(inch)	235 (9-1/4)			996 (39- 7/32)			-	
		Width mm(inch)	1590 (62-19/32)			980 (38-37/64)			-	
		Depth mm(inch)	690 (27-5/32)			370 (14- 9/16)			-	
Product dimension (Panel)		H×W×D mm, inch	-			-			-	
Packing dimension		Height mm(inch)	360 (14-11/64)			1134 (44-41/64)			-	
		Width mm(inch)	1655 (65-5/32)			1095 (43-7/64)			-	
		Depth mm(inch)	820 (32-9/32)			529 (20-53/64)			-	
Weight		(NET) kg(lb)	40 (88)			94 (207)			-	
		(GROSS) kg(lb)	49 (108)			102 (224)			-	
		Panel (NET) kg(lb)	-			-			-	
Layers limit (actually)			9 (10)			2 (3)			-	
Operation condition		Cool (DBT)	18°C ~ 32°C			-10°C ~ 43°C			-	
		Heat (DBT)	16°C ~ 30°C			-15°C ~ 24°C			-	
MAX WORKING PRESSURE HP/LP MPa (bar)			4.15/2.55 (41.5/25.5)							
PIPING	Pipe diameter mm (inch)		(Liquid)Ø9.52(3/8) (Gas)Ø15.88(5/8)			(Liquid)Ø9.52(3/8) (Gas)Ø15.88(5/8)			-	
	Connecting method, Standard length m(ft)		flared type, 5.0(16.4)			flared type, 5.0(16.4)			-	
	Pipe length range m (ft)		5 ~ 50m (16.4 ~ 164.0)						-	
	Indoor unit & Outdoor unit height difference m (ft)		15m(OD located lower)/30m(OD located higher) (49.2/98.4)						-	
	Add gas amount g/m (oz/ft)		45g/m (0.484)						-	
	Pipe length for additional gas m (ft)		30m (98.4)						-	

*1 In case it is necessary to indicate the air flow volume in (l/s), the value in (m³/min.) shall be multiplied by 16.7 and rounded down the decimal point.
*2 If the EUROVENT Certified models can be operated under the "extra-low"temperature condition, -7°C dry bulb and -8°C wet-bulb temperatures with rated voltage 230V shall be used.
*3 Network Impedance shall be applicable for EUROPE and CHINA models.
*4 The annual consumption is calculated by multiplying the input power at 230V(400V) by an average of 500 hours per year in cooling mode.
*5 EER and COP classification is at 230V(400V) only in accordance with EU directive 2002/31/EC.
*6 $\eta_{s,c}$ and $\eta_{s,h}$ classification is at 230V(400V) only in accordance with EN-14825. For heating, $\eta_{s,h}$ indicates the value of only Average heating season.

Single -Type

1-1. Unit Specifications

PZ2

2. Ceiling Type S-140PT2E5B / U-140PZ2E5

INDOOR		MODEL	S-140PT2E5B			-			-	
PANEL		MODEL	-			-			-	
OUTDOOR		MODEL	-			U-140PZ2E5			-	
Branch pipe		MODEL	-							
Performance test condition			ISO5151 / EN14511 / EN12102 / EN14825							
Power supply		Ø, Hz	1Ø 50Hz			1Ø 50Hz				
		V	220V	230V	240V	220V	230V	240V	Min	Max
COOLING	Capacity	kW	14.0	14.0	14.0	-	-	-	3.3	15.0
		BTU/h	47800	47800	47800	-	-	-	11300	51200
	Current	A	0.94	0.91	0.88	22.1	21.2	20.3	-	-
	Input power	W	120	120	120	4.580k	4.580k	4.580k	-	-
		TOTAL W	-			4.700k	4.700k	4.700k	620	5.500k
	Annual consumption	TOTAL kWh *4	-			-	2350	-	-	-
	EER/EER CLASS	TOTAL (W/W) *5/ ("A"~"G")	-	-	-	2.98	2.98/C	2.98	5.32	2.73
	Erp *6 Pdesign	kW	-	-	-	-	14.0	-	-	-
	Erp *6 $\eta_{s,c}$	%	-	-	-	-	216.6	-	-	-
	Erp *6 Annual consumption	kWh	-	-	-	-	-	-	-	-
	Erp *6 Class		-	-	-	-	-	-	-	-
	Power factor	%	-	-	-	94	94	94	-	-
	Noise indoor	dB-A (H/M/L)	47/41/37			-			-	-
		Power Level dB	65/59/55			-			-	-
	Noise outdoor	dB-A (H/L)	-			56/-			-	-
		Power Level dB	-			74/-			-	-
HEATING	Capacity	kW	14.0	14.0	14.0	-	-	-	3.4	16.0
		BTU/h	47800	47800	47800	-	-	-	11600	54600
	Current	A	0.94	0.91	0.88	17.7	16.9	16.2	-	-
	Input power	W	120	120	120	3.660k	3.660k	3.660k	-	-
		TOTAL W	-			3.780k	3.780k	3.780k	620	5.200k
	COP/COP CLASS	TOTAL (W/W) *5/ ("A"~"G")	-	-	-	3.70	3.70/A	3.70	5.48	3.08
	Erp *6 Pdesign at -10°C	kW	-	-	-	-	13.6	-	-	-
	Erp *6 Tbivalent	°C	-	-	-	-	-7	-	-	-
	Erp *6 $\eta_{s,h}$	%	-	-	-	-	144.8	-	-	-
	Erp *6 Annual consumption	kWh	-	-	-	-	-	-	-	-
	Erp *6 elbu(-10°C)	kW	-	-	-	-	3.00	-	-	-
	Erp *6 Class		-	-	-	-	-	-	-	-
	Power factor	%	-	-	-	94	94	94	-	-
	Noise indoor	dB-A (H/M/L)	47/41/37			-			-	-
		Power Level dB	65/59/55						-	-
	Noise outdoor	dB-A (H/L)	-			56/-			-	-
		Power Level dB	-			74/-			-	-
EXTRA LOW TEMP	Total capacity(kW) / Input power(W) / COP		-						-	
Max Current(A) / Max Input power(W)			0.94/120	0.91/120	0.88/120	30.0/6.25k	30.0/6.50k	30.0/6.80k	-	
Starting current(A) (Cooling/Heating)			-	-	-	22.1/17.7	21.2/16.9	20.3/16.2	-	
Comp output(W)			-			3.00k	3.00k	3.00k		
Network Impedance(ΩMAX.)			-			-			-	
Fan motor output (Indoor/Outdoor) W			111			120			-	
Moisture removal volume		L/h(Pt/h)	9.0		(18.9)	-			-	
External static pressure		Pa	-			-			-	
Indoor Air flow	Cooling	m³/min (ft³/min)	35.0/29.0/25.0 (1236)/(1024)/(883)			-			-	-
	Heating	m³/min (ft³/min)	35.0/29.0/25.0 (1236)/(1024)/(883)			-			-	-
Outdoor Air flow	Cooling	m³/min (ft³/min)	-			89.0 (3143)			-	-
	Heating	m³/min (ft³/min)	-			83.0 (2931)			-	-
Refrigerant type / amount g(oz)			-			R32 2.98k (105.1)			-	
Product dimension		Height mm(inch)	235 (9-1/4)			996 (39- 7/32)			-	
		Width mm(inch)	1590 (62-19/32)			980 (38-37/64)			-	
		Depth mm(inch)	690 (27-5/32)			370 (14- 9/16)			-	
Product dimension (Panel)		H×W×D mm, inch	-			-			-	
Packing dimension		Height mm(inch)	360 (14-11/64)			1134 (44-41/64)			-	
		Width mm(inch)	1655 (65-5/32)			1095 (43-7/64)			-	
		Depth mm(inch)	820 (32-9/32)			529 (20-53/64)			-	
Weight		(NET) kg(lb)	40 (88)			94 (207)			-	
		(GROSS) kg(lb)	49 (108)			102 (224)			-	
		Panel (NET) kg(lb)	-			-			-	
Layers limit (actually)			9 (10)			2 (3)			-	
Operation condition		Cool (DBT)	18°C ~ 32°C			-10°C ~ 43°C			-	
		Heat (DBT)	16°C ~ 30°C			-15°C ~ 24°C			-	
MAX WORKING PRESSURE HP/LP MPa (bar)			4.15/2.55 (41.5/25.5)							
PIPING	Pipe diameter mm (inch)		(Liquid)Ø9.52(3/8) (Gas)Ø15.88(5/8)			(Liquid)Ø9.52(3/8) (Gas)Ø15.88(5/8)			-	
	Connecting method, Standard length m(ft)		flared type, 5.0(16.4)			flared type, 5.0(16.4)			-	
	Pipe length range m (ft)		5 ~ 50m (16.4 ~ 164.0)						-	
	Indoor unit & Outdoor unit height difference m (ft)		15m(OD located lower)/30m(OD located higher) (49.2/98.4)						-	
	Add gas amount g/m (oz/ft)		45g/m (0.484)						-	
	Pipe length for additional gas m (ft)		30m (98.4)						-	

*1 In case it is necessary to indicate the air flow volume in (l/s), the value in (m³/min.) shall be multiplied by 16.7 and rounded down the decimal point.
*2 If the EUROVENT Certified models can be operated under the "extra-low"temperature condition, -7°C dry bulb and -8°C wet-bulb temperatures with rated voltage 230V shall be used.
*3 Network Impedance shall be applicable for EUROPE and CHINA models.
*4 The annual consumption is calculated by multiplying the input power at 230V(400V) by an average of 500 hours per year in cooling mode.
*5 EER and COP classification is at 230V(400V) only in accordance with EU directive 2002/31/EC.
*6 $\eta_{s,c}$ and $\eta_{s,h}$ classification is at 230V(400V) only in accordance with EN-14825. For heating, $\eta_{s,h}$ indicates the value of only Average heating season.

Simultaneous (Twin) -Type

1-1. Unit Specifications

PZ2

2. Ceiling Type S-50PT2E5B×2 / U-100PZ2E8

INDOOR		MODEL	S-50PT2E5B×2			-			-	
PANEL		MODEL	-			-			-	
OUTDOOR		MODEL	-			U-100PZ2E8			-	
Branch pipe		MODEL	-							
Performance test condition			ISO5151 / EN14511 / EN12102 / EN14825							
Power supply		Ø, Hz	1Ø 50Hz			3Ø 50Hz				
		V	220V	230V	240V	380V	400V	415V	Min	Max
COOLING	Capacity	kW	10.0	10.0	10.0	-	-	-	3.0	11.5
		BTU/h	34100	34100	34100	-	-	-	10200	39200
	Current	A	0.39×2	0.38×2	0.37×2	4.35	4.15	4.00	-	-
	Input power	W	40×2	40×2	40×2	2.670k	2.670k	2.670k	-	-
		TOTAL W	-			2.750k	2.750k	2.750k	560	4.100k
	Annual consumption	TOTAL kWh *4	-			-	1375	-	-	-
	EER/EER CLASS	TOTAL (W/W) *5/ ("A"~"G")	-	-	-	3.82	3.82/A	3.82	5.36	2.80
	Erp *6 Pdesign	kW	-	-	-	-	10.0	-	-	-
	Erp *6 SEER	(W/W)	-	-	-	-	6.3	-	-	-
	Erp *6 Annual consumption	kWh	-	-	-	-	554	-	-	-
	Erp *6 Class		-	-	-	-	A++	-	-	-
	Power factor	%	-	-	-	93	93	93	-	-
	Noise indoor	dB-A (H/M/L)	37×2/33×2/29×2			-			-	-
		Power Level dB	55×2/51×2/47×2			-			-	-
	Noise outdoor	dB-A (H/L)	-			52/-			-	-
		Power Level dB	-			70/-			-	-
HEATING	Capacity	kW	10.0	10.0	10.0	-	-	-	3.0	14.0
		BTU/h	34100	34100	34100	-	-	-	10200	47800
	Current	A	0.39×2	0.38×2	0.37×2	3.70	3.55	3.40	-	-
	Input power	W	40×2	40×2	40×2	2.280k	2.280k	2.280k	-	-
		TOTAL W	-			2.360k	2.360k	2.360k	560	4.000k
	COP/COP CLASS	TOTAL (W/W) *5/ ("A"~"G")	-	-	-	4.93	4.93/A	4.93	5.36	3.50
	Erp *6 Pdesign at -10°C	kW	-	-	-	-	10.0	-	-	-
	Erp *6 Tbivalent	°C	-	-	-	-	-7	-	-	-
	Erp *6 SCOP	(W/W)	-	-	-	-	4	-	-	-
	Erp *6 Annual consumption	kWh	-	-	-	-	3495	-	-	-
	Erp *6 elbu(-10°C)	kW	-	-	-	-	2.07	-	-	-
	Erp *6 Class		-	-	-	-	A+	-	-	-
	Power factor	%	-	-	-	93	93	93	-	-
	Noise indoor	dB-A (H/M/L)	37×2/33×2/29×2			-			-	-
		Power Level dB	55×2/51×2/47×2			-			-	-
	Noise outdoor	dB-A (H/L)	-			52/-			-	-
		Power Level dB	-			70/-			-	-
EXTRA LOW TEMP	Total capacity(kW) / Input power(W) / COP		-						-	
Max Current(A) / Max Input power(W)			0.39×2/80×2	0.38×2/80×2	0.37×2/80×2	9.00/5.55k	9.00/5.80k	9.00/6.05k	-	
Starting current(A) (Cooling/Heating)			-	-	-	4.35/3.70	4.15/3.55	4.00/3.40	-	
Comp output(W)						2.50k	2.50k	2.50k		
Network Impedance(ΩMAX.)			-			-			-	
Fan motor output (Indoor/Outdoor) W			43			120			-	
Moisture removal volume		L/h(Pt/h)	5.6	(2.8×2)	(11.8)	-			-	
External static pressure		Pa	-			-			-	
Indoor Air flow	Cooling	m³/min (ft³/min)	15.0×2/12.5×2/10.5×2 (530×2)/(441×2)/(371×2)			-			-	-
	Heating	m³/min (ft³/min)	15.0×2/12.5×2/10.5×2 (530×2)/(441×2)/(371×2)			-			-	-
Outdoor Air flow	Cooling	m³/min (ft³/min)	-			76.0 (2683)			-	-
	Heating	m³/min (ft³/min)	-			70.0 (2472)			-	-
Refrigerant type / amount g(oz)			-			R32	2.60k	(91.7)	-	
Product dimension		Height mm(inch)	235 (9-1/4)			996 (39- 7/32)			-	
		Width mm(inch)	960 (37-25/32)			980 (38-37/64)			-	
		Depth mm(inch)	690 (27-5/32)			370 (14- 9/16)			-	
Product dimension (Panel)		H×W×D mm, inch	-			-			-	
Packing dimension		Height mm(inch)	360 (14-11/64)			1134 (44-41/64)			-	
		Width mm(inch)	1025 (40-23/64)			1095 (43-7/64)			-	
		Depth mm(inch)	820 (32-9/32)			529 (20-53/64)			-	
Weight		(NET) kg(lb)	27 (60)			90 (199)			-	
		(GROSS) kg(lb)	34 (75)			98 (216)			-	
		Panel (NET) kg(lb)	-			-			-	
Layers limit (actually)			9 (10)			2 (3)			-	
Operation condition		Cool (DBT)	18°C ~ 32°C			-10°C ~ 43°C			-	
		Heat (DBT)	16°C ~ 30°C			-15°C ~ 24°C			-	
MAX WORKING PRESSURE HP/LP MPa (bar)			4.15/2.55 (41.5/25.5)						-	
PIPING	Pipe diameter mm (inch)		(Liquid)Ø6.35(1/4) (Gas)Ø12.7(1/2)			(Liquid)Ø9.52(3/8) (Gas)Ø15.88(5/8)			-	
	Connecting method, Standard length m(ft)		flared type, 5.0(16.4)			flared type, 5.0(16.4)			-	
	Pipe length range m (ft)		5 ~ 50m (16.4 ~ 164.0)						-	
	Indoor unit & Outdoor unit height difference m (ft)		15m(OD located lower)/30m(OD located higher) (49.2/98.4)						-	
	Add gas amount g/m (oz/ft)		45g/m (0.484)						-	
	Pipe length for additional gas m (ft)		30m (98.4)						-	

*1 In case it is necessary to indicate the air flow volume in (l/s), the value in (m³/min.) shall be multiplied by 16.7 and rounded down the decimal point.
*2 If the EUROVENT Certified models can be operated under the "extra-low"temperature condition, -7°C dry bulb and -8°C wet-bulb temperatures with rated voltage 230V shall be used.
*3 Network Impedance shall be applicable for EUROPE and CHINA models.
*4 The annual consumption is calculated by multiplying the input power at 230V(400V) by an average of 500 hours per year in cooling mode.
*5 EER and COP classification is at 230V(400V) only in accordance with EU directive 2002/31/EC.
*6 SEER and SCOP classification is at 230V(400V) only in accordance with EN-14825. For heating, SCOP indicates the value of only Average heating season, Other fiche data indicates in an attached sheet

Simultaneous (Twin) -Type

1-1. Unit Specifications

PZ2

2. Ceiling Type S-60PT2E5B×2 / U-125PZ2E8

INDOOR		MODEL	S-60PT2E5B×2			-			-	
PANEL		MODEL	-			-			-	
OUTDOOR		MODEL	-			U-125PZ2E8			-	
Branch pipe		MODEL	-							
Performance test condition			ISO5151 / EN14511 / EN12102 / EN14825							
Power supply		Ø, Hz	1Ø 50Hz			3Ø 50Hz				
		V	220V	230V	240V	380V	400V	415V	Min	Max
COOLING	Capacity	kW	12.5	12.5	12.5	-	-	-	3.2	13.5
		BTU/h	42700	42700	42700	-	-	-	10900	46100
	Current	A	0.42×2	0.41×2	0.40×2	5.90	5.60	5.40	-	-
	Input power	W	50×2	50×2	50×2	3.660k	3.660k	3.660k	-	-
		TOTAL W	-			3.760k	3.760k	3.760k	600	4.880k
	Annual consumption	TOTAL kWh *4	-			-	1880	-	-	-
	EER/EER CLASS	TOTAL (W/W) *5/ ("A"~"G")	-	-	-	3.32	3.32/A	3.32	5.33	2.77
	Erp *6 Pdesign	kW	-	-	-	-	12.5	-	-	-
	Erp *6 $\eta_{s,c}$	%	-	-	-	-	240.5	-	-	-
	Erp *6 Annual consumption	kWh	-	-	-	-	-	-	-	-
	Erp *6 Class		-	-	-	-	-	-	-	-
	Power factor	%	-	-	-	94	94	94	-	-
	Noise indoor	dB-A (H/M/L)	38×2/34×2/30×2			-			-	-
		Power Level dB	56×2/52×2/48×2			-			-	-
	Noise outdoor	dB-A (H/L)	-			55/-			-	-
		Power Level dB	-			73/-			-	-
HEATING	Capacity	kW	12.5	12.5	12.5	-	-	-	3.3	15.0
		BTU/h	42700	42700	42700	-	-	-	11300	51200
	Current	A	0.42×2	0.41×2	0.40×2	5.00	4.80	4.60	-	-
	Input power	W	50×2	50×2	50×2	3.110k	3.110k	3.110k	-	-
		TOTAL W	-			3.210k	3.210k	3.210k	730	4.400k
	COP/COP CLASS	TOTAL (W/W) *5/ ("A"~"G")	-	-	-	3.89	3.89/A	3.89	4.52	3.41
	Erp *6 Pdesign at -10°C	kW	-	-	-	-	12.5	-	-	-
	Erp *6 Tbivalent	°C	-	-	-	-	-7	-	-	-
	Erp *6 $\eta_{s,h}$	%	-	-	-	-	147.6	-	-	-
	Erp *6 Annual consumption	kWh	-	-	-	-	-	-	-	-
	Erp *6 elbu(-10°C)	kW	-	-	-	-	2.90	-	-	-
	Erp *6 Class		-	-	-	-	-	-	-	-
	Power factor	%	-	-	-	94	94	94	-	-
	Noise indoor	dB-A (H/M/L)	38×2/34×2/30×2			-			-	-
		Power Level dB	56×2/52×2/48×2						-	-
	Noise outdoor	dB-A (H/L)	-			55/-			-	-
		Power Level dB	-			73/-			-	-
EXTRA LOW TEMP	Total capacity(kW) / Input power(W) / COP		-						-	
Max Current(A) / Max Input power(W)			0.42×2/50×2	0.41×2/50×2	0.40×2/50×2	10.0/6.20k	10.0/6.50k	10.0/6.75k	-	
Starting current(A) (Cooling/Heating)			-	-	-	5.90/5.00	5.60/4.80	5.40/4.60	-	
Comp output(W)			-			2.80k	2.80k	2.80k		
Network Impedance(ΩMAX.)			-			-			-	
Fan motor output (Indoor/Outdoor) W			74			120			-	
Moisture removal volume		L/h(Pt/h)	6.8	(3.4×2)	(14.3)	-			-	
External static pressure		Pa	-			-			-	
Indoor Air flow	Cooling	m³/min (ft³/min)	20.0×2/17.0×2/14.5×2 (706×2)/(600×2)/(512×2)			-			-	-
	Heating	m³/min (ft³/min)	20.0×2/17.0×2/14.5×2 (706×2)/(600×2)/(512×2)			-			-	-
Outdoor Air flow	Cooling	m³/min (ft³/min)	-			86.0 (3037)			-	-
	Heating	m³/min (ft³/min)	-			78.0 (2754)			-	-
Refrigerant type / amount g(oz)			-			R32	2.98k	(105.1)	-	
Product dimension		Height mm(inch)	235 (9-1/4)			996 (39- 7/32)			-	
		Width mm(inch)	1275 (50-3/16)			980 (38-37/64)			-	
		Depth mm(inch)	690 (27-5/32)			370 (14- 9/16)			-	
Product dimension (Panel)		H×W×D mm, inch	-			-			-	
Packing dimension		Height mm(inch)	360 (14-11/64)			1134 (44-41/64)			-	
		Width mm(inch)	1340 (52-3/4)			1095 (43-7/64)			-	
		Depth mm(inch)	820 (32-9/32)			529 (20-53/64)			-	
Weight		(NET) kg(lb)	33 (73)			94 (207)			-	
		(GROSS) kg(lb)	42 (93)			102 (224)			-	
		Panel (NET) kg(lb)	-			-			-	
Layers limit (actually)			9 (10)			2 (3)			-	
Operation condition		Cool (DBT)	18°C ~ 32°C			-10°C ~ 43°C			-	
		Heat (DBT)	16°C ~ 30°C			-15°C ~ 24°C			-	
MAX WORKING PRESSURE HP/LP MPa (bar)			4.15/2.55 (41.5/25.5)							
PIPING	Pipe diameter mm (inch)		(Liquid)Ø9.52(3/8) (Gas)Ø15.88(5/8)			(Liquid)Ø9.52(3/8) (Gas)Ø15.88(5/8)			-	
	Connecting method, Standard length m(ft)		flared type, 5.0(16.4)			flared type, 5.0(16.4)			-	
	Pipe length range m (ft)		5 ~ 50m (16.4 ~ 164.0)						-	
	Indoor unit & Outdoor unit height difference m (ft)		15m(OD located lower)/30m(OD located higher) (49.2/98.4)						-	
	Add gas amount g/m (oz/ft)		45g/m (0.484)						-	
	Pipe length for additional gas m (ft)		30m (98.4)						-	

*1 In case it is necessary to indicate the air flow volume in (l/s), the value in (m³/min.) shall be multiplied by 16.7 and rounded down the decimal point.
*2 If the EUROVENT Certified models can be operated under the "extra-low"temperature condition, -7°C dry bulb and -8°C wet-bulb temperatures with rated voltage 230V shall be used.
*3 Network Impedance shall be applicable for EUROPE and CHINA models.
*4 The annual consumption is calculated by multiplying the input power at 230V(400V) by an average of 500 hours per year in cooling mode.
*5 EER and COP classification is at 230V(400V) only in accordance with EU directive 2002/31/EC.
*6 $\eta_{s,c}$ and $\eta_{s,h}$ classification is at 230V(400V) only in accordance with EN-14825. For heating, $\eta_{s,h}$ indicates the value of only Average heating season.

Simultaneous (Twin) -Type

1-1. Unit Specifications

PZ2

2. Ceiling Type S-71PT2E5B×2 / U-140PZ2E8

INDOOR		MODEL	S-71PT2E5B×2			-			-	
PANEL		MODEL	-			-			-	
OUTDOOR		MODEL	-			U-140PZ2E8			-	
Branch pipe		MODEL	-							
Performance test condition			ISO5151 / EN14511 / EN12102 / EN14825							
Power supply		Ø, Hz	1Ø 50Hz			3Ø 50Hz				
		V	220V	230V	240V	380V	400V	415V	Min	Max
COOLING	Capacity	kW	14.0	14.0	14.0	-	-	-	3.3	15.0
		BTU/h	47800	47800	47800	-	-	-	11300	51200
	Current	A	0.45×2	0.44×2	0.43×2	7.40	7.05	6.80	-	-
	Input power	W	55×2	55×2	55×2	4.590k	4.590k	4.590k	-	-
		TOTAL W	-			4.700k	4.700k	4.700k	620	5.500k
	Annual consumption	TOTAL kWh *4	-			-	2350	-	-	-
	EER/EER CLASS	TOTAL (W/W) *5/ ("A"~"G")	-	-	-	2.98	2.98/C	2.98	5.32	2.73
	Erp *6 Pdesign	kW	-	-	-	-	14.0	-	-	-
	Erp *6 $\eta_{s,c}$	%	-	-	-	-	226.9	-	-	-
	Erp *6 Annual consumption	kWh	-	-	-	-	-	-	-	-
	Erp *6 Class		-	-	-	-	-	-	-	-
	Power factor	%	-	-	-	94	94	94	-	-
	Noise indoor	dB-A (H/M/L)	39×2/35×2/31×2			-			-	-
		Power Level dB	57×2/53×2/49×2			-			-	-
	Noise outdoor	dB-A (H/L)	-			56/-			-	-
		Power Level dB	-			74/-			-	-
HEATING	Capacity	kW	14.0	14.0	14.0	-	-	-	3.4	16.0
		BTU/h	47800	47800	47800	-	-	-	11600	54600
	Current	A	0.45×2	0.44×2	0.43×2	5.95	5.65	5.45	-	-
	Input power	W	55×2	55×2	55×2	3.680k	3.680k	3.680k	-	-
		TOTAL W	-			3.780k	3.780k	3.780k	620	5.200k
	COP/COP CLASS	TOTAL (W/W) *5/ ("A"~"G")	-	-	-	3.70	3.70/A	3.70	5.48	3.08
	Erp *6 Pdesign at -10°C	kW	-	-	-	-	13.6	-	-	-
	Erp *6 Tbivalent	°C	-	-	-	-	-7	-	-	-
	Erp *6 $\eta_{s,h}$	%	-	-	-	-	145.4	-	-	-
	Erp *6 Annual consumption	kWh	-	-	-	-	-	-	-	-
	Erp *6 elbu(-10°C)	kW	-	-	-	-	3.20	-	-	-
	Erp *6 Class		-	-	-	-	-	-	-	-
	Power factor	%	-	-	-	94	94	94	-	-
	Noise indoor	dB-A (H/M/L)	39×2/35×2/31×2			-			-	-
		Power Level dB	57×2/53×2/49×2						-	-
	Noise outdoor	dB-A (H/L)	-			56/-			-	-
		Power Level dB	-			74/-			-	-
EXTRA LOW TEMP	Total capacity(kW) / Input power(W) / COP		-						-	
Max Current(A) / Max Input power(W)			0.45×2/55×2	0.44×2/55×2	0.43×2/55×2	10.5/6.50k	10.5/6.85k	10.5/7.10k	-	
Starting current(A) (Cooling/Heating)			-	-	-	7.40/5.95	7.05/5.65	6.80/5.45	-	
Comp output(W)			-			3.00k	3.00k	3.00k		
Network Impedance(ΩMAX.)			-			-			-	
Fan motor output (Indoor/Outdoor) W			74			120			-	
Moisture removal volume		L/h(Pt/h)	8.4	(4.2×2)	(17.6)	-			-	
External static pressure		Pa	-			-			-	
Indoor Air flow	Cooling	m³/min (ft³/min)	21.0×2/18.0×2/15.5×2 (742×2)/(636×2)/(547×2)			-			-	-
	Heating	m³/min (ft³/min)	21.0×2/18.0×2/15.5×2 (742×2)/(636×2)/(547×2)			-			-	-
Outdoor Air flow	Cooling	m³/min (ft³/min)	-			89.0 (3143)			-	-
	Heating	m³/min (ft³/min)	-			83.0 (2931)			-	-
Refrigerant type / amount g(oz)			-			R32	2.98k	(105.1)	-	
Product dimension		Height mm(inch)	235 (9-1/4)			996 (39- 7/32)			-	
		Width mm(inch)	1275 (50-3/16)			980 (38-37/64)			-	
		Depth mm(inch)	690 (27-5/32)			370 (14- 9/16)			-	
Product dimension (Panel)		H×W×D mm, inch	-			-			-	
Packing dimension		Height mm(inch)	360 (14-11/64)			1134 (44-41/64)			-	
		Width mm(inch)	1340 (52-3/4)			1095 (43-7/64)			-	
		Depth mm(inch)	820 (32-9/32)			529 (20-53/64)			-	
Weight		(NET) kg(lb)	33 (73)			94 (207)			-	
		(GROSS) kg(lb)	42 (93)			102 (224)			-	
		Panel (NET) kg(lb)	-			-			-	
Layers limit (actually)			9 (10)			2 (3)			-	
Operation condition		Cool (DBT)	18°C ~ 32°C			-10°C ~ 43°C			-	
		Heat (DBT)	16°C ~ 30°C			-15°C ~ 24°C			-	
MAX WORKING PRESSURE HP/LP MPa (bar)			4.15/2.55 (41.5/25.5)							
PIPING	Pipe diameter mm (inch)		(Liquid)Ø9.52(3/8) (Gas)Ø15.88(5/8)			(Liquid)Ø9.52(3/8) (Gas)Ø15.88(5/8)			-	
	Connecting method, Standard length m(ft)		flared type, 5.0(16.4)			flared type, 5.0(16.4)			-	
	Pipe length range m (ft)		5 ~ 50m (16.4 ~ 164.0)						-	
	Indoor unit & Outdoor unit height difference m (ft)		15m(OD located lower)/30m(OD located higher) (49.2/98.4)						-	
	Add gas amount g/m (oz/ft)		45g/m (0.484)						-	
	Pipe length for additional gas m (ft)		30m (98.4)						-	

*1 In case it is necessary to indicate the air flow volume in (l/s), the value in (m³/min.) shall be multiplied by 16.7 and rounded down the decimal point.
*2 If the EUROVENT Certified models can be operated under the "extra-low"temperature condition, -7°C dry bulb and -8°C wet-bulb temperatures with rated voltage 230V shall be used.
*3 Network Impedance shall be applicable for EUROPE and CHINA models.
*4 The annual consumption is calculated by multiplying the input power at 230V(400V) by an average of 500 hours per year in cooling mode.
*5 EER and COP classification is at 230V(400V) only in accordance with EU directive 2002/31/EC.
*6 $\eta_{s,c}$ and $\eta_{s,h}$ classification is at 230V(400V) only in accordance with EN-14825. For heating, $\eta_{s,h}$ indicates the value of only Average heating season.

Single -Type

1-1. Unit Specifications

PZ2

2. Ceiling Type S-100PT2E5B / U-100PZ2E8

INDOOR		MODEL	S-100PT2E5B			-			-	
PANEL		MODEL	-			-			-	
OUTDOOR		MODEL	-			U-100PZ2E8			-	
Branch pipe		MODEL	-							
Performance test condition			ISO5151 / EN14511 / EN12102 / EN14825							
Power supply		Ø, Hz	1Ø 50Hz			3Ø 50Hz				
		V	220V	230V	240V	380V	400V	415V	Min	Max
COOLING	Capacity	kW	10.0	10.0	10.0	-	-	-	3.0	11.5
		BTU/h	34100	34100	34100	-	-	-	10200	39200
	Current	A	0.69	0.67	0.65	4.35	4.15	4.00	-	-
	Input power	W	80	80	80	2.670k	2.670k	2.670k	-	-
		TOTAL W	-			2.750k	2.750k	2.750k	560	4.100k
	Annual consumption	TOTAL kWh *4	-			-	1375	-	-	-
	EER/EER CLASS	TOTAL (W/W) *5/ ("A"~"G")	-	-	-	3.82	3.82/A	3.82	5.36	2.80
	Erp *6 Pdesign	kW	-	-	-	-	10.0	-	-	-
	Erp *6 SEER	(W/W)	-	-	-	-	6.5	-	-	-
	Erp *6 Annual consumption	kWh	-	-	-	-	538	-	-	-
	Erp *6 Class		-	-	-	-	A++	-	-	-
	Power factor	%	-	-	-	93	93	93	-	-
	Noise indoor	dB-A (H/M/L)	42/37/35			-			-	-
		Power Level dB	60/55/53			-			-	-
	Noise outdoor	dB-A (H/L)	-			52/-			-	-
		Power Level dB	-			70/-			-	-
HEATING	Capacity	kW	10.0	10.0	10.0	-	-	-	3.0	14.0
		BTU/h	34100	34100	34100	-	-	-	10200	47800
	Current	A	0.69	0.67	0.65	3.70	3.55	3.40	-	-
	Input power	W	80	80	80	2.280k	2.280k	2.280k	-	-
		TOTAL W	-			2.360k	2.360k	2.360k	560	4.000k
	COP/COP CLASS	TOTAL (W/W) *5/ ("A"~"G")	-	-	-	4.93	4.93/A	4.93	5.36	3.50
	Erp *6 Pdesign at -10°C	kW	-	-	-	-	10.0	-	-	-
	Erp *6 Tbivalent	°C	-	-	-	-	-7	-	-	-
	Erp *6 SCOP	(W/W)	-	-	-	-	4.2	-	-	-
	Erp *6 Annual consumption	kWh	-	-	-	-	3324	-	-	-
	Erp *6 elbu(-10°C)	kW	-	-	-	-	2.07	-	-	-
	Erp *6 Class		-	-	-	-	A+	-	-	-
	Power factor	%	-	-	-	93	93	93	-	-
	Noise indoor	dB-A (H/M/L)	42/37/35			-			-	-
		Power Level dB	60/55/53			-			-	-
	Noise outdoor	dB-A (H/L)	-			52/-			-	-
		Power Level dB	-			70/-			-	-
EXTRA LOW TEMP	Total capacity(kW) / Input power(W) / COP		-						-	
Max Current(A) / Max Input power(W)			0.69/80	0.67/80	0.65/80	9.00/5.55k	9.00/5.80k	9.00/6.05k	-	
Starting current(A) (Cooling/Heating)			-	-	-	4.35/3.70	4.15/3.55	4.00/3.40	-	
Comp output(W)						2.50k	2.50k	2.50k		
Network Impedance(ΩMAX.)			-			-			-	
Fan motor output (Indoor/Outdoor) W			111			120			-	
Moisture removal volume		L/h(Pt/h)	6.0		(12.6)	-			-	
External static pressure		Pa	-			-			-	
Indoor Air flow	Cooling	m³/min (ft³/min)	30.0/25.0/23.0 (1059)/(883)/(812)			-			-	-
Indoor Air flow	Heating	m³/min (ft³/min)	30.0/25.0/23.0 (1059)/(883)/(812)			-			-	-
Outdoor Air flow	Cooling	m³/min (ft³/min)	-			76.0 (2683)			-	-
Outdoor Air flow	Heating	m³/min (ft³/min)	-			70.0 (2472)			-	-
Refrigerant type / amount g(oz)			-			R32	2.60k	(91.7)	-	
Product dimension		Height mm(inch)	235 (9-1/4)			996 (39- 7/32)			-	
		Width mm(inch)	1590 (62-19/32)			980 (38-37/64)			-	
		Depth mm(inch)	690 (27-5/32)			370 (14- 9/16)			-	
Product dimension (Panel)		H×W×D mm, inch	-			-			-	
Packing dimension		Height mm(inch)	360 (14-11/64)			1134 (44-41/64)			-	
		Width mm(inch)	1655 (65-5/32)			1095 (43-7/64)			-	
		Depth mm(inch)	820 (32-9/32)			529 (20-53/64)			-	
Weight		(NET) kg(lb)	40 (88)			90 (199)			-	
		(GROSS) kg(lb)	49 (108)			98 (216)			-	
		Panel (NET) kg(lb)	-			-			-	
Layers limit (actually)			9 (10)			2 (3)			-	
Operation condition		Cool (DBT)	18°C ~ 32°C			-10°C ~ 43°C			-	
		Heat (DBT)	16°C ~ 30°C			-15°C ~ 24°C			-	
MAX WORKING PRESSURE HP/LP MPa (bar)			4.15/2.55 (41.5/25.5)						-	
PIPING	Pipe diameter mm (inch)		(Liquid)Ø9.52(3/8) (Gas)Ø15.88(5/8)			(Liquid)Ø9.52(3/8) (Gas)Ø15.88(5/8)			-	
	Connecting method, Standard length m(ft)		flared type, 5.0(16.4)			flared type, 5.0(16.4)			-	
	Pipe length range m (ft)		5 ~ 50m (16.4 ~ 164.0)						-	
	Indoor unit & Outdoor unit height difference m (ft)		15m(OD located lower)/30m(OD located higher) (49.2/98.4)						-	
	Add gas amount g/m (oz/ft)		45g/m (0.484)						-	
	Pipe length for additional gas m (ft)		30m (98.4)						-	

*1 In case it is necessary to indicate the air flow volume in (l/s), the value in (m³/min.) shall be multiplied by 16.7 and rounded down the decimal point.
*2 If the EUROVENT Certified models can be operated under the "extra-low"temperature condition, -7°C dry bulb and -8°C wet-bulb temperatures with rated voltage 230V shall be used.
*3 Network Impedance shall be applicable for EUROPE and CHINA models.
*4 The annual consumption is calculated by multiplying the input power at 230V(400V) by an average of 500 hours per year in cooling mode.
*5 EER and COP classification is at 230V(400V) only in accordance with EU directive 2002/31/EC.
*6 SEER and SCOP classification is at 230V(400V) only in accordance with EN-14825. For heating, SCOP indicates the value of only Average heating season, Other fiche data indicates in an attached sheet

Single -Type

1-1. Unit Specifications

PZ2

2. Ceiling Type S-125PT2E5B / U-125PZ2E8

INDOOR		MODEL	S-125PT2E5B			-			-	
PANEL		MODEL	-			-			-	
OUTDOOR		MODEL	-			U-125PZ2E8			-	
Branch pipe		MODEL	-							
Performance test condition			ISO5151 / EN14511 / EN12102 / EN14825							
Power supply		Ø, Hz	1Ø 50Hz			3Ø 50Hz				
		V	220V	230V	240V	380V	400V	415V	Min	Max
COOLING	Capacity	kW	12.5	12.5	12.5	-	-	-	3.2	13.5
		BTU/h	42700	42700	42700	-	-	-	10900	46100
	Current	A	0.89	0.86	0.83	5.90	5.60	5.40	-	-
	Input power	W	110	110	110	3.650k	3.650k	3.650k	-	-
		TOTAL W	-			3.760k	3.760k	3.760k	600	4.880k
	Annual consumption	TOTAL kWh *4	-			-	1880	-	-	-
	EER/EER CLASS	TOTAL (W/W) *5/ ("A"~"G")	-	-	-	3.32	3.32/A	3.32	5.33	2.77
	Erp *6 Pdesign	kW	-	-	-	-	12.5	-	-	-
	Erp *6 $\eta_{s,c}$	%	-	-	-	-	227.1	-	-	-
	Erp *6 Annual consumption	kWh	-	-	-	-	-	-	-	-
	Erp *6 Class		-	-	-	-	-	-	-	-
	Power factor	%	-	-	-	94	94	94	-	-
	Noise indoor	dB-A (H/M/L)	46/40/36			-			-	-
		Power Level dB	64/58/54			-			-	-
	Noise outdoor	dB-A (H/L)	-			55/-			-	-
		Power Level dB	-			73/-			-	-
HEATING	Capacity	kW	12.5	12.5	12.5	-	-	-	3.3	15.0
		BTU/h	42700	42700	42700	-	-	-	11300	51200
	Current	A	0.89	0.86	0.83	5.00	4.75	4.60	-	-
	Input power	W	110	110	110	3.100k	3.100k	3.100k	-	-
		TOTAL W	-			3.210k	3.210k	3.210k	730	4.400k
	COP/COP CLASS	TOTAL (W/W) *5/ ("A"~"G")	-	-	-	3.89	3.89/A	3.89	4.52	3.41
	Erp *6 Pdesign at -10°C	kW	-	-	-	-	12.5	-	-	-
	Erp *6 Tbivalent	°C	-	-	-	-	-7	-	-	-
	Erp *6 $\eta_{s,h}$	%	-	-	-	-	146.9	-	-	-
	Erp *6 Annual consumption	kWh	-	-	-	-	-	-	-	-
	Erp *6 elbu(-10°C)	kW	-	-	-	-	2.70	-	-	-
	Erp *6 Class		-	-	-	-	-	-	-	-
	Power factor	%	-	-	-	94	94	94	-	-
	Noise indoor	dB-A (H/M/L)	46/40/36			-			-	-
		Power Level dB	64/58/54						-	-
	Noise outdoor	dB-A (H/L)	-			55/-			-	-
		Power Level dB	-			73/-			-	-
EXTRA LOW TEMP	Total capacity(kW) / Input power(W) / COP		-						-	
Max Current(A) / Max Input power(W)			0.89/110	0.86/110	0.83/110	10.0/6.20k	10.0/6.50k	10.0/6.75k	-	
Starting current(A) (Cooling/Heating)			-	-	-	5.90/5.00	5.60/4.75	5.40/4.60	-	
Comp output(W)			-			2.80k	2.80k	2.80k		
Network Impedance(ΩMAX.)			-			-			-	
Fan motor output (Indoor/Outdoor) W			111			120			-	
Moisture removal volume		L/h(Pt/h)	7.9		(16.6)	-			-	
External static pressure		Pa	-			-			-	
Indoor Air flow	Cooling	m³/min (ft³/min)	34.0/28.0/24.0 (1201)/(989)/(848)			-			-	-
Indoor Air flow	Heating	m³/min (ft³/min)	34.0/28.0/24.0 (1201)/(989)/(848)			-			-	-
Outdoor Air flow	Cooling	m³/min (ft³/min)	-			86.0 (3037)			-	-
Outdoor Air flow	Heating	m³/min (ft³/min)	-			78.0 (2754)			-	-
Refrigerant type / amount g(oz)			-			R32	2.98k	(105.1)	-	
Product dimension		Height mm(inch)	235 (9-1/4)			996 (39- 7/32)			-	
		Width mm(inch)	1590 (62-19/32)			980 (38-37/64)			-	
		Depth mm(inch)	690 (27-5/32)			370 (14- 9/16)			-	
Product dimension (Panel)		H×W×D mm, inch	-			-			-	
Packing dimension		Height mm(inch)	360 (14-11/64)			1134 (44-41/64)			-	
		Width mm(inch)	1655 (65-5/32)			1095 (43-7/64)			-	
		Depth mm(inch)	820 (32-9/32)			529 (20-53/64)			-	
Weight		(NET) kg(lb)	40 (88)			94 (207)			-	
		(GROSS) kg(lb)	49 (108)			102 (224)			-	
		Panel (NET) kg(lb)	-			-			-	
Layers limit (actually)			9 (10)			2 (3)			-	
Operation condition		Cool (DBT)	18°C ~ 32°C			-10°C ~ 43°C			-	
		Heat (DBT)	16°C ~ 30°C			-15°C ~ 24°C			-	
MAX WORKING PRESSURE HP/LP MPa (bar)			4.15/2.55 (41.5/25.5)							
PIPING	Pipe diameter mm (inch)		(Liquid)Ø9.52(3/8) (Gas)Ø15.88(5/8)			(Liquid)Ø9.52(3/8) (Gas)Ø15.88(5/8)			-	
	Connecting method, Standard length m(ft)		flared type, 5.0(16.4)			flared type, 5.0(16.4)			-	
	Pipe length range m (ft)		5 ~ 50m (16.4 ~ 164.0)						-	
	Indoor unit & Outdoor unit height difference m (ft)		15m(OD located lower)/30m(OD located higher) (49.2/98.4)						-	
	Add gas amount g/m (oz/ft)		45g/m (0.484)						-	
	Pipe length for additional gas m (ft)		30m (98.4)						-	

*1 In case it is necessary to indicate the air flow volume in (l/s), the value in (m³/min.) shall be multiplied by 16.7 and rounded down the decimal point.
*2 If the EUROVENT Certified models can be operated under the "extra-low"temperature condition, -7°C dry bulb and -8°C wet-bulb temperatures with rated voltage 230V shall be used.
*3 Network Impedance shall be applicable for EUROPE and CHINA models.
*4 The annual consumption is calculated by multiplying the input power at 230V(400V) by an average of 500 hours per year in cooling mode.
*5 EER and COP classification is at 230V(400V) only in accordance with EU directive 2002/31/EC.
*6 $\eta_{s,c}$ and $\eta_{s,h}$ classification is at 230V(400V) only in accordance with EN-14825. For heating, $\eta_{s,h}$ indicates the value of only Average heating season.

Single -Type

1-1. Unit Specifications

PZ2

2. Ceiling Type S-140PT2E5B / U-140PZ2E8

INDOOR		MODEL	S-140PT2E5B			-			-	
PANEL		MODEL	-			-			-	
OUTDOOR		MODEL	-			U-140PZ2E8			-	
Branch pipe		MODEL	-							
Performance test condition			ISO5151 / EN14511 / EN12102 / EN14825							
Power supply		Ø, Hz	1Ø 50Hz			3Ø 50Hz				
		V	220V	230V	240V	380V	400V	415V	Min	Max
COOLING	Capacity	kW	14.0	14.0	14.0	-	-	-	3.3	15.0
		BTU/h	47800	47800	47800	-	-	-	11300	51200
	Current	A	0.94	0.91	0.88	7.40	7.05	6.80	-	-
	Input power	W	120	120	120	4.580k	4.580k	4.580k	-	-
		TOTAL W	-			4.700k	4.700k	4.700k	620	5.500k
	Annual consumption	TOTAL kWh *4	-			-	2350	-	-	-
	EER/EER CLASS	TOTAL (W/W) *5/ ("A"~"G")	-	-	-	2.98	2.98/C	2.98	5.32	2.73
	Erp *6 Pdesign	kW	-	-	-	-	14.0	-	-	-
	Erp *6 $\eta_{s,c}$	%	-	-	-	-	216	-	-	-
	Erp *6 Annual consumption	kWh	-	-	-	-	-	-	-	-
	Erp *6 Class		-	-	-	-	-	-	-	-
	Power factor	%	-	-	-	94	94	94	-	-
	Noise indoor	dB-A (H/M/L)	47/41/37			-			-	-
		Power Level dB	65/59/55			-			-	-
	Noise outdoor	dB-A (H/L)	-			56/-			-	-
		Power Level dB	-			74/-			-	-
HEATING	Capacity	kW	14.0	14.0	14.0	-	-	-	3.4	16.0
		BTU/h	47800	47800	47800	-	-	-	11600	54600
	Current	A	0.94	0.91	0.88	5.90	5.60	5.40	-	-
	Input power	W	120	120	120	3.660k	3.660k	3.660k	-	-
		TOTAL W	-			3.780k	3.780k	3.780k	620	5.200k
	COP/COP CLASS	TOTAL (W/W) *5/ ("A"~"G")	-	-	-	3.70	3.70/A	3.70	5.48	3.08
	Erp *6 Pdesign at -10°C	kW	-	-	-	-	13.6	-	-	-
	Erp *6 Tbivalent	°C	-	-	-	-	-7	-	-	-
	Erp *6 $\eta_{s,h}$	%	-	-	-	-	144.8	-	-	-
	Erp *6 Annual consumption	kWh	-	-	-	-	-	-	-	-
	Erp *6 elbu(-10°C)	kW	-	-	-	-	3.00	-	-	-
	Erp *6 Class		-	-	-	-	-	-	-	-
	Power factor	%	-	-	-	94	94	94	-	-
	Noise indoor	dB-A (H/M/L)	47/41/37			-			-	-
		Power Level dB	65/59/55						-	-
	Noise outdoor	dB-A (H/L)	-			56/-			-	-
		Power Level dB	-			74/-			-	-
EXTRA LOW TEMP	Total capacity(kW) / Input power(W) / COP		-						-	
Max Current(A) / Max Input power(W)			0.94/120	0.91/120	0.88/120	10.5/6.50k	10.5/6.85k	10.5/7.10k	-	
Starting current(A) (Cooling/Heating)			-	-	-	7.40/5.90	7.05/5.60	6.80/5.40	-	
Comp output(W)			-			3.00k	3.00k	3.00k		
Network Impedance(ΩMAX.)			-			-			-	
Fan motor output (Indoor/Outdoor) W			111			120			-	
Moisture removal volume		L/h(Pt/h)	9.0		(18.9)	-			-	
External static pressure		Pa	-			-			-	
Indoor Air flow	Cooling	m³/min (ft³/min)	35.0/29.0/25.0 (1236)/(1024)/(883)			-			-	-
	Heating	m³/min (ft³/min)	35.0/29.0/25.0 (1236)/(1024)/(883)			-			-	-
Outdoor Air flow	Cooling	m³/min (ft³/min)	-			89.0 (3143)			-	-
	Heating	m³/min (ft³/min)	-			83.0 (2931)			-	-
Refrigerant type / amount g(oz)			-			R32 2.98k (105.1)			-	
Product dimension		Height mm(inch)	235 (9-1/4)			996 (39- 7/32)			-	
		Width mm(inch)	1590 (62-19/32)			980 (38-37/64)			-	
		Depth mm(inch)	690 (27-5/32)			370 (14- 9/16)			-	
Product dimension (Panel)		H×W×D mm, inch	-			-			-	
Packing dimension		Height mm(inch)	360 (14-11/64)			1134 (44-41/64)			-	
		Width mm(inch)	1655 (65-5/32)			1095 (43-7/64)			-	
		Depth mm(inch)	820 (32-9/32)			529 (20-53/64)			-	
Weight		(NET) kg(lb)	40 (88)			94 (207)			-	
		(GROSS) kg(lb)	49 (108)			102 (224)			-	
		Panel (NET) kg(lb)	-			-			-	
Layers limit (actually)			9 (10)			2 (3)			-	
Operation condition		Cool (DBT)	18°C ~ 32°C			-10°C ~ 43°C			-	
		Heat (DBT)	16°C ~ 30°C			-15°C ~ 24°C			-	
MAX WORKING PRESSURE HP/LP MPa (bar)			4.15/2.55 (41.5/25.5)							
PIPING	Pipe diameter mm (inch)		(Liquid)Ø9.52(3/8) (Gas)Ø15.88(5/8)			(Liquid)Ø9.52(3/8) (Gas)Ø15.88(5/8)			-	
	Connecting method, Standard length m(ft)		flared type, 5.0(16.4)			flared type, 5.0(16.4)			-	
	Pipe length range m (ft)		5 ~ 50m (16.4 ~ 164.0)						-	
	Indoor unit & Outdoor unit height difference m (ft)		15m(OD located lower)/30m(OD located higher) (49.2/98.4)						-	
	Add gas amount g/m (oz/ft)		45g/m (0.484)						-	
	Pipe length for additional gas m (ft)		30m (98.4)						-	

*1 In case it is necessary to indicate the air flow volume in (l/s), the value in (m³/min.) shall be multiplied by 16.7 and rounded down the decimal point.
*2 If the EUROVENT Certified models can be operated under the "extra-low"temperature condition, -7°C dry bulb and -8°C wet-bulb temperatures with rated voltage 230V shall be used.
*3 Network Impedance shall be applicable for EUROPE and CHINA models.
*4 The annual consumption is calculated by multiplying the input power at 230V(400V) by an average of 500 hours per year in cooling mode.
*5 EER and COP classification is at 230V(400V) only in accordance with EU directive 2002/31/EC.
*6 $\eta_{s,c}$ and $\eta_{s,h}$ classification is at 230V(400V) only in accordance with EN-14825. For heating, $\eta_{s,h}$ indicates the value of only Average heating season.

Simultaneous (Twin) -Type

1-1. Unit Specifications

PZ2

3. Wall Mounted Type S-50PK2E5B×2 / U-100PZ2E5

INDOOR		MODEL	S-50PK2E5B ×2			-			-	
PANEL		MODEL	-			-			-	
OUTDOOR		MODEL	-			U-100PZ2E5			-	
Branch pipe		MODEL	CZ-P155BK1							
Performance test condition			ISO5151 / EN14511 / EN12102/ EN14825							
Power supply		Ø, Hz	1Ø 50Hz			1Ø 50Hz				
		V	220V	230V	240V	220V	230V	240V	Min	Max
COOLING	Capacity	kW	10.0	10.0	10.0	-	-	-	3.0	11.0
		BTU/h	34100	34100	34100	-	-	-	10200	37500
	Current	A	0.40×2	0.39×2	0.38×2	13.5	12.9	12.3	-	-
	Input power	W	35×2	35×2	35×2	2.810k	2.810k	2.810k	-	-
		TOTAL W	-			2.880k	2.880k	2.880k	560	4.000k
	Annual consumption	TOTAL kWh *4	-			-	1440	-	-	-
	EER/EER CLASS	TOTAL (W/W) *5/ ("A"~"G")	-	-	-	3.47	3.47/A	3.47	5.36	2.75
	Erp *6 Pdesign	kW	-	-	-	-	10.0	-	-	-
	Erp *6 SEER	(W/W)	-	-	-	-	6.4	-	-	-
	Erp *6 Annual consumption	kWh	-	-	-	-	547	-	-	-
	Erp *6 Class		-	-	-	-	A++	-	-	-
	Power factor	%	-	-	-	95	95	95	-	-
	Noise indoor	dB-A (H/M/L) *7	40×2 / 36×2 / 32×2			-			-	-
		Power Level dB	56×2 / 52×2 / 48×2			-			-	-
	Noise outdoor	dB-A (H/L)	-			52/-			-	-
		Power Level dB	-			70/-			-	-
HEATING	Capacity	kW	10.0	10.0	10.0	-	-	-	3.0	12.4
		BTU/h	34100	34100	34100	-	-	-	10200	42300
	Current	A	0.40×2	0.39×2	0.38×2	11.8	11.3	10.9	-	-
	Input power	W	35×2	35×2	35×2	2.470k	2.470k	2.470k	-	-
		TOTAL W	-			2.540k	2.540k	2.540k	560	3.900k
	COP/COP CLASS	TOTAL (W/W) *5/ ("A"~"G")	-	-	-	3.94	3.94/A	3.94	5.36	3.18
	Erp *6 Pdesign at -10°C	kW	-	-	-	-	10.0	-	-	-
	Erp *6 Tbivalent	°C	-	-	-	-	-7	-	-	-
	Erp *6 SCOP	(W/W)	-	-	-	-	3.9	-	-	-
	Erp *6 Annual consumption	kWh	-	-	-	-	3590	-	-	-
	Erp *6 elbu(-10°C)	kW	-	-	-	-	1.69	-	-	-
	Erp *6 Class		-	-	-	-	A	-	-	-
	Power factor	%	-	-	-	95	95	95	-	-
	Noise indoor	dB-A (H/M/L) *7	40×2 / 36×2 / 32×2			-			-	-
		Power Level dB	56×2 / 52×2 / 48×2			-			-	-
	Noise outdoor	dB-A (H/L)	-			52/-			-	-
		Power Level dB	-			70/-			-	-
EXTRA LOW TEMP	Total capacity(kW) / Input power(W) / COP		-						-	
Max Current(A) / Max Input power(W)			0.40×2/35×2	0.39×2/35×2	0.38×2/35×2	25.0/5.25k	25.0/5.50k	25.0/5.70k	-	
Starting current(A) (Cooling/Heating)			-	-	-	13.5/11.8	12.9/11.3	12.3/10.9	-	
Comp output(W)						2.50k	2.50k	2.50k		
Network Impedance(ΩMAX.)			-			-			-	
Fan motor output (Indoor/Outdoor) W			54			120			-	
Moisture removal volume		L/h(Pt/h)	3.6	(1.8×2)	(7.6)	-			-	
External static pressure		Pa	-			-			-	
Indoor Air flow *7	Cooling	m³/min (ft³/min)	16.0×2/13.5×2/11.0×2 (565×2)/(477×2)/(388×2)			-			-	-
	Heating	m³/min (ft³/min)	16.0×2/13.5×2/11.0×2 (565×2)/(477×2)/(388×2)			-			-	-
Outdoor Air flow	Cooling	m³/min (ft³/min)	-			76.0 (2683)			-	-
	Heating	m³/min (ft³/min)	-			70.0 (2472)			-	-
Refrigerant type / amount g(oz)			-			R32	2.60k	(91.7)	-	
Product dimension		Height mm(inch)	302 (11-29/32)			996 (39- 7/32)			-	
		Width mm(inch)	1120 (44-3/32)			980 (38-37/64)			-	
		Depth mm(inch)	236 (9-9/32)			370 (14- 9/16)			-	
Product dimension (Panel)		H×W×D mm, inch	-			-			-	
Packing dimension		Height mm(inch)	282 (11-1/8)			1134 (44-41/64)			-	
		Width mm(inch)	1190 (46-7/8)			1095 (43-7/64)			-	
		Depth mm(inch)	378 (14-29/32)			529 (20-53/64)			-	
Weight		(NET) kg(lb)	13 (29)			90 (199)			-	
		(GROSS) kg(lb)	16 (36)			98 (216)			-	
		Panel (NET) kg(lb)	-			-			-	
Layers limit (actually)			11(12)			2 (3)			-	
Operation condition		Cool (DBT)	18°C ~ 32°C			-10°C ~ 43°C			-	
		Heat (DBT)	16°C ~ 30°C			-15°C ~ 24°C			-	
MAX WORKING PRESSURE HP/LP MPa (bar)			4.15/2.55 (41.5/25.5)						-	
PIPING	Pipe diameter mm (inch)		(Liquid)Ø6.35(1/4) (Gas)Ø12.7(1/2)			(Liquid)Ø9.52(3/8) (Gas)Ø15.88(5/8)			-	
	Connecting method, Standard length m(ft)		flared type, 5.0(16.4)			flared type, 5.0(16.4)			-	
	Pipe length range m (ft)		5 ~ 50m (16.4 ~ 164.0)						-	
	Indoor unit & Outdoor unit height difference m (ft)		15m(OD located lower)/30m(OD located higher) (49.2/98.4)						-	
	Add gas amount g/m (oz/ft)		45g/m (0.484)						-	
	Pipe length for additional gas m (ft)		30m (98.4)						-	

*1 In case it is necessary to indicate the air flow volume in (l/s), the value in (m³/min.) shall be multiplied by 16.7 and rounded down the decimal point.
*2 If the EUROVENT Certified models can be operated under the "extra-low"temperature condition, -7°C dry bulb and -8°C wet-bulb temperatures with rated voltage 230V shall be used.
*3 Network Impedance shall be applicable for EUROPE and CHINA models.
*4 The annual consumption is calculated by multiplying the input power at 230V(400V) by an average of 500 hours per year in cooling mode.
*5 EER and COP classification is at 230V(400V) only in accordance with EU directive 2002/31/EC.
*6 SEER and SCOP classification is at 230V(400V) only in accordance with EN-14825. For heating, SCOP indicates the value of only Average heating season, Other fiche data indicates in an attached sheet
*7 H: High at setting 5 stage (Level 5), M: Middle at setting 5 stage (Level 3), L: Low at setting 5 stage (Level 1)

Simultaneous (Twin) -Type

1-1. Unit Specifications

PZ2

3. Wall Mounted Type S-60PK2E5B×2 / U-125PZ2E5

INDOOR		MODEL	S-60PK2E5B ×2			-			-	
PANEL		MODEL	-			-			-	
OUTDOOR		MODEL	-			U-125PZ2E5			-	
Branch pipe		MODEL	CZ-P155BK1							
Performance test condition			ISO5151 / EN14511 / EN12102/ EN14825							
Power supply		Ø, Hz	1Ø 50Hz			1Ø 50Hz				
		V	220V	230V	240V	220V	230V	240V	Min	Max
COOLING	Capacity	kW	12.5	12.5	12.5	-	-	-	3.2	13.2
		BTU/h	42700	42700	42700	-	-	-	10900	45000
	Current	A	0.60×2	0.59×2	0.58×2	18.3	17.5	16.8	-	-
	Input power	W	60×2	60×2	60×2	3.780k	3.780k	3.780k	-	-
		TOTAL W	-			3.900k	3.900k	3.900k	600	4.800k
	Annual consumption	TOTAL kWh *4	-			-	1950	-	-	-
	EER/EER CLASS	TOTAL (W/W) *5/ ("A"~"G")	-	-	-	3.21	3.21/A	3.21	5.33	2.75
	Erp *6 Pdesign	kW	-	-	-	-	12.5	-	-	-
	Erp *6 $\eta_{s,c}$	%	-	-	-	-	237	-	-	-
	Erp *6 Annual consumption	kWh	-	-	-	-	-	-	-	-
	Erp *6 Class		-	-	-	-	-	-	-	-
	Power factor	%	-	-	-	94	94	94	-	-
	Noise indoor	dB-A (H/M/L) *7	47×2/44×2/40×2			-			-	-
		Power Level dB	63×2/60×2/56×2			-			-	-
	Noise outdoor	dB-A (H/L)	-			55/-			-	-
		Power Level dB	-			73/-			-	-
HEATING	Capacity	kW	12.5	12.5	12.5	-	-	-	3.3	15.0
		BTU/h	42700	42700	42700	-	-	-	11300	51200
	Current	A	0.60×2	0.59×2	0.58×2	15.7	15.0	14.4	-	-
	Input power	W	60×2	60×2	60×2	3.240k	3.240k	3.240k	-	-
		TOTAL W	-			3.360k	3.360k	3.360k	600	4.600k
	COP/COP CLASS	TOTAL (W/W) *5/ ("A"~"G")	-	-	-	3.72	3.72/A	3.72	5.50	3.26
	Erp *6 Pdesign at -10°C	kW	-	-	-	-	12.5	-	-	-
	Erp *6 Tbivalent	°C	-	-	-	-	-7	-	-	-
	Erp *6 $\eta_{s,h}$	%	-	-	-	-	139.7	-	-	-
	Erp *6 Annual consumption	kWh	-	-	-	-	-	-	-	-
	Erp *6 elbu(-10°C)	kW	-	-	-	-	2.40	-	-	-
	Erp *6 Class		-	-	-	-	-	-	-	-
	Power factor	%	-	-	-	94	94	94	-	-
	Noise indoor	dB-A (H/M/L) *7	47×2/44×2/40×2			-			-	-
		Power Level dB	63×2/60×2/56×2						-	-
	Noise outdoor	dB-A (H/L)	-			55/-			-	-
		Power Level dB	-			73/-			-	-
EXTRA LOW TEMP	Total capacity(kW) / Input power(W) / COP		-						-	
Max Current(A) / Max Input power(W)			0.60×2/60×2	0.59×2/60×2	0.58×2/60×2	29.0/6.00k	29.0/6.30k	29.0/6.60k	-	
Starting current(A) (Cooling/Heating)			-	-	-	18.3/15.7	17.5/15.0	16.8/14.4	-	
Comp output(W)			-			2.80k	2.80k	2.80k		
Network Impedance(ΩMAX.)			-			-			-	
Fan motor output (Indoor/Outdoor) W			54			120			-	
Moisture removal volume		L/h(Pt/h)	4.0	(2.0×2)	(8.4)	-			-	
External static pressure		Pa	-			-			-	
Indoor Air flow *7	Cooling	m³/min (ft³/min)	20.0×2/17.5×2/14.5×2 (706×2)/(618×2)/(512×2)			-			-	-
	Heating	m³/min (ft³/min)	20.0×2/17.5×2/14.5×2 (706×2)/(618×2)/(512×2)			-			-	-
Outdoor Air flow	Cooling	m³/min (ft³/min)	-			86.0 (3037)			-	-
	Heating	m³/min (ft³/min)	-			78.0 (2754)			-	-
Refrigerant type / amount g(oz)			-			R32	2.98k	(105.1)	-	
Product dimension		Height mm(inch)	302 (11-29/32)			996 (39- 7/32)			-	
		Width mm(inch)	1120 (44-3/32)			980 (38-37/64)			-	
		Depth mm(inch)	236 (9-9/32)			370 (14- 9/16)			-	
Product dimension (Panel)		H×W×D mm, inch	-			-			-	
Packing dimension		Height mm(inch)	282 (11-1/8)			1134 (44-41/64)			-	
		Width mm(inch)	1190 (46-7/8)			1095 (43-7/64)			-	
		Depth mm(inch)	378 (14-29/32)			529 (20-53/64)			-	
Weight		(NET) kg(lb)	14 (31)			94 (207)			-	
		(GROSS) kg(lb)	17 (38)			102 (224)			-	
		Panel (NET) kg(lb)	-			-			-	
Layers limit (actually)			11(12)			2 (3)			-	
Operation condition		Cool (DBT)	18°C ~ 32°C			-10°C ~ 43°C			-	
		Heat (DBT)	16°C ~ 30°C			-15°C ~ 24°C			-	
MAX WORKING PRESSURE HP/LP MPa (bar)			4.15/2.55 (41.5/25.5)						-	
PIPING	Pipe diameter mm (inch)		(Liquid)Ø9.52(3/8) (Gas)Ø15.88(5/8)			(Liquid)Ø9.52(3/8) (Gas)Ø15.88(5/8)			-	
	Connecting method, Standard length m(ft)		flared type, 5.0(16.4)			flared type, 5.0(16.4)			-	
	Pipe length range m (ft)		5 ~ 50m (16.4 ~ 164.0)						-	
	Indoor unit & Outdoor unit height difference m (ft)		15m(OD located lower)/30m(OD located higher) (49.2/98.4)						-	
	Add gas amount g/m (oz/ft)		45g/m (0.484)						-	
	Pipe length for additional gas m (ft)		30m (98.4)						-	

*1 In case it is necessary to indicate the air flow volume in (l/s), the value in (m³/min.) shall be multiplied by 16.7 and rounded down the decimal point.
*2 If the EUROVENT Certified models can be operated under the "extra-low"temperature condition, -7°C dry bulb and -8°C wet-bulb temperatures with rated voltage 230V shall be used.
*3 Network Impedance shall be applicable for EUROPE and CHINA models.
*4 The annual consumption is calculated by multiplying the input power at 230V(400V) by an average of 500 hours per year in cooling mode.
*5 EER and COP classification is at 230V(400V) only in accordance with EU directive 2002/31/EC.
*6 $\eta_{s,c}$ and $\eta_{s,h}$ classification is at 230V(400V) only in accordance with EN-14825. For heating, $\eta_{s,h}$ indicates the value of only Average heating season.
*7 H: High at setting 5 stage (Level 5), M: Middle at setting 5 stage (Level 3), L: Low at setting 5 stage (Level 1)

Simultaneous (Twin) -Type

1-1. Unit Specifications

PZ2

3. Wall Mounted Type S-71PK2E5B×2 / U-140PZ2E5

INDOOR		MODEL	S-71PK2E5B ×2			-			-	
PANEL		MODEL	-			-			-	
OUTDOOR		MODEL	-			U-140PZ2E5			-	
Branch pipe		MODEL	CZ-P155BK1							
Performance test condition			ISO5151 / EN14511 / EN12102/ EN14825							
Power supply		Ø, Hz	1Ø 50Hz			1Ø 50Hz				
		V	220V	230V	240V	220V	230V	240V	Min	Max
COOLING	Capacity	kW	14.0	14.0	14.0	-	-	-	3.3	15.0
		BTU/h	47800	47800	47800	-	-	-	11300	51200
	Current	A	0.60×2	0.59×2	0.58×2	22.8	21.9	20.9	-	-
	Input power	W	60×2	60×2	60×2	4.720k	4.720k	4.720k	-	-
		TOTAL W	-			4.840k	4.840k	4.840k	620	5.600k
	Annual consumption	TOTAL kWh *4	-			-	2420	-	-	-
	EER/EER CLASS	TOTAL (W/W) *5/ ("A"~"G")	-	-	-	2.89	2.89/C	2.89	5.32	2.68
	Erp *6 Pdesign	kW	-	-	-	-	14.0	-	-	-
	Erp *6 $\eta_{s.c}$	%	-	-	-	-	228.6	-	-	-
	Erp *6 Annual consumption	kWh	-	-	-	-	-	-	-	-
	Erp *6 Class		-	-	-	-	-	-	-	-
	Power factor	%	-	-	-	94	94	94	-	-
	Noise indoor	dB-A (H/M/L) *7	47×2/44×2/40×2			-			-	-
		Power Level dB	63×2/60×2/56×2			-			-	-
	Noise outdoor	dB-A (H/L)	-			56/-			-	-
		Power Level dB	-			74/-			-	-
HEATING	Capacity	kW	14.0	14.0	14.0	-	-	-	3.4	16.0
		BTU/h	47800	47800	47800	-	-	-	11600	54600
	Current	A	0.60×2	0.59×2	0.58×2	18.5	17.7	17.0	-	-
	Input power	W	60×2	60×2	60×2	3.830k	3.830k	3.830k	-	-
		TOTAL W	-			3.950k	3.950k	3.950k	620	5.000k
	COP/COP CLASS	TOTAL (W/W) *5/ ("A"~"G")	-	-	-	3.54	3.54/B	3.54	5.48	3.20
	Erp *6 Pdesign at -10°C	kW	-	-	-	-	13.6	-	-	-
	Erp *6 Tbivalent	°C	-	-	-	-	-7	-	-	-
	Erp *6 $\eta_{s.h}$	%	-	-	-	-	137.7	-	-	-
	Erp *6 Annual consumption	kWh	-	-	-	-	-	-	-	-
	Erp *6 elbu(-10°C)	kW	-	-	-	-	2.80	-	-	-
	Erp *6 Class		-	-	-	-	-	-	-	-
	Power factor	%	-	-	-	94	94	94	-	-
	Noise indoor	dB-A (H/M/L) *7	47×2/44×2/40×2			-			-	-
		Power Level dB	63×2/60×2/56×2						-	-
	Noise outdoor	dB-A (H/L)	-			56/-			-	-
		Power Level dB	-			74/-			-	-
EXTRA LOW TEMP	Total capacity(kW) / Input power(W) / COP		-						-	
Max Current(A) / Max Input power(W)			0.60×2/60×2	0.59×2/60×2	0.58×2/60×2	30.0/6.25k	30.0/6.50k	30.0/6.80k	-	
Starting current(A) (Cooling/Heating)			-	-	-	22.8/18.5	21.9/17.7	20.9/17.0	-	
Comp output(W)			-			3.00k	3.00k	3.00k		
Network Impedance(ΩMAX.)			-			-			-	
Fan motor output (Indoor/Outdoor) W			54			120			-	
Moisture removal volume		L/h(Pt/h)	6.0	(3.0×2)	(12.6)	-			-	
External static pressure		Pa	-			-			-	
Indoor Air flow *7	Cooling	m³/min (ft³/min)	20.0×2/17.5×2/14.5×2 (706×2)/(618×2)/(512×2)			-			-	-
	Heating	m³/min (ft³/min)	20.0×2/17.5×2/14.5×2 (706×2)/(618×2)/(512×2)			-			-	-
Outdoor Air flow	Cooling	m³/min (ft³/min)	-			89.0 (3143)			-	-
	Heating	m³/min (ft³/min)	-			83.0 (2931)			-	-
Refrigerant type / amount g(oz)			-			R32	2.98k	(105.1)	-	
Product dimension		Height mm(inch)	302 (11-29/32)			996 (39- 7/32)			-	
		Width mm(inch)	1120 (44-3/32)			980 (38-37/64)			-	
		Depth mm(inch)	236 (9-9/32)			370 (14- 9/16)			-	
Product dimension (Panel)		H×W×D mm, inch	-			-			-	
Packing dimension		Height mm(inch)	282 (11-1/8)			1134 (44-41/64)			-	
		Width mm(inch)	1190 (46-7/8)			1095 (43-7/64)			-	
		Depth mm(inch)	378 (14-29/32)			529 (20-53/64)			-	
Weight		(NET) kg(lb)	14 (31)			94 (207)			-	
		(GROSS) kg(lb)	17 (38)			102 (224)			-	
		Panel (NET) kg(lb)	-			-			-	
Layers limit (actually)			11(12)			2 (3)			-	
Operation condition		Cool (DBT)	18°C ~ 32°C			-10°C ~ 43°C			-	
		Heat (DBT)	16°C ~ 30°C			-15°C ~ 24°C			-	
MAX WORKING PRESSURE HP/LP MPa (bar)			4.15/2.55 (41.5/25.5)						-	
PIPING	Pipe diameter mm (inch)		(Liquid)Ø9.52(3/8) (Gas)Ø15.88(5/8)			(Liquid)Ø9.52(3/8) (Gas)Ø15.88(5/8)			-	
	Connecting method, Standard length m(ft)		flared type, 5.0(16.4)			flared type, 5.0(16.4)			-	
	Pipe length range m (ft)		5 ~ 50m (16.4 ~ 164.0)						-	
	Indoor unit & Outdoor unit height difference m (ft)		15m(OD located lower)/30m(OD located higher) (49.2/98.4)						-	
	Add gas amount g/m (oz/ft)		45g/m (0.484)						-	
	Pipe length for additional gas m (ft)		30m (98.4)						-	

*1 In case it is necessary to indicate the air flow volume in (l/s), the value in (m³/min.) shall be multiplied by 16.7 and rounded down the decimal point.
*2 If the EUROVENT Certified models can be operated under the "extra-low"temperature condition, -7°C dry bulb and -8°C wet-bulb temperatures with rated voltage 230V shall be used.
*3 Network Impedance shall be applicable for EUROPE and CHINA models.
*4 The annual consumption is calculated by multiplying the input power at 230V(400V) by an average of 500 hours per year in cooling mode.
*5 EER and COP classification is at 230V(400V) only in accordance with EU directive 2002/31/EC.
*6 $\eta_{s.c}$ and $\eta_{s.h}$ classification is at 230V(400V) only in accordance with EN-14825. For heating, $\eta_{s.h}$ indicates the value of only Average heating season.
*7 H: High at setting 5 stage (Level 5), M: Middle at setting 5 stage (Level 3), L: Low at setting 5 stage (Level 1)

Single -Type

1-1. Unit Specifications

PZ2

3. Wall Mounted Type S-100PK2E5B / U-100PZ2E5

INDOOR		MODEL	S-100PK2E5B			-			-	
PANEL		MODEL	-			-			-	
OUTDOOR		MODEL	-			U-100PZ2E5			-	
Branch pipe		MODEL	-							
Performance test condition			ISO5151 / EN14511 / EN12102/ EN14825							
Power supply		Ø, Hz	1Ø 50Hz			1Ø 50Hz				
		V	220V	230V	240V	220V	230V	240V	Min	Max
COOLING	Capacity	kW	9.0	9.0	9.0	-	-	-	3.0	9.7
		BTU/h	30700	30700	30700	-	-	-	10200	33100
	Current	A	0.70	0.68	0.66	12.1	11.5	11.1	-	-
	Input power	W	75	75	75	2.515k	2.515k	2.515k	-	-
		TOTAL W	-			2.590k	2.590k	2.590k	560	3.100k
	Annual consumption	TOTAL kWh *4	-			-	1295	-	-	-
	EER/EER CLASS	TOTAL (W/W) *5/ ("A"~"G")	-	-	-	3.47	3.47/A	3.47	5.36	3.13
	Erp *6 Pdesign	kW	-	-	-	-	9.0	-	-	-
	Erp *6 SEER	(W/W)	-	-	-	-	6.5	-	-	-
	Erp *6 Annual consumption	kWh	-	-	-	-	485	-	-	-
	Erp *6 Class		-	-	-	-	A++	-	-	-
	Power factor	%	-	-	-	95	95	95	-	-
	Noise indoor	dB-A (H/M/L) *7	49/45/41			-			-	-
		Power Level dB	65/61/57			-			-	-
	Noise outdoor	dB-A (H/L)	-			52/-			-	-
		Power Level dB	-			70/-			-	-
HEATING	Capacity	kW	9.0	9.0	9.0	-	-	-	3.0	10.5
		BTU/h	30700	30700	30700	-	-	-	10200	35800
	Current	A	0.70	0.68	0.66	10.6	10.2	9.70	-	-
	Input power	W	75	75	75	2.215k	2.215k	2.215k	-	-
		TOTAL W	-			2.290k	2.290k	2.290k	560	2.950k
	COP/COP CLASS	TOTAL (W/W) *5/ ("A"~"G")	-	-	-	3.93	3.93 /A	3.93	5.36	3.56
	Erp *6 Pdesign at -10°C	kW	-	-	-	-	9.0	-	-	-
	Erp *6 Tbivalent	°C	-	-	-	-	-7	-	-	-
	Erp *6 SCOP	(W/W)	-	-	-	-	3.9	-	-	-
	Erp *6 Annual consumption	kWh	-	-	-	-	3231	-	-	-
	Erp *6 elbu(-10°C)	kW	-	-	-	-	1.25	-	-	-
	Erp *6 Class		-	-	-	-	A	-	-	-
	Power factor	%	-	-	-	95	95	95	-	-
	Noise indoor	dB-A (H/M/L) *7	49/45/41			-			-	-
		Power Level dB	65/61/57			-			-	-
	Noise outdoor	dB-A (H/L)	-			52/-			-	-
		Power Level dB	-			70/-			-	-
EXTRA LOW TEMP	Total capacity(kW) / Input power(W) / COP		-						-	
Max Current(A) / Max Input power(W)			0.70/75	0.68/75	0.66/75	25.0/5.25k	25.0/5.50k	25.0/5.70k	-	
Starting current(A) (Cooling/Heating)			-	-	-	12.1/10.6	11.5/10.2	11.1/9.70	-	
Comp output(W)						2.50k	2.50k	2.50k		
Network Impedance(ΩMAX.)			-			-			-	
Fan motor output (Indoor/Outdoor) W			54			120			-	
Moisture removal volume		L/h(Pt/h)	4.3		(9.0)	-			-	
External static pressure		Pa	-			-			-	
Indoor Air flow *7	Cooling	m³/min (ft³/min)	22.0 / 18.5 /15.0 (777) / (653) /(530)			-			-	-
Indoor Air flow *7	Heating	m³/min (ft³/min)	22.0 / 18.5 /15.0 (777) / (653) /(530)			-			-	-
Outdoor Air flow	Cooling	m³/min (ft³/min)	-			76.0 (2683)			-	-
Outdoor Air flow	Heating	m³/min (ft³/min)	-			70.0 (2472)			-	-
Refrigerant type / amount g(oz)			-			R32 2.60k (91.7)			-	
Product dimension		Height mm(inch)	302 (11-29/32)			996 (39- 7/32)			-	
		Width mm(inch)	1120 (44-3/32)			980 (38-37/64)			-	
		Depth mm(inch)	236 (9-9/32)			370 (14- 9/16)			-	
Product dimension (Panel)		H×W×D mm, inch	-			-			-	
Packing dimension		Height mm(inch)	282 (11-1/8)			1134 (44-41/64)			-	
		Width mm(inch)	1190 (46-7/8)			1095 (43-7/64)			-	
		Depth mm(inch)	378 (14-29/32)			529 (20-53/64)			-	
Weight		(NET) kg(lb)	14 (31)			90 (199)			-	
		(GROSS) kg(lb)	17 (38)			98 (216)			-	
		Panel (NET) kg(lb)	-			-			-	
Layers limit (actually)			11(12)			2 (3)			-	
Operation condition		Cool (DBT)	18°C ~ 32°C			-10°C ~ 43°C			-	
		Heat (DBT)	16°C ~ 30°C			-15°C ~ 24°C			-	
MAX WORKING PRESSURE HP/LP MPa (bar)			4.15/2.55 (41.5/25.5)						-	
PIPING	Pipe diameter mm (inch)		(Liquid)Ø9.52(3/8) (Gas)Ø15.88(5/8)			(Liquid)Ø9.52(3/8) (Gas)Ø15.88(5/8)			-	
PIPING	Connecting method, Standard length m(ft)		flared type, 5.0(16.4)			flared type, 5.0(16.4)			-	
PIPING	Pipe length range m (ft)		5 ~ 50m (16.4 ~ 164.0)						-	
PIPING	Indoor unit & Outdoor unit height difference m (ft)		15m(OD located lower)/30m(OD located higher) (49.2/98.4)						-	
PIPING	Add gas amount g/m (oz/ft)		45g/m (0.484)						-	
PIPING	Pipe length for additional gas m (ft)		30m (98.4)						-	

*1 In case it is necessary to indicate the air flow volume in (l/s), the value in (m³/min.) shall be multiplied by 16.7 and rounded down the decimal point.
*2 If the EUROVENT Certified models can be operated under the "extra-low"temperature condition, -7°C dry bulb and -8°C wet-bulb temperatures with rated voltage 230V shall be used.
*3 Network Impedance shall be applicable for EUROPE and CHINA models.
*4 The annual consumption is calculated by multiplying the input power at 230V(400V) by an average of 500 hours per year in cooling mode.
*5 EER and COP classification is at 230V(400V) only in accordance with EU directive 2002/31/EC.
*6 SEER and SCOP classification is at 230V(400V) only in accordance with EN-14825. For heating, SCOP indicates the value of only Average heating season, Other fiche data indicates in an attached sheet
*7 H: High at setting 5 stage (Level 5), M: Middle at setting 5 stage (Level 3), L: Low at setting 5 stage (Level 1)

Simultaneous (Twin) -Type

1-1. Unit Specifications

PZ2

3. Wall Mounted Type S-50PK2E5B×2 / U-100PZ2E8

INDOOR		MODEL	S-50PK2E5B ×2			-			-	
PANEL		MODEL	-			-			-	
OUTDOOR		MODEL	-			U-100PZ2E8			-	
Branch pipe		MODEL	CZ-P155BK1							
Performance test condition			ISO5151 / EN14511 / EN12102/ EN14825							
Power supply		Ø, Hz	1Ø 50Hz			3Ø 50Hz				
		V	220V	230V	240V	380V	400V	415V	Min	Max
COOLING	Capacity	kW	10.0	10.0	10.0	-	-	-	3.0	11.0
		BTU/h	34100	34100	34100	-	-	-	10200	37500
	Current	A	0.40×2	0.39×2	0.38×2	7.95	7.55	7.30	-	-
	Input power	W	35×2	35×2	35×2	2.810k	2.810k	2.810k	-	-
		TOTAL W	-			2.880k	2.880k	2.880k	560	4.000k
	Annual consumption	TOTAL kWh *4	-			-	1440	-	-	-
	EER/EER CLASS	TOTAL (W/W) *5/ ("A"~"G")	-	-	-	3.47	3.47/A	3.47	5.36	2.75
	Erp *6 Pdesign	kW	-	-	-	-	10.0	-	-	-
	Erp *6 SEER	(W/W)	-	-	-	-	6.4	-	-	-
	Erp *6 Annual consumption	kWh	-	-	-	-	547	-	-	-
	Erp *6 Class		-	-	-	-	A++	-	-	-
	Power factor	%	-	-	-	93	93	93	-	-
	Noise indoor	dB-A (H/M/L) *7	40×2 / 36×2 / 32×2			-			-	-
		Power Level dB	56×2 / 52×2 / 48×2			-			-	-
	Noise outdoor	dB-A (H/L)	-			52/-			-	-
		Power Level dB	-			70/-			-	-
HEATING	Capacity	kW	10.0	10.0	10.0	-	-	-	3.0	12.4
		BTU/h	34100	34100	34100	-	-	-	10200	42300
	Current	A	0.40×2	0.39×2	0.38×2	7.00	6.65	6.40	-	-
	Input power	W	35×2	35×2	35×2	2.470k	2.470k	2.470k	-	-
		TOTAL W	-			2.540k	2.540k	2.540k	560	3.900k
	COP/COP CLASS	TOTAL (W/W) *5/ ("A"~"G")	-	-	-	3.94	3.94/A	3.94	5.36	3.18
	Erp *6 Pdesign at -10°C	kW	-	-	-	-	10.0	-	-	-
	Erp *6 Tbivalent	°C	-	-	-	-	-7	-	-	-
	Erp *6 SCOP	(W/W)	-	-	-	-	3.9	-	-	-
	Erp *6 Annual consumption	kWh	-	-	-	-	3590	-	-	-
	Erp *6 elbu(-10°C)	kW	-	-	-	-	1.69	-	-	-
	Erp *6 Class		-	-	-	-	A	-	-	-
	Power factor	%	-	-	-	93	93	93	-	-
	Noise indoor	dB-A (H/M/L) *7	40×2 / 36×2 / 32×2			-			-	-
		Power Level dB	56×2 / 52×2 / 48×2			-			-	-
	Noise outdoor	dB-A (H/L)	-			52/-			-	-
		Power Level dB	-			70/-			-	-
EXTRA LOW TEMP	Total capacity(kW) / Input power(W) / COP		-						-	
Max Current(A) / Max Input power(W)			0.40×2/35×2	0.39×2/35×2	0.38×2/35×2	9.00/5.55k	9.00/5.80k	9.00/6.05k	-	
Starting current(A) (Cooling/Heating)			-	-	-	7.95/7.00	7.55/6.65	7.30/6.40	-	
Comp output(W)						2.50k	2.50k	2.50k		
Network Impedance(ΩMAX.)			-			-			-	
Fan motor output (Indoor/Outdoor) W			54			120			-	
Moisture removal volume		L/h(Pt/h)	3.6	(1.8×2)	(7.6)	-			-	
External static pressure		Pa	-			-			-	
Indoor Air flow *7	Cooling	m³/min (ft³/min)	16.0×2/13.5×2/11.0×2 (565x2)/(477×2)/(388×2)			-			-	-
	Heating	m³/min (ft³/min)	16.0×2/13.5×2/11.0×2 (565x2)/(477×2)/(388×2)			-			-	-
Outdoor Air flow	Cooling	m³/min (ft³/min)	-			76.0 (2683)			-	-
	Heating	m³/min (ft³/min)	-			70.0 (2472)			-	-
Refrigerant type / amount g(oz)			-			R32	2.60k	(91.7)	-	
Product dimension		Height mm(inch)	302 (11-29/32)			996 (39- 7/32)			-	
		Width mm(inch)	1120 (44-3/32)			980 (38-37/64)			-	
		Depth mm(inch)	236 (9-9/32)			370 (14- 9/16)			-	
Product dimension (Panel)		H×W×D mm, inch	-			-			-	
Packing dimension		Height mm(inch)	282 (11-1/8)			1134 (44-41/64)			-	
		Width mm(inch)	1190 (46-7/8)			1095 (43-7/64)			-	
		Depth mm(inch)	378 (14-29/32)			529 (20-53/64)			-	
Weight		(NET) kg(lb)	13 (29)			90 (199)			-	
		(GROSS) kg(lb)	16 (36)			98 (216)			-	
		Panel (NET) kg(lb)	-			-			-	
Layers limit (actually)			11(12)			2 (3)			-	
Operation condition		Cool (DBT)	18°C ~ 32°C			-10°C ~ 43°C			-	
		Heat (DBT)	16°C ~ 30°C			-15°C ~ 24°C			-	
MAX WORKING PRESSURE HP/LP MPa (bar)			4.15/2.55 (41.5/25.5)						-	
PIPING	Pipe diameter mm (inch)		(Liquid)Ø6.35(1/4) (Gas)Ø12.7(1/2)			(Liquid)Ø9.52(3/8) (Gas)Ø15.88(5/8)			-	
	Connecting method, Standard length m(ft)		flared type, 5.0(16.4)			flared type, 5.0(16.4)			-	
	Pipe length range m (ft)		5 ~ 50m (16.4 ~ 164.0)						-	
	Indoor unit & Outdoor unit height difference m (ft)		15m(OD located lower)/30m(OD located higher) (49.2/98.4)						-	
	Add gas amount g/m (oz/ft)		45g/m (0.484)						-	
	Pipe length for additional gas m (ft)		30m (98.4)						-	

*1 In case it is necessary to indicate the air flow volume in (l/s), the value in (m³/min.) shall be multiplied by 16.7 and rounded down the decimal point.
*2 If the EUROVENT Certified models can be operated under the "extra-low"temperature condition, -7°C dry bulb and -8°C wet-bulb temperatures with rated voltage 230V shall be used.
*3 Network Impedance shall be applicable for EUROPE and CHINA models.
*4 The annual consumption is calculated by multiplying the input power at 230V(400V) by an average of 500 hours per year in cooling mode.
*5 EER and COP classification is at 230V(400V) only in accordance with EU directive 2002/31/EC.
*6 SEER and SCOP classification is at 230V(400V) only in accordance with EN-14825. For heating, SCOP indicates the value of only Average heating season, Other fiche data indicates in an attached sheet
*7 H: High at setting 5 stage (Level 5), M: Middle at setting 5 stage (Level 3), L: Low at setting 5 stage (Level 1)

Simultaneous (Twin) -Type

1-1. Unit Specifications

PZ2

3. Wall Mounted Type S-60PK2E5B×2 / U-125PZ2E8

INDOOR		MODEL	S-60PK2E5B ×2			-			-	
PANEL		MODEL	-			-			-	
OUTDOOR		MODEL	-			U-125PZ2E8			-	
Branch pipe		MODEL	CZ-P155BK1							
Performance test condition			ISO5151 / EN14511 / EN12102/ EN14825							
Power supply		Ø, Hz	1Ø 50Hz			3Ø 50Hz				
		V	220V	230V	240V	380V	400V	415V	Min	Max
COOLING	Capacity	kW	12.5	12.5	12.5	-	-	-	3.2	13.2
		BTU/h	42700	42700	42700	-	-	-	10900	45000
	Current	A	0.60×2	0.59×2	0.58×2	10.6	10.1	9.70	-	-
	Input power	W	60×2	60×2	60×2	3.780k	3.780k	3.780k	-	-
		TOTAL W	-			3.900k	3.900k	3.900k	600	4.800k
	Annual consumption	TOTAL kWh *4	-			-	1950	-	-	-
	EER/EER CLASS	TOTAL (W/W) *5/ ("A"~"G")	-	-	-	3.21	3.21/A	3.21	5.33	2.75
	Erp *6 Pdesign	kW	-	-	-	-	12.5	-	-	-
	Erp *6 $\eta_{s,c}$	%	-	-	-	-	236.3	-	-	-
	Erp *6 Annual consumption	kWh	-	-	-	-	-	-	-	-
	Erp *6 Class		-	-	-	-	-	-	-	-
	Power factor	%	-	-	-	94	94	94	-	-
	Noise indoor	dB-A (H/M/L) *7	47×2/44×2/40×2			-			-	-
		Power Level dB	63×2/60×2/56×2			-			-	-
	Noise outdoor	dB-A (H/L)	-			55/-			-	-
		Power Level dB	-			73/-			-	-
HEATING	Capacity	kW	12.5	12.5	12.5	-	-	-	3.3	15.0
		BTU/h	42700	42700	42700	-	-	-	11300	51200
	Current	A	0.60×2	0.59×2	0.58×2	9.05	8.60	8.30	-	-
	Input power	W	60×2	60×2	60×2	3.240k	3.240k	3.240k	-	-
		TOTAL W	-			3.360k	3.360k	3.360k	600	4.600k
	COP/COP CLASS	TOTAL (W/W) *5/ ("A"~"G")	-	-	-	3.72	3.72/A	3.72	5.50	3.26
	Erp *6 Pdesign at -10°C	kW	-	-	-	-	12.5	-	-	-
	Erp *6 Tbivalent	°C	-	-	-	-	-7	-	-	-
	Erp *6 $\eta_{s,h}$	%	-	-	-	-	139.7	-	-	-
	Erp *6 Annual consumption	kWh	-	-	-	-	-	-	-	-
	Erp *6 elbu(-10°C)	kW	-	-	-	-	2.40	-	-	-
	Erp *6 Class		-	-	-	-	-	-	-	-
	Power factor	%	-	-	-	94	94	94	-	-
	Noise indoor	dB-A (H/M/L) *7	47×2/44×2/40×2			-			-	-
		Power Level dB	63×2/60×2/56×2						-	-
	Noise outdoor	dB-A (H/L)	-			55/-			-	-
		Power Level dB	-			73/-			-	-
EXTRA LOW TEMP	Total capacity(kW) / Input power(W) / COP		-						-	
Max Current(A) / Max Input power(W)			0.60×2/60×2	0.59×2/60×2	0.58×2/60×2	10.0 /6.20k	10.0 /6.50k	10.0 /6.75k	-	
Starting current(A) (Cooling/Heating)			-	-	-	10.6/9.05	10.1/8.60	9.70/8.30	-	
Comp output(W)			-			2.80k	2.80k	2.80k		
Network Impedance(ΩMAX.)			-			-			-	
Fan motor output (Indoor/Outdoor) W			54			120			-	
Moisture removal volume		L/h(Pt/h)	4.0	(2.0×2)	(8.4)	-			-	
External static pressure		Pa	-			-			-	
Indoor Air flow *7	Cooling	m³/min (ft³/min)	20.0×2/17.5×2/14.5×2 (706×2)/(618×2)/(512×2)			-			-	-
	Heating	m³/min (ft³/min)	20.0×2/17.5×2/14.5×2 (706×2)/(618×2)/(512×2)			-			-	-
Outdoor Air flow	Cooling	m³/min (ft³/min)	-			86.0 (3037)			-	-
	Heating	m³/min (ft³/min)	-			78.0 (2754)			-	-
Refrigerant type / amount g(oz)			-			R32	2.98k	(105.1)	-	
Product dimension		Height mm(inch)	302 (11-29/32)			996 (39- 7/32)			-	
		Width mm(inch)	1120 (44-3/32)			980 (38-37/64)			-	
		Depth mm(inch)	236 (9-9/32)			370 (14- 9/16)			-	
Product dimension (Panel)		H×W×D mm, inch	-			-			-	
Packing dimension		Height mm(inch)	282 (11-1/8)			1134 (44-41/64)			-	
		Width mm(inch)	1190 (46-7/8)			1095 (43-7/64)			-	
		Depth mm(inch)	378 (14-29/32)			529 (20-53/64)			-	
Weight		(NET) kg(lb)	14 (31)			94 (207)			-	
		(GROSS) kg(lb)	17 (38)			102 (224)			-	
		Panel (NET) kg(lb)	-			-			-	
Layers limit (actually)			11(12)			2 (3)			-	
Operation condition		Cool (DBT)	18°C ~ 32°C			-10°C ~ 43°C			-	
		Heat (DBT)	16°C ~ 30°C			-15°C ~ 24°C			-	
MAX WORKING PRESSURE HP/LP MPa (bar)			4.15/2.55 (41.5/25.5)						-	
PIPING	Pipe diameter mm (inch)		(Liquid)Ø9.52(3/8) (Gas)Ø15.88(5/8)			(Liquid)Ø9.52(3/8) (Gas)Ø15.88(5/8)			-	
	Connecting method, Standard length m(ft)		flared type, 5.0(16.4)			flared type, 5.0(16.4)			-	
	Pipe length range m (ft)		5 ~ 50m (16.4 ~ 164.0)						-	
	Indoor unit & Outdoor unit height difference m (ft)		15m(OD located lower)/30m(OD located higher) (49.2/98.4)						-	
	Add gas amount g/m (oz/ft)		45g/m (0.484)						-	
	Pipe length for additional gas m (ft)		30m (98.4)						-	

*1 In case it is necessary to indicate the air flow volume in (l/s), the value in (m³/min.) shall be multiplied by 16.7 and rounded down the decimal point.
*2 If the EUROVENT Certified models can be operated under the "extra-low"temperature condition, -7°C dry bulb and -8°C wet-bulb temperatures with rated voltage 230V shall be used.
*3 Network Impedance shall be applicable for EUROPE and CHINA models.
*4 The annual consumption is calculated by multiplying the input power at 230V(400V) by an average of 500 hours per year in cooling mode.
*5 EER and COP classification is at 230V(400V) only in accordance with EU directive 2002/31/EC.
*6 $\eta_{s,c}$ and $\eta_{s,h}$ classification is at 230V(400V) only in accordance with EN-14825. For heating, $\eta_{s,h}$ indicates the value of only Average heating season.
*7 H: High at setting 5 stage (Level 5), M: Middle at setting 5 stage (Level 3), L: Low at setting 5 stage (Level 1)

Simultaneous (Twin) -Type

1-1. Unit Specifications

PZ2

3. Wall Mounted Type S-71PK2E5B×2 / U-140PZ2E8

INDOOR		MODEL	S-71PK2E5B ×2			-			-	
PANEL		MODEL	-			-			-	
OUTDOOR		MODEL	-			U-140PZ2E8			-	
Branch pipe		MODEL	CZ-P155BK1							
Performance test condition			ISO5151 / EN14511 / EN12102/ EN14825							
Power supply		Ø, Hz	1Ø 50Hz			3Ø 50Hz				
		V	220V	230V	240V	380V	400V	415V	Min	Max
COOLING	Capacity	kW	14.0	14.0	14.0	-	-	-	3.3	15.0
		BTU/h	47800	47800	47800	-	-	-	11300	51200
	Current	A	0.60×2	0.59×2	0.58×2	13.2	12.6	12.1	-	-
	Input power	W	60×2	60×2	60×2	4.720k	4.720k	4.720k	-	-
		TOTAL W	-			4.840k	4.840k	4.840k	620	5.600k
	Annual consumption	TOTAL kWh *4	-			-	2420	-	-	-
	EER/EER CLASS	TOTAL (W/W) *5/ ("A"~"G")	-	-	-	2.89	2.89/C	2.89	5.32	2.68
	Erp *6 Pdesign	kW	-	-	-	-	14.0	-	-	-
	Erp *6 $\eta_{s,c}$	%	-	-	-	-	228	-	-	-
	Erp *6 Annual consumption	kWh	-	-	-	-	-	-	-	-
	Erp *6 Class		-	-	-	-	-	-	-	-
	Power factor	%	-	-	-	94	94	94	-	-
	Noise indoor	dB-A (H/M/L) *7	47×2/44×2/40×2			-			-	-
		Power Level dB	63×2/60×2/56×2			-			-	-
	Noise outdoor	dB-A (H/L)	-			56/-			-	-
		Power Level dB	-			74/-			-	-
HEATING	Capacity	kW	14.0	14.0	14.0	-	-	-	3.4	16.0
		BTU/h	47800	47800	47800	-	-	-	11600	54600
	Current	A	0.60×2	0.59×2	0.58×2	10.7	10.2	9.8	-	-
	Input power	W	60×2	60×2	60×2	3.830k	3.830k	3.830k	-	-
		TOTAL W	-			3.950k	3.950k	3.950k	620	5.000k
	COP/COP CLASS	TOTAL (W/W) *5/ ("A"~"G")	-	-	-	3.54	3.54/B	3.54	5.48	3.20
	Erp *6 Pdesign at -10°C	kW	-	-	-	-	13.6	-	-	-
	Erp *6 Tbivalent	°C	-	-	-	-	-7	-	-	-
	Erp *6 $\eta_{s,h}$	%	-	-	-	-	137.7	-	-	-
	Erp *6 Annual consumption	kWh	-	-	-	-	-	-	-	-
	Erp *6 elbu(-10°C)	kW	-	-	-	-	2.80	-	-	-
	Erp *6 Class		-	-	-	-	-	-	-	-
	Power factor	%	-	-	-	94	94	94	-	-
	Noise indoor	dB-A (H/M/L) *7	47×2/44×2/40×2			-			-	-
		Power Level dB	63×2/60×2/56×2						-	-
	Noise outdoor	dB-A (H/L)	-			56/-			-	-
		Power Level dB	-			74/-			-	-
EXTRA LOW TEMP	Total capacity(kW) / Input power(W) / COP		-						-	
Max Current(A) / Max Input power(W)			0.60×2/60×2	0.59×2/60×2	0.58×2/60×2	10.5/6.50k	10.5/6.85k	10.5/7.10k	-	
Starting current(A) (Cooling/Heating)			-	-	-	13.2/10.7	12.6/10.2	12.1/9.80	-	
Comp output(W)			-			3.00k	3.00k	3.00k		
Network Impedance(ΩMAX.)			-			-			-	
Fan motor output (Indoor/Outdoor) W			54			120			-	
Moisture removal volume		L/h(Pt/h)	6.0	(3.0×2)	(12.6)	-			-	
External static pressure		Pa	-			-			-	
Indoor Air flow *7	Cooling	m³/min (ft³/min)	20.0×2/17.5×2/14.5×2 (706×2)/(618×2)/(512×2)			-			-	-
	Heating	m³/min (ft³/min)	20.0×2/17.5×2/14.5×2 (706×2)/(618×2)/(512×2)			-			-	-
Outdoor Air flow	Cooling	m³/min (ft³/min)	-			89.0 (3143)			-	-
	Heating	m³/min (ft³/min)	-			83.0 (2931)			-	-
Refrigerant type / amount g(oz)			-			R32	2.98k	(105.1)	-	
Product dimension		Height mm(inch)	302 (11-29/32)			996 (39- 7/32)			-	
		Width mm(inch)	1120 (44-3/32)			980 (38-37/64)			-	
		Depth mm(inch)	236 (9-9/32)			370 (14- 9/16)			-	
Product dimension (Panel)		H×W×D mm, inch	-			-			-	
Packing dimension		Height mm(inch)	282 (11-1/8)			1134 (44-41/64)			-	
		Width mm(inch)	1190 (46-7/8)			1095 (43-7/64)			-	
		Depth mm(inch)	378 (14-29/32)			529 (20-53/64)			-	
Weight		(NET) kg(lb)	14 (31)			94 (207)			-	
		(GROSS) kg(lb)	17 (38)			102 (224)			-	
		Panel (NET) kg(lb)	-			-			-	
Layers limit (actually)			11(12)			2 (3)			-	
Operation condition		Cool (DBT)	18°C ~ 32°C			-10°C ~ 43°C			-	
		Heat (DBT)	16°C ~ 30°C			-15°C ~ 24°C			-	
MAX WORKING PRESSURE HP/LP MPa (bar)			4.15/2.55 (41.5/25.5)						-	
PIPING	Pipe diameter mm (inch)		(Liquid)Ø9.52(3/8) (Gas)Ø15.88(5/8)			(Liquid)Ø9.52(3/8) (Gas)Ø15.88(5/8)			-	
	Connecting method, Standard length m(ft)		flared type, 5.0(16.4)			flared type, 5.0(16.4)			-	
	Pipe length range m (ft)		5 ~ 50m (16.4 ~ 164.0)						-	
	Indoor unit & Outdoor unit height difference m (ft)		15m(OD located lower)/30m(OD located higher) (49.2/98.4)						-	
	Add gas amount g/m (oz/ft)		45g/m (0.484)						-	
	Pipe length for additional gas m (ft)		30m (98.4)						-	

*1 In case it is necessary to indicate the air flow volume in (l/s), the value in (m³/min.) shall be multiplied by 16.7 and rounded down the decimal point.
*2 If the EUROVENT Certified models can be operated under the "extra-low"temperature condition, -7°C dry bulb and -8°C wet-bulb temperatures with rated voltage 230V shall be used.
*3 Network Impedance shall be applicable for EUROPE and CHINA models.
*4 The annual consumption is calculated by multiplying the input power at 230V(400V) by an average of 500 hours per year in cooling mode.
*5 EER and COP classification is at 230V(400V) only in accordance with EU directive 2002/31/EC.
*6 $\eta_{s,c}$ and $\eta_{s,h}$ classification is at 230V(400V) only in accordance with EN-14825. For heating, $\eta_{s,h}$ indicates the value of only Average heating season.
*7 H: High at setting 5 stage (Level 5), M: Middle at setting 5 stage (Level 3), L: Low at setting 5 stage (Level 1)

Single -Type

1-1. Unit Specifications

PZ2

3. Wall Mounted Type S-100PK2E5B / U-100PZ2E8

INDOOR		MODEL	S-100PK2E5B			-			-	
PANEL		MODEL	-			-			-	
OUTDOOR		MODEL	-			U-100PZ2E8			-	
Branch pipe		MODEL	-							
Performance test condition			ISO5151 / EN14511 / EN12102/ EN14825							
Power supply		Ø, Hz	1Ø 50Hz			3Ø 50Hz				
		V	220V	230V	240V	380V	400V	415V	Min	Max
COOLING	Capacity	kW	9.0	9.0	9.0	-	-	-	3.0	9.7
		BTU/h	30700	30700	30700	-	-	-	10200	33100
	Current	A	0.70	0.68	0.66	4.10	3.90	3.75	-	-
	Input power	W	75	75	75	2.515k	2.515k	2.515k	-	-
		TOTAL W	-			2.590k	2.590k	2.590k	560	3.100k
	Annual consumption	TOTAL kWh *4	-			-	1295	-	-	-
	EER/EER CLASS	TOTAL (W/W) *5/ ("A"~"G")	-	-	-	3.47	3.47/A	3.47	5.36	3.13
	Erp *6 Pdesign	kW	-	-	-	-	9.0	-	-	-
	Erp *6 SEER	(W/W)	-	-	-	-	6.5	-	-	-
	Erp *6 Annual consumption	kWh	-	-	-	-	485	-	-	-
	Erp *6 Class		-	-	-	-	A++	-	-	-
	Power factor	%	-	-	-	93	93	93	-	-
	Noise indoor	dB-A (H/M/L) *7	49/45/41			-			-	-
		Power Level dB	65/61/57			-			-	-
	Noise outdoor	dB-A (H/L)	-			52/-			-	-
		Power Level dB	-			70/-			-	-
HEATING	Capacity	kW	9.0	9.0	9.0	-	-	-	3.0	10.5
		BTU/h	30700	30700	30700	-	-	-	10200	35800
	Current	A	0.70	0.68	0.66	3.60	3.45	3.30	-	-
	Input power	W	75	75	75	2.215k	2.215k	2.215k	-	-
		TOTAL W	-			2.290k	2.290k	2.290k	560	2.950k
	COP/COP CLASS	TOTAL (W/W) *5/ ("A"~"G")	-	-	-	3.93	3.93 /A	3.93	5.36	3.56
	Erp *6 Pdesign at -10°C	kW	-	-	-	-	9.0	-	-	-
	Erp *6 Tbivalent	°C	-	-	-	-	-7	-	-	-
	Erp *6 SCOP	(W/W)	-	-	-	-	3.9	-	-	-
	Erp *6 Annual consumption	kWh	-	-	-	-	3231	-	-	-
	Erp *6 elbu(-10°C)	kW	-	-	-	-	1.40	-	-	-
	Erp *6 Class		-	-	-	-	A	-	-	-
	Power factor	%	-	-	-	93	93	93	-	-
	Noise indoor	dB-A (H/M/L) *7	49/45/41			-			-	-
		Power Level dB	65/61/57			-			-	-
	Noise outdoor	dB-A (H/L)	-			52/-			-	-
		Power Level dB	-			70/-			-	-
EXTRA LOW TEMP	Total capacity(kW) / Input power(W) / COP		-						-	
Max Current(A) / Max Input power(W)			0.70/75	0.68/75	0.66/75	9.00/5.55k	9.00/5.80k	9.00/6.05k	-	
Starting current(A) (Cooling/Heating)			-	-	-	4.10/3.60	3.90/3.45	3.75/3.30	-	
Comp output(W)						2.50k	2.50k	2.50k		
Network Impedance(ΩMAX.)			-			-			-	
Fan motor output (Indoor/Outdoor) W			54			120			-	
Moisture removal volume		L/h(Pt/h)	4.3		(9.0)	-			-	
External static pressure		Pa	-			-			-	
Indoor Air flow *7	Cooling	m³/min (ft³/min)	22.0/18.5/15.0 (777)/(653)/(530)			-			-	-
	Heating	m³/min (ft³/min)	22.0/18.5/15.0 (777)/(653)/(530)			-			-	-
Outdoor Air flow	Cooling	m³/min (ft³/min)	-			76.0 (2683)			-	-
	Heating	m³/min (ft³/min)	-			70.0 (2472)			-	-
Refrigerant type / amount g(oz)			-			R32 2.60k (91.7)			-	
Product dimension		Height mm(inch)	302 (11-29/32)			996 (39- 7/32)			-	
		Width mm(inch)	1120 (44-3/32)			980 (38-37/64)			-	
		Depth mm(inch)	236 (9-9/32)			370 (14- 9/16)			-	
Product dimension (Panel)		H×W×D mm, inch	-			-			-	
Packing dimension		Height mm(inch)	282 (11-1/8)			1134 (44-41/64)			-	
		Width mm(inch)	1190 (46-7/8)			1095 (43-7/64)			-	
		Depth mm(inch)	378 (14-29/32)			529 (20-53/64)			-	
Weight		(NET) kg(lb)	14 (31)			90 (199)			-	
		(GROSS) kg(lb)	17 (38)			98 (216)			-	
		Panel (NET) kg(lb)	-			-			-	
Layers limit (actually)			11(12)			2 (3)			-	
Operation condition		Cool (DBT)	18°C ~ 32°C			-10°C ~ 43°C			-	
		Heat (DBT)	16°C ~ 30°C			-15°C ~ 24°C			-	
MAX WORKING PRESSURE HP/LP MPa (bar)			4.15/2.55 (41.5/25.5)						-	
PIPING	Pipe diameter mm (inch)		(Liquid)Ø9.52(3/8) (Gas)Ø15.88(5/8)			(Liquid)Ø9.52(3/8) (Gas)Ø15.88(5/8)			-	
	Connecting method, Standard length m(ft)		flared type, 5.0(16.4)			flared type, 5.0(16.4)			-	
	Pipe length range m (ft)		5 ~ 50m (16.4 ~ 164.0)						-	
	Indoor unit & Outdoor unit height difference m (ft)		15m(OD located lower)/30m(OD located higher) (49.2/98.4)						-	
	Add gas amount g/m (oz/ft)		45g/m (0.484)						-	
	Pipe length for additional gas m (ft)		30m (98.4)						-	

*1 In case it is necessary to indicate the air flow volume in (l/s), the value in (m³/min.) shall be multiplied by 16.7 and rounded down the decimal point.
*2 If the EUROVENT Certified models can be operated under the "extra-low"temperature condition, -7°C dry bulb and -8°C wet-bulb temperatures with rated voltage 230V shall be used.
*3 Network Impedance shall be applicable for EUROPE and CHINA models.
*4 The annual consumption is calculated by multiplying the input power at 230V(400V) by an average of 500 hours per year in cooling mode.
*5 EER and COP classification is at 230V(400V) only in accordance with EU directive 2002/31/EC.
*6 SEER and SCOP classification is at 230V(400V) only in accordance with EN-14825. For heating, SCOP indicates the value of only Average heating season, Other fiche data indicates in an attached sheet
*7 H: High at setting 5 stage (Level 5), M: Middle at setting 5 stage (Level 3), L: Low at setting 5 stage (Level 1)

Simultaneous (Twin) -Type

1-1. Unit Specifications

PZ2

4. Low Silhouette Ducted Type S-50PF1E5B×2 / U-100PZ2E5

INDOOR		MODEL	S-50PF1E5B ×2			-			-	
PANEL		MODEL	-			-			-	
OUTDOOR		MODEL	-			U-100PZ2E5			-	
Branch pipe		MODEL	CZ-P155BK1							
Performance test condition			ISO13253 / EN14511 / EN12102/ EN14825							
Power supply		Ø, Hz	1Ø 50Hz			1Ø 50Hz				
		V	220V	230V	240V	220V	230V	240V	Min	Max
COOLING	Capacity	kW	10.0	10.0	10.0	-	-	-	3.0	11.5
		BTU/h	34100	34100	34100	-	-	-	10200	39200
	Current	A	0.77×2	0.74×2	0.71×2	12.1	11.6	11.1	-	-
	Input power	W	100×2	100×2	100×2	2.535k	2.535k	2.535k	-	-
		TOTAL W	-			2.735k	2.735k	2.735k	560	4.090k
	Annual consumption	TOTAL kWh *4	-			-	1367.5	-	-	-
	EER/EER CLASS	TOTAL (W/W) *5/ ("A"~"G")	-	-	-	3.66	3.66/A	3.66	5.36	2.81
	Erp *6 Pdesign	kW	-	-	-	-	10.0	-	-	-
	Erp *6 SEER	(W/W)	-	-	-	-	5.4	-	-	-
	Erp *6 Annual consumption	kWh	-	-	-	-	648	-	-	-
	Erp *6 Class		-	-	-	-	A	-	-	-
	Power factor	%	-	-	-	95	95	95	-	-
	Noise indoor	dB-A (H/M/L)	34×2/30×2/26×2			-			-	-
		Power Level dB	56×2/52×2/48×2			-			-	-
	Noise outdoor	dB-A (H/L)	-			52/-			-	-
		Power Level dB	-			70/-			-	-
HEATING	Capacity	kW	10.0	10.0	10.0	-	-	-	3.0	14.0
		BTU/h	34100	34100	34100	-	-	-	10200	47800
	Current	A	0.77×2	0.74×2	0.71×2	10.10	9.70	9.30	-	-
	Input power	W	100×2	100×2	100×2	2.120k	2.120k	2.120k	-	-
		TOTAL W	-			2.320k	2.320k	2.320k	560	3.990k
	COP/COP CLASS	TOTAL (W/W) *5/ ("A"~"G")	-	-	-	4.31	4.31 /A	4.31	5.36	3.51
	Erp *6 Pdesign at -10°C	kW	-	-	-	-	10.0	-	-	-
	Erp *6 Tbivalent	°C	-	-	-	-	-10	-	-	-
	Erp *6 SCOP	(W/W)	-	-	-	-	3.8	-	-	-
	Erp *6 Annual consumption	kWh	-	-	-	-	3684	-	-	-
	Erp *6 elbu(-10°C)	kW	-	-	-	-	0.00	-	-	-
	Erp *6 Class		-	-	-	-	A	-	-	-
	Power factor	%	-	-	-	95	95	95	-	-
	Noise indoor	dB-A (H/M/L)	34×2/30×2/26×2			-			-	-
		Power Level dB	56×2/52×2/48×2			-			-	-
	Noise outdoor	dB-A (H/L)	-			52/-			-	-
		Power Level dB	-			70/-			-	-
EXTRA LOW TEMP	Total capacity(kW) / Input power(W) / COP		-						-	
Max Current(A) / Max Input power(W)			1.00×2/125×2	0.96×2/125×2	0.92×2/125×2	25.0/5.25k	25.0/5.50k	25.0/5.70k	-	
Starting current(A) (Cooling/Heating)			-	-	-	12.1/10.1	11.6/9.7	11.1/9.3	-	
Comp output(W)						2.50k	2.50k	2.50k		
Network Impedance(ΩMAX.)			-			-			-	
Fan motor output (Indoor/Outdoor) W			119			120			-	
Moisture removal volume		L/h(Pt/h)	5.6	(2.8×2)	(11.8)	-			-	
External static pressure		Pa	-			-			-	
Indoor Air flow	Cooling	m³/min (ft³/min)	16.0×2/15.0×2/12.0×2 (565x2)/(530×2)/(424×2)			-			-	-
	Heating	m³/min (ft³/min)	16.0×2/15.0×2/12.0×2 (565x2)/(530×2)/(424×2)			-			-	-
Outdoor Air flow	Cooling	m³/min (ft³/min)	-			76.0 (2683)			-	-
	Heating	m³/min (ft³/min)	-			70.0 (2472)			-	-
Refrigerant type / amount g(oz)			-			R32	2.60k	(91.7)	-	
Product dimension		Height mm(inch)	290 (11-13/32)			996 (39-7/32)			-	
		Width mm(inch)	800 (31-1/2)			980 (38-37/64)			-	
		Depth mm(inch)	700 (27-9/16)			370 (14-9/16)			-	
Product dimension (Panel)		H×W×D mm, inch	-			-			-	
Packing dimension		Height mm(inch)	355 (13-31/32)			1134 (44-41/64)			-	
		Width mm(inch)	1014 (39-15/16)			1095 (43-7/64)			-	
		Depth mm(inch)	850 (33-15/32)			529 (20-53/64)			-	
Weight		(NET) kg(lb)	28 (62)			90 (199)			-	
		(GROSS) kg(lb)	35 (78)			98 (216)			-	
		Panel (NET) kg(lb)	-			-			-	
Layers limit (actually)			9(10)			2 (3)			-	
Operation condition		Cool (DBT)	18°C ~ 32°C			-10°C ~ 43°C			-	
		Heat (DBT)	16°C ~ 30°C			-15°C ~ 24°C			-	
MAX WORKING PRESSURE HP/LP MPa (bar)			4.15/2.55 (41.5/25.5)						-	
PIPING	Pipe diameter mm (inch)		(Liquid)Ø6.35(1/4) (Gas)Ø12.7(1/2)			(Liquid)Ø9.52(3/8) (Gas)Ø15.88(5/8)			-	
	Connecting method, Standard length m(ft)		flared type, 5.0(16.4)			flared type, 5.0(16.4)			-	
	Pipe length range m (ft)		5 ~ 50m (16.4 ~ 164.0)						-	
	Indoor unit & Outdoor unit height difference m (ft)		15m(OD located lower)/30m(OD located higher) (49.2/98.4)						-	
	Add gas amount g/m (oz/ft)		45g/m (0.484)						-	
	Pipe length for additional gas m (ft)		30m (98.4)						-	

*1 In case it is necessary to indicate the air flow volume in (l/s), the value in (m³/min.) shall be multiplied by 16.7 and rounded down the decimal point.
*2 If the EUROVENT Certified models can be operated under the "extra-low"temperature condition, -7°C dry bulb and -8°C wet-bulb temperatures with rated voltage 230V shall be used.
*3 Network Impedance shall be applicable for EUROPE and CHINA models.
*4 The annual consumption is calculated by multiplying the input power at 230V(400V) by an average of 500 hours per year in cooling mode.
*5 EER and COP classification is at 230V(400V) only in accordance with EU directive 2002/31/EC.
*6 SEER and SCOP classification is at 230V(400V) only in accordance with EN-14825. For heating, SCOP indicates the value of only Average heating season, Other fiche data indicates in an attached sheet

Simultaneous (Twin) -Type

1-1. Unit Specifications

PZ2

4. Low Silhouette Ducted Type S-60PF1E5B×2 / U-125PZ2E5

INDOOR		MODEL	S-60PF1E5B ×2			-			-	
PANEL		MODEL	-			-			-	
OUTDOOR		MODEL	-			U-125PZ2E5			-	
Branch pipe		MODEL	CZ-P155BK1							
Performance test condition			ISO13253 / EN14511 / EN12102/ EN14825							
Power supply		Ø, Hz	1Ø 50Hz			1Ø 50Hz				
		V	220V	230V	240V	220V	230V	240V	Min	Max
COOLING	Capacity	kW	12.5	12.5	12.5	-	-	-	3.2	13.5
		BTU/h	42700	42700	42700	-	-	-	10900	46100
	Current	A	0.91×2	0.89×2	0.87×2	16.1	15.5	14.8	-	-
	Input power	W	120×2	120×2	120×2	3.335k	3.335k	3.335k	-	-
		TOTAL W	-			3.575k	3.575k	3.575k	600	4.820k
	Annual consumption	TOTAL kWh *4	-			-	1787.5	-	-	-
	EER/EER CLASS	TOTAL (W/W) *5/ ("A"~"G")	-	-	-	3.50	3.50/A	3.50	5.33	2.80
	Erp *6 Pdesign	kW	-	-	-	-	12.5	-	-	-
	Erp *6 $\eta_{s,c}$	%	-	-	-	-	233.8	-	-	-
	Erp *6 Annual consumption	kWh	-	-	-	-	-	-	-	-
	Erp *6 Class		-	-	-	-	-	-	-	-
	Power factor	%	-	-	-	94	94	94	-	-
	Noise indoor	dB-A (H/M/L)	35×2/32×2/26×2			-			-	-
		Power Level dB	57×2/54×2/48×2			-			-	-
	Noise outdoor	dB-A (H/L)	-			55/-			-	-
		Power Level dB	-			73/-			-	-
HEATING	Capacity	kW	12.5	12.5	12.5	-	-	-	3.3	15.0
		BTU/h	42700	42700	42700	-	-	-	11300	51200
	Current	A	0.91×2	0.89×2	0.87×2	14.0	13.4	12.9	-	-
	Input power	W	120×2	120×2	120×2	2.900k	2.900k	2.900k	-	-
		TOTAL W	-			3.140k	3.140k	3.140k	600	4.350k
	COP/COP CLASS	TOTAL (W/W) *5/ ("A"~"G")	-	-	-	3.98	3.98/A	3.98	5.50	3.45
	Erp *6 Pdesign at -10°C	kW	-	-	-	-	12.5	-	-	-
	Erp *6 Tbivalent	°C	-	-	-	-	-7	-	-	-
	Erp *6 $\eta_{s,h}$	%	-	-	-	-	142.7	-	-	-
	Erp *6 Annual consumption	kWh	-	-	-	-	-	-	-	-
	Erp *6 elbu(-10°C)	kW	-	-	-	-	2.30	-	-	-
	Erp *6 Class		-	-	-	-	-	-	-	-
	Power factor	%	-	-	-	94	94	94	-	-
	Noise indoor	dB-A (H/M/L)	35×2/32×2/26×2			-			-	-
		Power Level dB	57×2/54×2/48×2						-	-
	Noise outdoor	dB-A (H/L)	-			55/-			-	-
		Power Level dB	-			73/-			-	-
EXTRA LOW TEMP	Total capacity(kW) / Input power(W) / COP		-						-	
Max Current(A) / Max Input power(W)			1.26×2/160×2	1.20×2/160×2	1.15×2/160×2	29.0/6.00k	29.0/6.30k	29.0/6.60k	-	
Starting current(A) (Cooling/Heating)			-	-	-	16.1/14.0	15.5/13.4	14.8/12.9	-	
Comp output(W)			-			2.80k	2.80k	2.80k		
Network Impedance(ΩMAX.)			-			-			-	
Fan motor output (Indoor/Outdoor) W			124			120			-	
Moisture removal volume		L/h(Pt/h)	6.8	(3.4×2)	(14.3)	-			-	
External static pressure		Pa	-			-			-	
Indoor Air flow	Cooling	m³/min (ft³/min)	21.0×2/19.0×2/15.0×2 (742x2)/(671×2)/(530×2)			-			-	-
Indoor Air flow	Heating	m³/min (ft³/min)	21.0×2/19.0×2/15.0×2 (742x2)/(671×2)/(530×2)			-			-	-
Outdoor Air flow	Cooling	m³/min (ft³/min)	-			86.0 (3037)			-	-
Outdoor Air flow	Heating	m³/min (ft³/min)	-			78.0 (2754)			-	-
Refrigerant type / amount g(oz)			-			R32	2.98k	(105.1)	-	
Product dimension		Height mm(inch)	290 (11-13/32)			996 (39-7/32)			-	
		Width mm(inch)	1000 (39-3/8)			980 (38-37/64)			-	
		Depth mm(inch)	700 (27-9/16)			370 (14-9/16)			-	
Product dimension (Panel)		H×W×D mm, inch	-			-			-	
Packing dimension		Height mm(inch)	355 (13-31/32)			1134 (44-41/64)			-	
		Width mm(inch)	1214 (47-13/16)			1095 (43-7/64)			-	
		Depth mm(inch)	850 (33-15/32)			529 (20-53/64)			-	
Weight		(NET) kg(lb)	33 (73)			94 (207)			-	
		(GROSS) kg(lb)	41 (91)			102 (224)			-	
		Panel (NET) kg(lb)	-			-			-	
Layers limit (actually)			9(10)			2 (3)			-	
Operation condition		Cool (DBT)	18°C ~ 32°C			-10°C ~ 43°C			-	
		Heat (DBT)	16°C ~ 30°C			-15°C ~ 24°C			-	
MAX WORKING PRESSURE HP/LP MPa (bar)			4.15/2.55 (41.5/25.5)						-	
PIPING	Pipe diameter mm (inch)		(Liquid)Ø9.52(3/8) (Gas)Ø15.88(5/8)			(Liquid)Ø9.52(3/8) (Gas)Ø15.88(5/8)			-	
	Connecting method, Standard length m(ft)		flared type, 5.0(16.4)			flared type, 5.0(16.4)			-	
	Pipe length range m (ft)		5 ~ 50m (16.4 ~ 164.0)						-	
	Indoor unit & Outdoor unit height difference m (ft)		15m(OD located lower)/30m(OD located higher) (49.2/98.4)						-	
	Add gas amount g/m (oz/ft)		45g/m (0.484)						-	
	Pipe length for additional gas m (ft)		30m (98.4)						-	

*1 In case it is necessary to indicate the air flow volume in (l/s), the value in (m³/min.) shall be multiplied by 16.7 and rounded down the decimal point.
*2 If the EUROVENT Certified models can be operated under the "extra-low"temperature condition, -7°C dry bulb and -8°C wet-bulb temperatures with rated voltage 230V shall be used.
*3 Network Impedance shall be applicable for EUROPE and CHINA models.
*4 The annual consumption is calculated by multiplying the input power at 230V(400V) by an average of 500 hours per year in cooling mode.
*5 EER and COP classification is at 230V(400V) only in accordance with EU directive 2002/31/EC.
*6 $\eta_{s,c}$ and $\eta_{s,h}$ classification is at 230V(400V) only in accordance with EN-14825. For heating, $\eta_{s,h}$ indicates the value of only Average heating season.

Simultaneous (Twin) -Type

1-1. Unit Specifications

PZ2

4. Low Silhouette Ducted Type S-71PF1E5B×2 / U-140PZ2E5

INDOOR		MODEL	S-71PF1E5B ×2			-			-	
PANEL		MODEL	-			-			-	
OUTDOOR		MODEL	-			U-140PZ2E5			-	
Branch pipe		MODEL	CZ-P155BK1							
Performance test condition			ISO13253 / EN14511 / EN12102/ EN14825							
Power supply		Ø, Hz	1Ø 50Hz			1Ø 50Hz				
		V	220V	230V	240V	220V	230V	240V	Min	Max
COOLING	Capacity	kW	14.0	14.0	14.0	-	-	-	3.3	15.0
		BTU/h	47800	47800	47800	-	-	-	11300	51200
	Current	A	0.91×2	0.89×2	0.87×2	20.2	19.3	18.6	-	-
	Input power	W	120×2	120×2	120×2	4.175k	4.175k	4.175k	-	-
		TOTAL W	-			4.415k	4.415k	4.415k	620	5.560k
	Annual consumption	TOTAL kWh *4	-			-	2207.5	-	-	-
	EER/EER CLASS	TOTAL (W/W) *5/ ("A"~"G")	-	-	-	3.17	3.17/B	3.17	5.32	2.70
	Erp *6 Pdesign	kW	-	-	-	-	14.0	-	-	-
	Erp *6 $\eta_{s,c}$	%	-	-	-	-	222.3	-	-	-
	Erp *6 Annual consumption	kWh	-	-	-	-	-	-	-	-
	Erp *6 Class		-	-	-	-	-	-	-	-
	Power factor	%	-	-	-	94	94	94	-	-
	Noise indoor	dB-A (H/M/L)	35×2/32×2/26×2			-			-	-
		Power Level dB	57×2/54×2/48×2			-			-	-
	Noise outdoor	dB-A (H/L)	-			56/-			-	-
		Power Level dB	-			74/-			-	-
HEATING	Capacity	kW	14.0	14.0	14.0	-	-	-	3.4	16.0
		BTU/h	47800	47800	47800	-	-	-	11600	54600
	Current	A	0.91×2	0.89×2	0.87×2	16.8	16.0	15.3	-	-
	Input power	W	120×2	120×2	120×2	3.465k	3.465k	3.465k	-	-
		TOTAL W	-			3.705k	3.705k	3.705k	620	5.120k
	COP/COP CLASS	TOTAL (W/W) *5/ ("A"~"G")	-	-	-	3.78	3.78/A	3.78	5.48	3.13
	Erp *6 Pdesign at -10°C	kW	-	-	-	-	13.6	-	-	-
	Erp *6 Tbivalent	°C	-	-	-	-	-7	-	-	-
	Erp *6 $\eta_{s,h}$	%	-	-	-	-	139.4	-	-	-
	Erp *6 Annual consumption	kWh	-	-	-	-	-	-	-	-
	Erp *6 elbu(-10°C)	kW	-	-	-	-	2.70	-	-	-
	Erp *6 Class		-	-	-	-	-	-	-	-
	Power factor	%	-	-	-	94	94	94	-	-
	Noise indoor	dB-A (H/M/L)	35×2/32×2/26×2			-			-	-
		Power Level dB	57×2/54×2/48×2						-	-
	Noise outdoor	dB-A (H/L)	-			56/-			-	-
		Power Level dB	-			74/-			-	-
EXTRA LOW TEMP	Total capacity(kW) / Input power(W) / COP		-						-	
Max Current(A) / Max Input power(W)			1.26×2/160×2	1.20×2/160×2	1.15×2/160×2	30.0/6.25k	30.0/6.50k	30.0/6.80k	-	
Starting current(A) (Cooling/Heating)			-	-	-	20.2/16.8	19.3/16.0	18.6/15.3	-	
Comp output(W)			-			3.00k	3.00k	3.00k		
Network Impedance(ΩMAX.)			-			-			-	
Fan motor output (Indoor/Outdoor) W			124			120			-	
Moisture removal volume		L/h(Pt/h)	8.4	(4.2×2)	(17.6)	-			-	
External static pressure		Pa	-			-			-	
Indoor Air flow	Cooling	m³/min (ft³/min)	21.0×2/19.0×2/15.0×2 (742x2)/(671×2)/(530×2)			-			-	-
Indoor Air flow	Heating	m³/min (ft³/min)	21.0×2/19.0×2/15.0×2 (742x2)/(671×2)/(530×2)			-			-	-
Outdoor Air flow	Cooling	m³/min (ft³/min)	-			89.0 (3143)			-	-
Outdoor Air flow	Heating	m³/min (ft³/min)	-			83.0 (2931)			-	-
Refrigerant type / amount g(oz)			-			R32	2.98k	(105.1)	-	
Product dimension		Height mm(inch)	290 (11-13/32)			996 (39-7/32)			-	
		Width mm(inch)	1000 (39-3/8)			980 (38-37/64)			-	
		Depth mm(inch)	700 (27-9/16)			370 (14-9/16)			-	
Product dimension (Panel)		H×W×D mm, inch	-			-			-	
Packing dimension		Height mm(inch)	355 (13-31/32)			1134 (44-41/64)			-	
		Width mm(inch)	1214 (47-13/16)			1095 (43-7/64)			-	
		Depth mm(inch)	850 (33-15/32)			529 (20-53/64)			-	
Weight		(NET) kg(lb)	33 (73)			94 (207)			-	
		(GROSS) kg(lb)	41 (91)			102 (224)			-	
		Panel (NET) kg(lb)	-			-			-	
Layers limit (actually)			9(10)			2 (3)			-	
Operation condition		Cool (DBT)	18°C ~ 32°C			-10°C ~ 43°C			-	
		Heat (DBT)	16°C ~ 30°C			-15°C ~ 24°C			-	
MAX WORKING PRESSURE HP/LP MPa (bar)			4.15/2.55 (41.5/25.5)							
PIPING	Pipe diameter mm (inch)		(Liquid)Ø9.52(3/8) (Gas)Ø15.88(5/8)			(Liquid)Ø9.52(3/8) (Gas)Ø15.88(5/8)			-	
	Connecting method, Standard length m(ft)		flared type, 5.0(16.4)			flared type, 5.0(16.4)			-	
	Pipe length range m (ft)		5 ~ 50m (16.4 ~ 164.0)						-	
	Indoor unit & Outdoor unit height difference m (ft)		15m(OD located lower)/30m(OD located higher) (49.2/98.4)						-	
	Add gas amount g/m (oz/ft)		45g/m (0.484)						-	
	Pipe length for additional gas m (ft)		30m (98.4)						-	

*1 In case it is necessary to indicate the air flow volume in (l/s), the value in (m³/min.) shall be multiplied by 16.7 and rounded down the decimal point.
*2 If the EUROVENT Certified models can be operated under the "extra-low"temperature condition, -7°C dry bulb and -8°C wet-bulb temperatures with rated voltage 230V shall be used.
*3 Network Impedance shall be applicable for EUROPE and CHINA models.
*4 The annual consumption is calculated by multiplying the input power at 230V(400V) by an average of 500 hours per year in cooling mode.
*5 EER and COP classification is at 230V(400V) only in accordance with EU directive 2002/31/EC.
*6 $\eta_{s,c}$ and $\eta_{s,h}$ classification is at 230V(400V) only in accordance with EN-14825. For heating, $\eta_{s,h}$ indicates the value of only Average heating season.

Single -Type

1-1. Unit Specifications

PZ2

4. Low Silhouette Ducted Type S-100PF1E5B / U-100PZ2E5

INDOOR		MODEL	S-100PF1E5B			-			-	
PANEL		MODEL	-			-			-	
OUTDOOR		MODEL	-			U-100PZ2E5			-	
Branch pipe		MODEL	-							
Performance test condition			ISO13253 / EN14511 / EN12102/ EN14825							
Power supply		Ø, Hz	1Ø 50Hz			1Ø 50Hz				
		V	220V	230V	240V	220V	230V	240V	Min	Max
COOLING	Capacity	kW	10.0	10.0	10.0	-	-	-	3.0	11.5
		BTU/h	34100	34100	34100	-	-	-	10200	39200
	Current	A	1.35	1.30	1.27	12.1	11.6	11.1	-	-
	Input power	W	195	195	195	2.535k	2.535k	2.535k	-	-
		TOTAL W	-			2.730k	2.730k	2.730k	560	4.090k
	Annual consumption	TOTAL kWh *4	-			-	1365	-	-	-
	EER/EER CLASS	TOTAL (W/W) *5/ ("A"~"G")	-	-	-	3.66	3.66/A	3.66	5.36	2.81
	Erp *6 Pdesign	kW	-	-	-	-	10.0	-	-	-
	Erp *6 SEER	(W/W)	-	-	-	-	5.6	-	-	-
	Erp *6 Annual consumption	kWh	-	-	-	-	625	-	-	-
	Erp *6 Class		-	-	-	-	A+	-	-	-
	Power factor	%	-	-	-	95	95	95	-	-
	Noise indoor	dB-A (H/M/L)	38/34/31			-			-	-
		Power Level dB	60/56/53			-			-	-
	Noise outdoor	dB-A (H/L)	-			52/-			-	-
		Power Level dB	-			70/-			-	-
HEATING	Capacity	kW	10.0	10.0	10.0	-	-	-	3.0	14.0
		BTU/h	34100	34100	34100	-	-	-	10200	47800
	Current	A	1.37	1.34	1.29	10.1	9.70	9.30	-	-
	Input power	W	200	200	200	2.120k	2.120k	2.120k	-	-
		TOTAL W	-			2.320k	2.320k	2.320k	560	3.990k
	COP/COP CLASS	TOTAL (W/W) *5/ ("A"~"G")	-	-	-	4.31	4.31 /A	4.31	5.36	3.51
	Erp *6 Pdesign at -10°C	kW	-	-	-	-	10.0	-	-	-
	Erp *6 Tbivalent	°C	-	-	-	-	-10	-	-	-
	Erp *6 SCOP	(W/W)	-	-	-	-	3.8	-	-	-
	Erp *6 Annual consumption	kWh	-	-	-	-	3684	-	-	-
	Erp *6 elbu(-10°C)	kW	-	-	-	-	0.00	-	-	-
	Erp *6 Class		-	-	-	-	A	-	-	-
	Power factor	%	-	-	-	95	95	95	-	-
	Noise indoor	dB-A (H/M/L)	38/34/31			-			-	-
		Power Level dB	60/56/53			-			-	-
	Noise outdoor	dB-A (H/L)	-			52/-			-	-
		Power Level dB	-			70/-			-	-
EXTRA LOW TEMP	Total capacity(kW) / Input power(W) / COP		-						-	
Max Current(A) / Max Input power(W)			1.80/265	1.75/265	1.70/265	25.0/5.25k	25.0/5.50k	25.0/5.70k	-	
Starting current(A) (Cooling/Heating)			-	-	-	12.1/10.1	11.6/9.7	11.1/9.3	-	
Comp output(W)						2.50k	2.50k	2.50k		
Network Impedance(ΩMAX.)			-			-			-	
Fan motor output (Indoor/Outdoor) W			235			120			-	
Moisture removal volume		L/h(Pt/h)	6.0		(12.6)	-			-	
External static pressure		Pa	100 (MIN10 - MAX150)			-			-	
Indoor Air flow	Cooling	m³/min (ft³/min)	32.0/26.0/21.0 (1130)/(918)/(742)			-			-	-
Indoor Air flow	Heating	m³/min (ft³/min)	32.0/26.0/21.0 (1130)/(918)/(742)			-			-	-
Outdoor Air flow	Cooling	m³/min (ft³/min)	-			76.0 (2683)			-	-
Outdoor Air flow	Heating	m³/min (ft³/min)	-			70.0 (2472)			-	-
Refrigerant type / amount g(oz)			-			R32	2.60k	(91.7)	-	
Product dimension		Height mm(inch)	290 (11-13/32)			996 (39-7/32)			-	
		Width mm(inch)	1400 (55-1/8)			980 (38-37/64)			-	
		Depth mm(inch)	700 (27-9/16)			370 (14-9/16)			-	
Product dimension (Panel)		H×W×D mm, inch	-			-			-	
Packing dimension		Height mm(inch)	355 (13-31/32)			1134 (44-41/64)			-	
		Width mm(inch)	1614 (63-9/16)			1095 (43-7/64)			-	
		Depth mm(inch)	850 (33-15/32)			529 (20-53/64)			-	
Weight		(NET) kg(lb)	45 (99)			90 (199)			-	
		(GROSS) kg(lb)	54 (119)			98 (216)			-	
		Panel (NET) kg(lb)	-			-			-	
Layers limit (actually)			9(10)			2 (3)			-	
Operation condition		Cool (DBT)	18°C ~ 32°C			-10°C ~ 43°C			-	
		Heat (DBT)	16°C ~ 30°C			-15°C ~ 24°C			-	
MAX WORKING PRESSURE HP/LP MPa (bar)			4.15/2.55 (41.5/25.5)						-	
PIPING	Pipe diameter mm (inch)		(Liquid)Ø9.52(3/8) (Gas)Ø15.88(5/8)			(Liquid)Ø9.52(3/8) (Gas)Ø15.88(5/8)			-	
	Connecting method, Standard length m(ft)		flared type, 5.0(16.4)			flared type, 5.0(16.4)			-	
	Pipe length range m (ft)		5 ~ 50m (16.4 ~ 164.0)						-	
	Indoor unit & Outdoor unit height difference m (ft)		15m(OD located lower)/30m(OD located higher) (49.2/98.4)						-	
	Add gas amount g/m (oz/ft)		45g/m (0.484)						-	
	Pipe length for additional gas m (ft)		30m (98.4)						-	

*1 In case it is necessary to indicate the air flow volume in (l/s), the value in (m³/min.) shall be multiplied by 16.7 and rounded down the decimal point.
*2 If the EUROVENT Certified models can be operated under the "extra-low"temperature condition, -7°C dry bulb and -8°C wet-bulb temperatures with rated voltage 230V shall be used.
*3 Network Impedance shall be applicable for EUROPE and CHINA models.
*4 The annual consumption is calculated by multiplying the input power at 230V(400V) by an average of 500 hours per year in cooling mode.
*5 EER and COP classification is at 230V(400V) only in accordance with EU directive 2002/31/EC.
*6 SEER and SCOP classification is at 230V(400V) only in accordance with EN-14825. For heating, SCOP indicates the value of only Average heating season, Other fiche data indicates in an attached sheet

Single -Type

1-1. Unit Specifications

PZ2

4. Low Silhouette Ducted Type S-125PF1E5B / U-125PZ2E5

INDOOR		MODEL	S-125PF1E5B			-			-	
PANEL		MODEL	-			-			-	
OUTDOOR		MODEL	-			U-125PZ2E5			-	
Branch pipe		MODEL	-							
Performance test condition			ISO13253 / EN14511 / EN12102/ EN14825							
Power supply		Ø, Hz	1Ø 50Hz			1Ø 50Hz				
		V	220V	230V	240V	220V	230V	240V	Min	Max
COOLING	Capacity	kW	12.5	12.5	12.5	-	-	-	3.2	13.5
		BTU/h	42700	42700	42700	-	-	-	10900	46100
	Current	A	1.48	1.44	1.39	16.1	15.5	14.8	-	-
	Input power	W	215	215	215	3.335k	3.335k	3.335k	-	-
		TOTAL W	-			3.550k	3.550k	3.550k	600	4.820k
	Annual consumption	TOTAL kWh *4	-			-	1775	-	-	-
	EER/EER CLASS	TOTAL (W/W) *5/ ("A"~"G")	-	-	-	3.52	3.52 /A	3.52	5.33	2.80
	Erp *6 Pdesign	kW	-	-	-	-	12.5	-	-	-
	Erp *6 $\eta_{s,c}$	%	-	-	-	-	219.2	-	-	-
	Erp *6 Annual consumption	kWh	-	-	-	-	-	-	-	-
	Erp *6 Class		-	-	-	-	-	-	-	-
	Power factor	%	-	-	-	94	94	94	-	-
	Noise indoor	dB-A (H/M/L)	39/35/32			-			-	-
		Power Level dB	61/57/54			-			-	-
	Noise outdoor	dB-A (H/L)	-			55/-			-	-
		Power Level dB	-			73/-			-	-
HEATING	Capacity	kW	12.5	12.5	12.5	-	-	-	3.3	15.0
		BTU/h	42700	42700	42700	-	-	-	11300	51200
	Current	A	1.46	1.42	1.38	14.0	13.4	12.9	-	-
	Input power	W	210	210	210	2.900k	2.900k	2.900k	-	-
		TOTAL W	-			3.110k	3.110k	3.110k	600	4.350k
	COP/COP CLASS	TOTAL (W/W) *5/ ("A"~"G")	-	-	-	4.02	4.02 /A	4.02	5.50	3.45
	Erp *6 Pdesign at -10°C	kW	-	-	-	-	12.5	-	-	-
	Erp *6 Tbivalent	°C	-	-	-	-	-7	-	-	-
	Erp *6 $\eta_{s,h}$	%	-	-	-	-	141.5	-	-	-
	Erp *6 Annual consumption	kWh	-	-	-	-	-	-	-	-
	Erp *6 elbu(-10°C)	kW	-	-	-	-	2.30	-	-	-
	Erp *6 Class		-	-	-	-	-	-	-	-
	Power factor	%	-	-	-	94	94	94	-	-
	Noise indoor	dB-A (H/M/L)	39/35/32			-			-	-
		Power Level dB	61/57/54						-	-
	Noise outdoor	dB-A (H/L)	-			55/-			-	-
		Power Level dB	-			73/-			-	-
EXTRA LOW TEMP	Total capacity(kW) / Input power(W) / COP		-						-	
Max Current(A) / Max Input power(W)			1.80/265	1.75/265	1.70/265	29.0/6.00k	29.0/6.30k	29.0/6.60k	-	
Starting current(A) (Cooling/Heating)			-	-	-	16.1/14.0	15.5/13.4	14.8/12.9	-	
Comp output(W)			-			2.80k	2.80k	2.80k		
Network Impedance(ΩMAX.)			-			-			-	
Fan motor output (Indoor/Outdoor) W			235			120			-	
Moisture removal volume		L/h(Pt/h)	7.9		(16.6)	-			-	
External static pressure		Pa	100 (MIN10 - MAX150)			-			-	
Indoor Air flow	Cooling	m³/min (ft³/min)	34.0/29.0/23.0 (1201)/(1024)/(812)			-			-	-
Indoor Air flow	Heating	m³/min (ft³/min)	34.0/29.0/23.0 (1201)/(1024)/(812)			-			-	-
Outdoor Air flow	Cooling	m³/min (ft³/min)	-			86.0 (3037)			-	-
Outdoor Air flow	Heating	m³/min (ft³/min)	-			78.0 (2754)			-	-
Refrigerant type / amount g(oz)			-			R32	2.98k	(105.1)	-	
Product dimension		Height mm(inch)	290 (11-13/32)			996 (39-7/32)			-	
		Width mm(inch)	1400 (55-1/8)			980 (38-37/64)			-	
		Depth mm(inch)	700 (27-9/16)			370 (14-9/16)			-	
Product dimension (Panel)		H×W×D mm, inch	-			-			-	
Packing dimension		Height mm(inch)	355 (13-31/32)			1134 (44-41/64)			-	
		Width mm(inch)	1614 (63-9/16)			1095 (43-7/64)			-	
		Depth mm(inch)	850 (33-15/32)			529 (20-53/64)			-	
Weight		(NET) kg(lb)	45 (99)			94 (207)			-	
		(GROSS) kg(lb)	54 (119)			102 (224)			-	
		Panel (NET) kg(lb)	-			-			-	
Layers limit (actually)			9(10)			2 (3)			-	
Operation condition		Cool (DBT)	18°C ~ 32°C			-10°C ~ 43°C			-	
		Heat (DBT)	16°C ~ 30°C			-15°C ~ 24°C			-	
MAX WORKING PRESSURE HP/LP MPa (bar)			4.15/2.55 (41.5/25.5)							
PIPING	Pipe diameter mm (inch)		(Liquid)Ø9.52(3/8) (Gas)Ø15.88(5/8)			(Liquid)Ø9.52(3/8) (Gas)Ø15.88(5/8)			-	
	Connecting method, Standard length m(ft)		flared type, 5.0(16.4)			flared type, 5.0(16.4)			-	
	Pipe length range m (ft)		5 ~ 50m (16.4 ~ 164.0)						-	
	Indoor unit & Outdoor unit height difference m (ft)		15m(OD located lower)/30m(OD located higher) (49.2/98.4)						-	
	Add gas amount g/m (oz/ft)		45g/m (0.484)						-	
	Pipe length for additional gas m (ft)		30m (98.4)						-	

*1 In case it is necessary to indicate the air flow volume in (l/s), the value in (m³/min.) shall be multiplied by 16.7 and rounded down the decimal point.
*2 If the EUROVENT Certified models can be operated under the "extra-low"temperature condition, -7°C dry bulb and -8°C wet-bulb temperatures with rated voltage 230V shall be used.
*3 Network Impedance shall be applicable for EUROPE and CHINA models.
*4 The annual consumption is calculated by multiplying the input power at 230V(400V) by an average of 500 hours per year in cooling mode.
*5 EER and COP classification is at 230V(400V) only in accordance with EU directive 2002/31/EC.
*6 $\eta_{s,c}$ and $\eta_{s,h}$ classification is at 230V(400V) only in accordance with EN-14825. For heating, $\eta_{s,h}$ indicates the value of only Average heating season.

Single -Type

1-1. Unit Specifications

PZ2

4. Low Silhouette Ducted Type S-140PF1E5B / U-140PZ2E5

INDOOR		MODEL	S-140PF1E5B			-			-	
PANEL		MODEL	-			-			-	
OUTDOOR		MODEL	-			U-140PZ2E5			-	
Branch pipe		MODEL	-							
Performance test condition			ISO13253 / EN14511 / EN12102/ EN14825							
Power supply		Ø, Hz	1Ø 50Hz			1Ø 50Hz				
		V	220V	230V	240V	220V	230V	240V	Min	Max
COOLING	Capacity	kW	14.0	14.0	14.0	-	-	-	3.3	15.0
		BTU/h	47800	47800	47800	-	-	-	11300	51200
	Current	A	1.55	1.50	1.47	20.2	19.3	18.6	-	-
	Input power	W	225	225	225	4.175k	4.175k	4.175k	-	-
		TOTAL W	-			4.400k	4.400k	4.400k	620	5.560k
	Annual consumption	TOTAL kWh *4	-			-	2200	-	-	-
	EER/EER CLASS	TOTAL (W/W) *5/ ("A"~"G")	-	-	-	3.18	3.18/B	3.18	5.32	2.70
	Erp *6 Pdesign	kW	-	-	-	-	14.0	-	-	-
	Erp *6 $\eta_{s,c}$	%	-	-	-	-	212.3	-	-	-
	Erp *6 Annual consumption	kWh	-	-	-	-	-	-	-	-
	Erp *6 Class		-	-	-	-	-	-	-	-
	Power factor	%	-	-	-	94	94	94	-	-
	Noise indoor	dB-A (H/M/L)	40/36/33			-			-	-
		Power Level dB	62/58/55			-			-	-
	Noise outdoor	dB-A (H/L)	-			56/-			-	-
		Power Level dB	-			74/-			-	-
HEATING	Capacity	kW	14.0	14.0	14.0	-	-	-	3.4	16.0
		BTU/h	47800	47800	47800	-	-	-	11600	54600
	Current	A	1.55	1.50	1.46	16.8	16.0	15.3	-	-
	Input power	W	225	225	225	3.465k	3.465k	3.465k	-	-
		TOTAL W	-			3.690k	3.690k	3.690k	620	5.120k
	COP/COP CLASS	TOTAL (W/W) *5/ ("A"~"G")	-	-	-	3.79	3.79/A	3.79	5.48	3.13
	Erp *6 Pdesign at -10°C	kW	-	-	-	-	13.6	-	-	-
	Erp *6 Tbivalent	°C	-	-	-	-	-7	-	-	-
	Erp *6 $\eta_{s,h}$	%	-	-	-	-	138.4	-	-	-
	Erp *6 Annual consumption	kWh	-	-	-	-	-	-	-	-
	Erp *6 elbu(-10°C)	kW	-	-	-	-	2.70	-	-	-
	Erp *6 Class		-	-	-	-	-	-	-	-
	Power factor	%	-	-	-	94	94	94	-	-
	Noise indoor	dB-A (H/M/L)	40/36/33			-			-	-
		Power Level dB	62/58/55						-	-
	Noise outdoor	dB-A (H/L)	-			56/-			-	-
		Power Level dB	-			74/-			-	-
EXTRA LOW TEMP	Total capacity(kW) / Input power(W) / COP		-						-	
Max Current(A) / Max Input power(W)			1.91/285	1.86/285	1.81/285	30.0/6.25k	30.0/6.50k	30.0/6.80k	-	
Starting current(A) (Cooling/Heating)			-	-	-	20.2/16.8	19.3/16.0	18.6/15.3	-	
Comp output(W)			-			3.00k	3.00k	3.00k		
Network Impedance(ΩMAX.)			-			-			-	
Fan motor output (Indoor/Outdoor) W			235			120			-	
Moisture removal volume		L/h(Pt/h)	9.0		(18.9)	-			-	
External static pressure		Pa	100 (MIN10 - MAX150)			-			-	
Indoor Air flow	Cooling	m³/min (ft³/min)	36.0/32.0/25.0 (1271)/(1130)/(883)			-			-	-
	Heating	m³/min (ft³/min)	36.0/32.0/25.0 (1271)/(1130)/(883)			-			-	-
Outdoor Air flow	Cooling	m³/min (ft³/min)	-			89.0 (3143)			-	-
	Heating	m³/min (ft³/min)	-			83.0 (2931)			-	-
Refrigerant type / amount g(oz)			-			R32	2.98k	(105.1)	-	
Product dimension		Height mm(inch)	290 (11-13/32)			996 (39-7/32)			-	
		Width mm(inch)	1400 (55-1/8)			980 (38-37/64)			-	
		Depth mm(inch)	700 (27-9/16)			370 (14-9/16)			-	
Product dimension (Panel)		H×W×D mm, inch	-			-			-	
Packing dimension		Height mm(inch)	355 (13-31/32)			1134 (44-41/64)			-	
		Width mm(inch)	1614 (63-9/16)			1095 (43-7/64)			-	
		Depth mm(inch)	850 (33-15/32)			529 (20-53/64)			-	
Weight		(NET) kg(lb)	45 (99)			94 (207)			-	
		(GROSS) kg(lb)	54 (119)			102 (224)			-	
		Panel (NET) kg(lb)	-			-			-	
Layers limit (actually)			9(10)			2 (3)			-	
Operation condition		Cool (DBT)	18°C ~ 32°C			-10°C ~ 43°C			-	
		Heat (DBT)	16°C ~ 30°C			-15°C ~ 24°C			-	
MAX WORKING PRESSURE HP/LP MPa (bar)			4.15/2.55 (41.5/25.5)							
PIPING	Pipe diameter mm (inch)		(Liquid)Ø9.52(3/8) (Gas)Ø15.88(5/8)			(Liquid)Ø9.52(3/8) (Gas)Ø15.88(5/8)			-	
	Connecting method, Standard length m(ft)		flared type, 5.0(16.4)			flared type, 5.0(16.4)			-	
	Pipe length range m (ft)		5 ~ 50m (16.4 ~ 164.0)						-	
	Indoor unit & Outdoor unit height difference m (ft)		15m(OD located lower)/30m(OD located higher) (49.2/98.4)						-	
	Add gas amount g/m (oz/ft)		45g/m (0.484)						-	
	Pipe length for additional gas m (ft)		30m (98.4)						-	

*1 In case it is necessary to indicate the air flow volume in (l/s), the value in (m³/min.) shall be multiplied by 16.7 and rounded down the decimal point.
*2 If the EUROVENT Certified models can be operated under the "extra-low"temperature condition, -7°C dry bulb and -8°C wet-bulb temperatures with rated voltage 230V shall be used.
*3 Network Impedance shall be applicable for EUROPE and CHINA models.
*4 The annual consumption is calculated by multiplying the input power at 230V(400V) by an average of 500 hours per year in cooling mode.
*5 EER and COP classification is at 230V(400V) only in accordance with EU directive 2002/31/EC.
*6 $\eta_{s,c}$ and $\eta_{s,h}$ classification is at 230V(400V) only in accordance with EN-14825. For heating, $\eta_{s,h}$ indicates the value of only Average heating season.

Simultaneous (Twin) -Type

1-1. Unit Specifications

PZ2

4. Low Silhouette Ducted Type S-50PF1E5B×2 / U-100PZ2E8

INDOOR		MODEL	S-50PF1E5B ×2			-			-	
PANEL		MODEL	-			-			-	
OUTDOOR		MODEL	-			U-100PZ2E8			-	
Branch pipe		MODEL	CZ-P155BK1							
Performance test condition			ISO13253 / EN14511 / EN12102/ EN14825							
Power supply		Ø, Hz	1Ø 50Hz			3Ø 50Hz				
		V	220V	230V	240V	380V	400V	415V	Min	Max
COOLING	Capacity	kW	10.0	10.0	10.0	-	-	-	3.0	11.5
		BTU/h	34100	34100	34100	-	-	-	10200	39200
	Current	A	0.77×2	0.74×2	0.71×2	4.15	3.95	3.80	-	-
	Input power	W	100×2	100×2	100×2	2.535k	2.535k	2.535k	-	-
		TOTAL W	-			2.735k	2.735k	2.735k	560	4.090k
	Annual consumption	TOTAL kWh *4	-			-	1367.5	-	-	-
	EER/EER CLASS	TOTAL (W/W) *5/ ("A"~"G")	-	-	-	3.66	3.66/A	3.66	5.36	2.81
	Erp *6 Pdesign	kW	-	-	-	-	10.0	-	-	-
	Erp *6 SEER	(W/W)	-	-	-	-	5.4	-	-	-
	Erp *6 Annual consumption	kWh	-	-	-	-	648	-	-	-
	Erp *6 Class		-	-	-	-	A	-	-	-
	Power factor	%	-	-	-	93	93	93	-	-
	Noise indoor	dB-A (H/M/L)	34×2/30×2/26×2			-			-	-
		Power Level dB	56×2/52×2/48×2			-			-	-
	Noise outdoor	dB-A (H/L)	-			52/-			-	-
		Power Level dB	-			70/-			-	-
HEATING	Capacity	kW	10.0	10.0	10.0	-	-	-	3.0	14.0
		BTU/h	34100	34100	34100	-	-	-	10200	47800
	Current	A	0.77×2	0.74×2	0.71×2	3.45	3.30	3.20	-	-
	Input power	W	100×2	100×2	100×2	2.120k	2.120k	2.120k	-	-
		TOTAL W	-			2.320k	2.320k	2.320k	560	3.990k
	COP/COP CLASS	TOTAL (W/W) *5/ ("A"~"G")	-	-	-	4.31	4.31/A	4.31	5.36	3.51
	Erp *6 Pdesign at -10°C	kW	-	-	-	-	10.0	-	-	-
	Erp *6 Tbivalent	°C	-	-	-	-	-10	-	-	-
	Erp *6 SCOP	(W/W)	-	-	-	-	3.8	-	-	-
	Erp *6 Annual consumption	kWh	-	-	-	-	3684	-	-	-
	Erp *6 elbu(-10°C)	kW	-	-	-	-	0.00	-	-	-
	Erp *6 Class		-	-	-	-	A	-	-	-
	Power factor	%	-	-	-	93	93	92	-	-
	Noise indoor	dB-A (H/M/L)	34×2/30×2/26×2			-			-	-
		Power Level dB	56×2/52×2/48×2			-			-	-
	Noise outdoor	dB-A (H/L)	-			52/-			-	-
		Power Level dB	-			70/-			-	-
EXTRA LOW TEMP	Total capacity(kW) / Input power(W) / COP		-						-	
Max Current(A) / Max Input power(W)			1.00×2/125×2	0.96×2/125×2	0.92×2/125×2	9.00/5.55k	9.00/5.80k	9.00/6.05k	-	
Starting current(A) (Cooling/Heating)			-	-	-	4.15/3.45	3.95/3.30	3.80/3.20	-	
Comp output(W)						2.50k	2.50k	2.50k		
Network Impedance(ΩMAX.)			-			-			-	
Fan motor output (Indoor/Outdoor) W			119			120			-	
Moisture removal volume		L/h(Pt/h)	5.6	(2.8×2)	(11.8)	-			-	
External static pressure		Pa	70 (MIN10 - MAX150)			-			-	
Indoor Air flow	Cooling	m³/min (ft³/min)	16.0×2/15.0×2/12.0×2 (565x2)/(530×2)/(424×2)			-			-	-
Indoor Air flow	Heating	m³/min (ft³/min)	16.0×2/15.0×2/12.0×2 (565x2)/(530×2)/(424×2)			-			-	-
Outdoor Air flow	Cooling	m³/min (ft³/min)	-			76.0 (2683)			-	-
Outdoor Air flow	Heating	m³/min (ft³/min)	-			70.0 (2472)			-	-
Refrigerant type / amount g(oz)			-			R32	2.60k	(91.7)	-	
Product dimension		Height mm(inch)	290 (11-13/32)			996 (39-7/32)			-	
		Width mm(inch)	800 (31-1/2)			980 (38-37/64)			-	
		Depth mm(inch)	700 (27-9/16)			370 (14-9/16)			-	
Product dimension (Panel)		H×W×D mm, inch	-			-			-	
Packing dimension		Height mm(inch)	355 (13-31/32)			1134 (44-41/64)			-	
		Width mm(inch)	1014 (39-15/16)			1095 (43-7/64)			-	
		Depth mm(inch)	850 (33-15/32)			529 (20-53/64)			-	
Weight		(NET) kg(lb)	28 (62)			90 (199)			-	
		(GROSS) kg(lb)	35 (78)			98 (216)			-	
		Panel (NET) kg(lb)	-			-			-	
Layers limit (actually)			9(10)			2 (3)			-	
Operation condition		Cool (DBT)	18°C ~ 32°C			-10°C ~ 43°C			-	
		Heat (DBT)	16°C ~ 30°C			-15°C ~ 24°C			-	
MAX WORKING PRESSURE HP/LP MPa (bar)			4.15/2.55 (41.5/25.5)						-	
PIPING	Pipe diameter mm (inch)		(Liquid)Ø6.35(1/4) (Gas)Ø12.7(1/2)			(Liquid)Ø9.52(3/8) (Gas)Ø15.88(5/8)			-	
	Connecting method, Standard length m(ft)		flared type, 5.0(16.4)			flared type, 5.0(16.4)			-	
	Pipe length range m (ft)		5 ~ 50m (16.4 ~ 164.0)						-	
	Indoor unit & Outdoor unit height difference m (ft)		15m(OD located lower)/30m(OD located higher) (49.2/98.4)						-	
	Add gas amount g/m (oz/ft)		45g/m (0.484)						-	
	Pipe length for additional gas m (ft)		30m (98.4)						-	

*1 In case it is necessary to indicate the air flow volume in (l/s), the value in (m³/min.) shall be multiplied by 16.7 and rounded down the decimal point.
*2 If the EUROVENT Certified models can be operated under the "extra-low"temperature condition, -7°C dry bulb and -8°C wet-bulb temperatures with rated voltage 230V shall be used.
*3 Network Impedance shall be applicable for EUROPE and CHINA models.
*4 The annual consumption is calculated by multiplying the input power at 230V(400V) by an average of 500 hours per year in cooling mode.
*5 EER and COP classification is at 230V(400V) only in accordance with EU directive 2002/31/EC.
*6 SEER and SCOP classification is at 230V(400V) only in accordance with EN-14825. For heating, SCOP indicates the value of only Average heating season, Other fiche data indicates in an attached sheet

Simultaneous (Twin) -Type

1-1. Unit Specifications

PZ2

4. Low Silhouette Ducted Type S-60PF1E5B×2 / U-125PZ2E8

INDOOR		MODEL	S-60PF1E5B ×2			-			-	
PANEL		MODEL	-			-			-	
OUTDOOR		MODEL	-			U-125PZ2E8			-	
Branch pipe		MODEL	CZ-P155BK1							
Performance test condition			ISO13253 / EN14511 / EN12102/ EN14825							
Power supply		Ø, Hz	1Ø 50Hz			3Ø 50Hz				
		V	220V	230V	240V	380V	400V	415V	Min	Max
COOLING	Capacity	kW	12.5	12.5	12.5	-	-	-	3.2	13.5
		BTU/h	42700	42700	42700	-	-	-	10900	46100
	Current	A	0.91×2	0.89×2	0.87×2	5.40	5.10	4.95	-	-
	Input power	W	120×2	120×2	120×2	3.335k	3.335k	3.335k	-	-
		TOTAL W	-			3.575k	3.575k	3.575k	600	4.820k
	Annual consumption	TOTAL kWh *4	-			-	1787.5	-	-	-
	EER/EER CLASS	TOTAL (W/W) *5/ ("A"~"G")	-	-	-	3.50	3.50 /A	3.50	5.33	2.80
	Erp *6 Pdesign	kW	-	-	-	-	12.5	-	-	-
	Erp *6 $\eta_{s,c}$	%	-	-	-	-	233	-	-	-
	Erp *6 Annual consumption	kWh	-	-	-	-	-	-	-	-
	Erp *6 Class		-	-	-	-	-	-	-	-
	Power factor	%	-	-	-	94	94	94	-	-
	Noise indoor	dB-A (H/M/L)	35×2/32×2/26×2			-			-	-
		Power Level dB	57×2/54×2/48×2			-			-	-
	Noise outdoor	dB-A (H/L)	-			55/-			-	-
		Power Level dB	-			73/-			-	-
HEATING	Capacity	kW	12.5	12.5	12.5	-	-	-	3.3	15.0
		BTU/h	42700	42700	42700	-	-	-	11300	51200
	Current	A	0.91×2	0.89×2	0.87×2	4.70	4.45	4.30	-	-
	Input power	W	120×2	120×2	120×2	2.900k	2.900k	2.900k	-	-
		TOTAL W	-			3.140k	3.140k	3.140k	600	4.350k
	COP/COP CLASS	TOTAL (W/W) *5/ ("A"~"G")	-	-	-	3.98	3.98/A	3.98	5.50	3.45
	Erp *6 Pdesign at -10°C	kW	-	-	-	-	12.5	-	-	-
	Erp *6 Tbivalent	°C	-	-	-	-	-7	-	-	-
	Erp *6 $\eta_{s,h}$	%	-	-	-	-	142.7	-	-	-
	Erp *6 Annual consumption	kWh	-	-	-	-	-	-	-	-
	Erp *6 elbu(-10°C)	kW	-	-	-	-	2.30	-	-	-
	Erp *6 Class		-	-	-	-	-	-	-	-
	Power factor	%	-	-	-	94	94	94	-	-
	Noise indoor	dB-A (H/M/L)	35×2 / 32×2 / 26×2			-			-	-
		Power Level dB	57×2 / 54×2 / 48×2						-	-
	Noise outdoor	dB-A (H/L)	-			55/-			-	-
		Power Level dB	-			73/-			-	-
EXTRA LOW TEMP	Total capacity(kW) / Input power(W) / COP		-						-	
Max Current(A) / Max Input power(W)			1.26×2/160×2	1.20×2/160×2	1.15×2/160×2	10.0/6.20k	10.0/6.50k	10.0/6.75k	-	
Starting current(A) (Cooling/Heating)			-	-	-	5.40/4.70	5.10/4.45	4.95/4.30	-	
Comp output(W)			-			2.80k	2.80k	2.80k		
Network Impedance(ΩMAX.)			-			-			-	
Fan motor output (Indoor/Outdoor) W			124			120			-	
Moisture removal volume		L/h(Pt/h)	6.8	(3.4×2)	(14.3)	-			-	
External static pressure		Pa	70 (MIN10 - MAX150)			-			-	
Indoor Air flow	Cooling	m³/min (ft³/min)	21.0×2/19.0×2/15.0×2 (742x2)/(671×2)/(530×2)			-			-	-
Indoor Air flow	Heating	m³/min (ft³/min)	21.0×2/19.0×2/15.0×2 (742x2)/(671×2)/(530×2)			-			-	-
Outdoor Air flow	Cooling	m³/min (ft³/min)	-			86.0 (3037)			-	-
Outdoor Air flow	Heating	m³/min (ft³/min)	-			78.0 (2754)			-	-
Refrigerant type / amount g(oz)			-			R32	2.98k	(105.1)	-	
Product dimension		Height mm(inch)	290 (11-13/32)			996 (39-7/32)			-	
		Width mm(inch)	1000 (39-3/8)			980 (38-37/64)			-	
		Depth mm(inch)	700 (27-9/16)			370 (14-9/16)			-	
Product dimension (Panel)		H×W×D mm, inch	-			-			-	
Packing dimension		Height mm(inch)	355 (13-31/32)			1134 (44-41/64)			-	
		Width mm(inch)	1214 (47-13/16)			1095 (43-7/64)			-	
		Depth mm(inch)	850 (33-15/32)			529 (20-53/64)			-	
Weight		(NET) kg(lb)	33 (73)			94 (207)			-	
		(GROSS) kg(lb)	41 (91)			102 (224)			-	
		Panel (NET) kg(lb)	-			-			-	
Layers limit (actually)			9(10)			2 (3)			-	
Operation condition		Cool (DBT)	18°C ~ 32°C			-10°C ~ 43°C			-	
		Heat (DBT)	16°C ~ 30°C			-15°C ~ 24°C			-	
MAX WORKING PRESSURE HP/LP MPa (bar)			4.15/2.55 (41.5/25.5)							
PIPING	Pipe diameter mm (inch)		(Liquid)Ø9.52(3/8) (Gas)Ø15.88(5/8)			(Liquid)Ø9.52(3/8) (Gas)Ø15.88(5/8)			-	
	Connecting method, Standard length m(ft)		flared type, 5.0(16.4)			flared type, 5.0(16.4)			-	
	Pipe length range m (ft)		5 ~ 50m (16.4 ~ 164.0)						-	
	Indoor unit & Outdoor unit height difference m (ft)		15m(OD located lower)/30m(OD located higher) (49.2/98.4)						-	
	Add gas amount g/m (oz/ft)		45g/m (0.484)						-	
	Pipe length for additional gas m (ft)		30m (98.4)						-	

*1 In case it is necessary to indicate the air flow volume in (l/s), the value in (m³/min.) shall be multiplied by 16.7 and rounded down the decimal point.
*2 If the EUROVENT Certified models can be operated under the "extra-low"temperature condition, -7°C dry bulb and -8°C wet-bulb temperatures with rated voltage 230V shall be used.
*3 Network Impedance shall be applicable for EUROPE and CHINA models.
*4 The annual consumption is calculated by multiplying the input power at 230V(400V) by an average of 500 hours per year in cooling mode.
*5 EER and COP classification is at 230V(400V) only in accordance with EU directive 2002/31/EC.
*6 $\eta_{s,c}$ and $\eta_{s,h}$ classification is at 230V(400V) only in accordance with EN-14825. For heating, $\eta_{s,h}$ indicates the value of only Average heating season.

Simultaneous (Twin) -Type

1-1. Unit Specifications

PZ2

4. Low Silhouette Ducted Type S-71PF1E5B×2 / U-140PZ2E8

INDOOR		MODEL	S-71PF1E5B ×2			-			-	
PANEL		MODEL	-			-			-	
OUTDOOR		MODEL	-			U-140PZ2E8			-	
Branch pipe		MODEL	CZ-P155BK1							
Performance test condition			ISO13253 / EN14511 / EN12102/ EN14825							
Power supply		Ø, Hz	1Ø 50Hz			3Ø 50Hz				
		V	220V	230V	240V	380V	400V	415V	Min	Max
COOLING	Capacity	kW	14.0	14.0	14.0	-	-	-	3.3	15.0
		BTU/h	47800	47800	47800	-	-	-	11300	51200
	Current	A	0.91×2	0.89×2	0.87×2	6.75	6.40	6.15	-	-
	Input power	W	120×2	120×2	120×2	4.175k	4.175k	4.175k	-	-
		TOTAL W	-			4.415k	4.415k	4.415k	620	5.560k
	Annual consumption	TOTAL kWh *4	-			-	2207.5	-	-	-
	EER/EER CLASS	TOTAL (W/W) *5/ ("A"~"G")	-	-	-	3.17	3.17/B	3.17	5.32	2.70
	Erp *6 Pdesign	kW	-	-	-	-	14.0	-	-	-
	Erp *6 $\eta_{s,c}$	%	-	-	-	-	221.7	-	-	-
	Erp *6 Annual consumption	kWh	-	-	-	-	-	-	-	-
	Erp *6 Class		-	-	-	-	-	-	-	-
	Power factor	%	-	-	-	94	94	94	-	-
	Noise indoor	dB-A (H/M/L)	35×2/32×2/26×2			-			-	-
		Power Level dB	57×2/54×2/48×2			-			-	-
	Noise outdoor	dB-A (H/L)	-			56/-			-	-
		Power Level dB	-			74/-			-	-
HEATING	Capacity	kW	14.0	14.0	14.0	-	-	-	3.4	16.0
		BTU/h	47800	47800	47800	-	-	-	11600	54600
	Current	A	0.91×2	0.89×2	0.87×2	5.60	5.30	5.15	-	-
	Input power	W	120×2	120×2	120×2	3.465k	3.465k	3.465k	-	-
		TOTAL W	-			3.705k	3.705k	3.705k	620	5.120k
	COP/COP CLASS	TOTAL (W/W) *5/ ("A"~"G")	-	-	-	3.78	3.78 /A	3.78	5.48	3.13
	Erp *6 Pdesign at -10°C	kW	-	-	-	-	13.6	-	-	-
	Erp *6 Tbivalent	°C	-	-	-	-	-7	-	-	-
	Erp *6 $\eta_{s,h}$	%	-	-	-	-	139.4	-	-	-
	Erp *6 Annual consumption	kWh	-	-	-	-	-	-	-	-
	Erp *6 elbu(-10°C)	kW	-	-	-	-	2.70	-	-	-
	Erp *6 Class		-	-	-	-	-	-	-	-
	Power factor	%	-	-	-	94	94	94	-	-
	Noise indoor	dB-A (H/M/L)	35×2 / 32×2 / 26×2			-			-	-
		Power Level dB	57×2 / 54×2 / 48×2						-	-
	Noise outdoor	dB-A (H/L)	-			56/-			-	-
		Power Level dB	-			74/-			-	-
EXTRA LOW TEMP	Total capacity(kW) / Input power(W) / COP		-						-	
Max Current(A) / Max Input power(W)			1.26×2/160×2	1.20×2/160×2	1.15×2/160×2	10.5/6.50k	10.5/6.85k	10.5/7.10k	-	
Starting current(A) (Cooling/Heating)			-	-	-	6.75/5.60	6.40/5.30	6.15/5.15	-	
Comp output(W)			-			3.00k	3.00k	3.00k		
Network Impedance(ΩMAX.)			-			-			-	
Fan motor output (Indoor/Outdoor) W			124			120			-	
Moisture removal volume		L/h(Pt/h)	8.4	(4.2×2)	(17.6)	-			-	
External static pressure		Pa	70 (MIN10 - MAX150)			-			-	
Indoor Air flow	Cooling	m³/min (ft³/min)	21.0×2/19.0×2/15.0×2 (742x2)/(671×2)/(530×2)			-			-	-
Indoor Air flow	Heating	m³/min (ft³/min)	21.0×2/19.0×2/15.0×2 (742x2)/(671×2)/(530×2)			-			-	-
Outdoor Air flow	Cooling	m³/min (ft³/min)	-			89.0 (3143)			-	-
Outdoor Air flow	Heating	m³/min (ft³/min)	-			83.0 (2931)			-	-
Refrigerant type / amount g(oz)			-			R32	2.98k	(105.1)	-	
Product dimension		Height mm(inch)	290 (11-13/32)			996 (39-7/32)			-	
		Width mm(inch)	1000 (39-3/8)			980 (38-37/64)			-	
		Depth mm(inch)	700 (27-9/16)			370 (14-9/16)			-	
Product dimension (Panel)		H×W×D mm, inch	-			-			-	
Packing dimension		Height mm(inch)	355 (13-31/32)			1134 (44-41/64)			-	
		Width mm(inch)	1214 (47-13/16)			1095 (43-7/64)			-	
		Depth mm(inch)	850 (33-15/32)			529 (20-53/64)			-	
Weight		(NET) kg(lb)	33 (73)			94 (207)			-	
		(GROSS) kg(lb)	41 (91)			102 (224)			-	
		Panel (NET) kg(lb)	-			-			-	
Layers limit (actually)			9(10)			2 (3)			-	
Operation condition		Cool (DBT)	18°C ~ 32°C			-10°C ~ 43°C			-	
		Heat (DBT)	16°C ~ 30°C			-15°C ~ 24°C			-	
MAX WORKING PRESSURE HP/LP MPa (bar)			4.15/2.55 (41.5/25.5)							
PIPING	Pipe diameter mm (inch)		(Liquid)Ø9.52(3/8) (Gas)Ø15.88(5/8)			(Liquid)Ø9.52(3/8) (Gas)Ø15.88(5/8)			-	
	Connecting method, Standard length m(ft)		flared type, 5.0(16.4)			flared type, 5.0(16.4)			-	
	Pipe length range m (ft)		5 ~ 50m (16.4 ~ 164.0)						-	
	Indoor unit & Outdoor unit height difference m (ft)		15m(OD located lower)/30m(OD located higher) (49.2/98.4)						-	
	Add gas amount g/m (oz/ft)		45g/m (0.484)						-	
	Pipe length for additional gas m (ft)		30m (98.4)						-	

*1 In case it is necessary to indicate the air flow volume in (l/s), the value in (m³/min.) shall be multiplied by 16.7 and rounded down the decimal point.
*2 If the EUROVENT Certified models can be operated under the "extra-low"temperature condition, -7°C dry bulb and -8°C wet-bulb temperatures with rated voltage 230V shall be used.
*3 Network Impedance shall be applicable for EUROPE and CHINA models.
*4 The annual consumption is calculated by multiplying the input power at 230V(400V) by an average of 500 hours per year in cooling mode.
*5 EER and COP classification is at 230V(400V) only in accordance with EU directive 2002/31/EC.
*6 $\eta_{s,c}$ and $\eta_{s,h}$ classification is at 230V(400V) only in accordance with EN-14825. For heating, $\eta_{s,h}$ indicates the value of only Average heating season.

Single -Type

1-1. Unit Specifications

PZ2

4. Low Silhouette Ducted Type S-100PF1E5B / U-100PZ2E8

INDOOR		MODEL	S-100PF1E5B			-			-	
PANEL		MODEL	-			-			-	
OUTDOOR		MODEL	-			U-100PZ2E8			-	
Branch pipe		MODEL	-							
Performance test condition			ISO13253 / EN14511 / EN12102/ EN14825							
Power supply		Ø, Hz	1Ø 50Hz			3Ø 50Hz				
		V	220V	230V	240V	380V	400V	415V	Min	Max
COOLING	Capacity	kW	10.0	10.0	10.0	-	-	-	3.0	11.5
		BTU/h	34100	34100	34100	-	-	-	10200	39200
	Current	A	1.35	1.30	1.27	4.15	3.95	3.80	-	-
	Input power	W	195	195	195	2.535k	2.535k	2.535k	-	-
		TOTAL W	-			2.730k	2.730k	2.730k	560	4.090k
	Annual consumption	TOTAL kWh *4	-			-	1365	-	-	-
	EER/EER CLASS	TOTAL (W/W) *5/ ("A"~"G")	-	-	-	3.66	3.66/A	3.66	5.36	2.81
	Erp *6 Pdesign	kW	-	-	-	-	10.0	-	-	-
	Erp *6 SEER	(W/W)	-	-	-	-	5.6	-	-	-
	Erp *6 Annual consumption	kWh	-	-	-	-	625	-	-	-
	Erp *6 Class		-	-	-	-	A+	-	-	-
	Power factor	%	-	-	-	93	93	93	-	-
	Noise indoor	dB-A (H/M/L)	38/34/31			-			-	-
		Power Level dB	60/56/53			-			-	-
	Noise outdoor	dB-A (H/L)	-			52/-			-	-
		Power Level dB	-			70/-			-	-
HEATING	Capacity	kW	10.0	10.0	10.0	-	-	-	3.0	14.0
		BTU/h	34100	34100	34100	-	-	-	10200	47800
	Current	A	1.37	1.34	1.29	3.45	3.30	3.20	-	-
	Input power	W	200	200	200	2.120k	2.120k	2.120k	-	-
		TOTAL W	-			2.320k	2.320k	2.320k	560	3.990k
	COP/COP CLASS	TOTAL (W/W) *5/ ("A"~"G")	-	-	-	4.31	4.31/A	4.31	5.36	3.51
	Erp *6 Pdesign at -10°C	kW	-	-	-	-	10.0	-	-	-
	Erp *6 Tbivalent	°C	-	-	-	-	-10	-	-	-
	Erp *6 SCOP	(W/W)	-	-	-	-	3.8	-	-	-
	Erp *6 Annual consumption	kWh	-	-	-	-	3684	-	-	-
	Erp *6 elbu(-10°C)	kW	-	-	-	-	0.00	-	-	-
	Erp *6 Class		-	-	-	-	A	-	-	-
	Power factor	%	-	-	-	93	93	92	-	-
	Noise indoor	dB-A (H/M/L)	38/34/31			-			-	-
		Power Level dB	60/56/53			-			-	-
	Noise outdoor	dB-A (H/L)	-			52/-			-	-
		Power Level dB	-			70/-			-	-
EXTRA LOW TEMP	Total capacity(kW) / Input power(W) / COP		-						-	
Max Current(A) / Max Input power(W)			1.80/265	1.75/265	1.70/265	9.00/5.55k	9.00/5.80k	9.00/6.05k	-	
Starting current(A) (Cooling/Heating)			-	-	-	4.15/3.45	3.95/3.30	3.80/3.20	-	
Comp output(W)						2.50k	2.50k	2.50k		
Network Impedance(ΩMAX.)			-			-			-	
Fan motor output (Indoor/Outdoor) W			235			120			-	
Moisture removal volume		L/h(Pt/h)	6.0		(12.6)	-			-	
External static pressure		Pa	100 (MIN10 - MAX150)			-			-	
Indoor Air flow	Cooling	m³/min (ft³/min)	32.0/26.0/21.0 (1130)/(918)/(742)			-			-	-
Indoor Air flow	Heating	m³/min (ft³/min)	32.0/26.0/21.0 (1130)/(918)/(742)			-			-	-
Outdoor Air flow	Cooling	m³/min (ft³/min)	-			76.0 (2683)			-	-
Outdoor Air flow	Heating	m³/min (ft³/min)	-			70.0 (2472)			-	-
Refrigerant type / amount g(oz)			-			R32	2.60k	(91.7)	-	
Product dimension		Height mm(inch)	290 (11-13/32)			996 (39-7/32)			-	
		Width mm(inch)	1400 (55-1/8)			980 (38-37/64)			-	
		Depth mm(inch)	700 (27-9/16)			370 (14-9/16)			-	
Product dimension (Panel)		H×W×D mm, inch	-			-			-	
Packing dimension		Height mm(inch)	355 (13-31/32)			1134 (44-41/64)			-	
		Width mm(inch)	1614 (63-9/16)			1095 (43-7/64)			-	
		Depth mm(inch)	850 (33-15/32)			529 (20-53/64)			-	
Weight		(NET) kg(lb)	45 (99)			90 (199)			-	
		(GROSS) kg(lb)	54 (119)			98 (216)			-	
		Panel (NET) kg(lb)	-			-			-	
Layers limit (actually)			9(10)			2 (3)			-	
Operation condition		Cool (DBT)	18°C ~ 32°C			-10°C ~ 43°C			-	
		Heat (DBT)	16°C ~ 30°C			-15°C ~ 24°C			-	
MAX WORKING PRESSURE HP/LP MPa (bar)			4.15/2.55 (41.5/25.5)						-	
PIPING	Pipe diameter mm (inch)		(Liquid)Ø9.52(3/8) (Gas)Ø15.88(5/8)			(Liquid)Ø9.52(3/8) (Gas)Ø15.88(5/8)			-	
	Connecting method, Standard length m(ft)		flared type, 5.0(16.4)			flared type, 5.0(16.4)			-	
	Pipe length range m (ft)		5 ~ 50m (16.4 ~ 164.0)						-	
	Indoor unit & Outdoor unit height difference m (ft)		15m(OD located lower)/30m(OD located higher) (49.2/98.4)						-	
	Add gas amount g/m (oz/ft)		45g/m (0.484)						-	
	Pipe length for additional gas m (ft)		30m (98.4)						-	

*1 In case it is necessary to indicate the air flow volume in (l/s), the value in (m³/min.) shall be multiplied by 16.7 and rounded down the decimal point.
*2 If the EUROVENT Certified models can be operated under the "extra-low"temperature condition, -7°C dry bulb and -8°C wet-bulb temperatures with rated voltage 230V shall be used.
*3 Network Impedance shall be applicable for EUROPE and CHINA models.
*4 The annual consumption is calculated by multiplying the input power at 230V(400V) by an average of 500 hours per year in cooling mode.
*5 EER and COP classification is at 230V(400V) only in accordance with EU directive 2002/31/EC.
*6 SEER and SCOP classification is at 230V(400V) only in accordance with EN-14825. For heating, SCOP indicates the value of only Average heating season, Other fiche data indicates in an attached sheet

Single -Type

1-1. Unit Specifications

PZ2

4. Low Silhouette Ducted Type S-125PF1E5B / U-125PZ2E8

INDOOR		MODEL	S-125PF1E5B			-			-	
PANEL		MODEL	-			-			-	
OUTDOOR		MODEL	-			U-125PZ2E8			-	
Branch pipe		MODEL	-							
Performance test condition			ISO13253 / EN14511 / EN12102/ EN14825							
Power supply		Ø, Hz	1Ø 50Hz			3Ø 50Hz				
		V	220V	230V	240V	380V	400V	415V	Min	Max
COOLING	Capacity	kW	12.5	12.5	12.5	-	-	-	3.2	13.5
		BTU/h	42700	42700	42700	-	-	-	10900	46100
	Current	A	1.48	1.44	1.39	5.40	5.10	4.95	-	-
	Input power	W	215	215	215	3.335k	3.335k	3.335k	-	-
		TOTAL W	-			3.550k	3.550k	3.550k	600	4.820k
	Annual consumption	TOTAL kWh *4	-			-	1775	-	-	-
	EER/EER CLASS	TOTAL (W/W) *5/ ("A"~"G")	-	-	-	3.52	3.52/A	3.52	5.33	2.80
	Erp *6 Pdesign	kW	-	-	-	-	12.5	-	-	-
	Erp *6 $\eta_{s,c}$	%	-	-	-	-	218.5	-	-	-
	Erp *6 Annual consumption	kWh	-	-	-	-	-	-	-	-
	Erp *6 Class		-	-	-	-	-	-	-	-
	Power factor	%	-	-	-	94	94	94	-	-
	Noise indoor	dB-A (H/M/L)	39/35/32			-			-	-
		Power Level dB	61/57/54			-			-	-
	Noise outdoor	dB-A (H/L)	-			55/-			-	-
		Power Level dB	-			73/-			-	-
HEATING	Capacity	kW	12.5	12.5	12.5	-	-	-	3.3	15.0
		BTU/h	42700	42700	42700	-	-	-	11300	51200
	Current	A	1.46	1.42	1.38	4.70	4.45	4.30	-	-
	Input power	W	210	210	210	2.900k	2.900k	2.900k	-	-
		TOTAL W	-			3.110k	3.110k	3.110k	600	4.350k
	COP/COP CLASS	TOTAL (W/W) *5/ ("A"~"G")	-	-	-	4.02	4.02 /A	4.02	5.50	3.45
	Erp *6 Pdesign at -10°C	kW	-	-	-	-	12.5	-	-	-
	Erp *6 Tbivalent	°C	-	-	-	-	-7	-	-	-
	Erp *6 $\eta_{s,h}$	%	-	-	-	-	141.5	-	-	-
	Erp *6 Annual consumption	kWh	-	-	-	-	-	-	-	-
	Erp *6 elbu(-10°C)	kW	-	-	-	-	2.30	-	-	-
	Erp *6 Class		-	-	-	-	-	-	-	-
	Power factor	%	-	-	-	94	94	94	-	-
	Noise indoor	dB-A (H/M/L)	39/35/32			-			-	-
		Power Level dB	61/57/54						-	-
	Noise outdoor	dB-A (H/L)	-			55/-			-	-
		Power Level dB	-			73/-			-	-
EXTRA LOW TEMP	Total capacity(kW) / Input power(W) / COP		-						-	
Max Current(A) / Max Input power(W)			1.80/265	1.75/265	1.70/265	10.0/6.20k	10.0/6.50k	10.0/6.75k	-	
Starting current(A) (Cooling/Heating)			-	-	-	5.40/4.70	5.10/4.45	4.95/4.30	-	
Comp output(W)			-			2.80k	2.80k	2.80k		
Network Impedance(ΩMAX.)			-			-			-	
Fan motor output (Indoor/Outdoor) W			235			120			-	
Moisture removal volume		L/h(Pt/h)	7.9		(16.6)	-			-	
External static pressure		Pa	100 (MIN10 - MAX150)			-			-	
Indoor Air flow	Cooling	m³/min (ft³/min)	34.0/29.0/23.0 (1201)/(1024)/(812)			-			-	-
Indoor Air flow	Heating	m³/min (ft³/min)	34.0/29.0/23.0 (1201)/(1024)/(812)			-			-	-
Outdoor Air flow	Cooling	m³/min (ft³/min)	-			86.0 (3037)			-	-
Outdoor Air flow	Heating	m³/min (ft³/min)	-			78.0 (2754)			-	-
Refrigerant type / amount g(oz)			-			R32	2.98k	(105.1)	-	
Product dimension		Height mm(inch)	290 (11-13/32)			996 (39-7/32)			-	
		Width mm(inch)	1400 (55-1/8)			980 (38-37/64)			-	
		Depth mm(inch)	700 (27-9/16)			370 (14-9/16)			-	
Product dimension (Panel)		H×W×D mm, inch	-			-			-	
Packing dimension		Height mm(inch)	355 (13-31/32)			1134 (44-41/64)			-	
		Width mm(inch)	1614 (63-9/16)			1095 (43-7/64)			-	
		Depth mm(inch)	850 (33-15/32)			529 (20-53/64)			-	
Weight		(NET) kg(lb)	45 (99)			94 (207)			-	
		(GROSS) kg(lb)	54 (119)			102 (224)			-	
		Panel (NET) kg(lb)	-			-			-	
Layers limit (actually)			9(10)			2 (3)			-	
Operation condition		Cool (DBT)	18°C ~ 32°C			-10°C ~ 43°C			-	
		Heat (DBT)	16°C ~ 30°C			-15°C ~ 24°C			-	
MAX WORKING PRESSURE HP/LP MPa (bar)			4.15/2.55 (41.5/25.5)							
PIPING	Pipe diameter mm (inch)		(Liquid)Ø9.52(3/8) (Gas)Ø15.88(5/8)			(Liquid)Ø9.52(3/8) (Gas)Ø15.88(5/8)			-	
	Connecting method, Standard length m(ft)		flared type, 5.0(16.4)			flared type, 5.0(16.4)			-	
	Pipe length range m (ft)		5 ~ 50m (16.4 ~ 164.0)						-	
	Indoor unit & Outdoor unit height difference m (ft)		15m(OD located lower)/30m(OD located higher) (49.2/98.4)						-	
	Add gas amount g/m (oz/ft)		45g/m (0.484)						-	
	Pipe length for additional gas m (ft)		30m (98.4)						-	

*1 In case it is necessary to indicate the air flow volume in (l/s), the value in (m³/min.) shall be multiplied by 16.7 and rounded down the decimal point.
*2 If the EUROVENT Certified models can be operated under the "extra-low"temperature condition, -7°C dry bulb and -8°C wet-bulb temperatures with rated voltage 230V shall be used.
*3 Network Impedance shall be applicable for EUROPE and CHINA models.
*4 The annual consumption is calculated by multiplying the input power at 230V(400V) by an average of 500 hours per year in cooling mode.
*5 EER and COP classification is at 230V(400V) only in accordance with EU directive 2002/31/EC.
*6 $\eta_{s,c}$ and $\eta_{s,h}$ classification is at 230V(400V) only in accordance with EN-14825. For heating, $\eta_{s,h}$ indicates the value of only Average heating season.

Single -Type

1-1. Unit Specifications

PZ2

4. Low Silhouette Ducted Type S-140PF1E5B / U-140PZ2E8

INDOOR		MODEL	S-140PF1E5B			-			-	
PANEL		MODEL	-			-			-	
OUTDOOR		MODEL	-			U-140PZ2E8			-	
Branch pipe		MODEL	-							
Performance test condition			ISO13253 / EN14511 / EN12102/ EN14825							
Power supply		Ø, Hz	1Ø 50Hz			3Ø 50Hz				
		V	220V	230V	240V	380V	400V	415V	Min	Max
COOLING	Capacity	kW	14.0	14.0	14.0	-	-	-	3.3	15.0
		BTU/h	47800	47800	47800	-	-	-	11300	51200
	Current	A	1.55	1.50	1.47	6.75	6.40	6.15	-	-
	Input power	W	225	225	225	4.175k	4.175k	4.175k	-	-
		TOTAL W	-			4.400k	4.400k	4.400k	620	5.560k
	Annual consumption	TOTAL kWh *4	-			-	2200	-	-	-
	EER/EER CLASS	TOTAL (W/W) *5/ ("A"~"G")	-	-	-	3.18	3.18 /B	3.18	5.32	2.70
	Erp *6 Pdesign	kW	-	-	-	-	14.0	-	-	-
	Erp *6 $\eta_{s,c}$	%	-	-	-	-	211.8	-	-	-
	Erp *6 Annual consumption	kWh	-	-	-	-	-	-	-	-
	Erp *6 Class		-	-	-	-	-	-	-	-
	Power factor	%	-	-	-	94	94	94	-	-
	Noise indoor	dB-A (H/M/L)	40/36/33			-			-	-
		Power Level dB	62/58/55			-			-	-
	Noise outdoor	dB-A (H/L)	-			56/-			-	-
		Power Level dB	-			74/-			-	-
HEATING	Capacity	kW	14.0	14.0	14.0	-	-	-	3.4	16.0
		BTU/h	47800	47800	47800	-	-	-	11600	54600
	Current	A	1.55	1.50	1.46	5.60	5.30	5.15	-	-
	Input power	W	225	225	225	3.465k	3.465k	3.465k	-	-
		TOTAL W	-			3.690k	3.690k	3.690k	620	5.120k
	COP/COP CLASS	TOTAL (W/W) *5/ ("A"~"G")	-	-	-	3.79	3.79 /A	3.79	5.48	3.13
	Erp *6 Pdesign at -10°C	kW	-	-	-	-	13.6	-	-	-
	Erp *6 Tbivalent	°C	-	-	-	-	-7	-	-	-
	Erp *6 $\eta_{s,h}$	%	-	-	-	-	138.4	-	-	-
	Erp *6 Annual consumption	kWh	-	-	-	-	-	-	-	-
	Erp *6 elbu(-10°C)	kW	-	-	-	-	2.70	-	-	-
	Erp *6 Class		-	-	-	-	-	-	-	-
	Power factor	%	-	-	-	94	94	94	-	-
	Noise indoor	dB-A (H/M/L)	40/36/33			-			-	-
		Power Level dB	62/58/55						-	-
	Noise outdoor	dB-A (H/L)	-			56/-			-	-
		Power Level dB	-			74/-			-	-
EXTRA LOW TEMP	Total capacity(kW) / Input power(W) / COP		-						-	
Max Current(A) / Max Input power(W)			1.91/285	1.86/285	1.81/285	10.5/6.50k	10.5/6.85k	10.5/7.10k	-	
Starting current(A) (Cooling/Heating)			-	-	-	6.75/5.60	6.40/5.30	6.15/5.15	-	
Comp output(W)			-			3.00k	3.00k	3.00k		
Network Impedance(ΩMAX.)			-			-			-	
Fan motor output (Indoor/Outdoor) W			235			120			-	
Moisture removal volume		L/h(Pt/h)	9.0		(18.9)	-			-	
External static pressure		Pa	100 (MIN10 - MAX150)			-			-	
Indoor Air flow	Cooling	m³/min (ft³/min)	36.0/32.0 25.0 (1271)/(1130)/(883)			-			-	-
Indoor Air flow	Heating	m³/min (ft³/min)	36.0/32.0 25.0 (1271)/(1130)/(883)			-			-	-
Outdoor Air flow	Cooling	m³/min (ft³/min)	-			89.0 (3143)			-	-
Outdoor Air flow	Heating	m³/min (ft³/min)	-			83.0 (2931)			-	-
Refrigerant type / amount g(oz)			-			R32 2.98k (105.1)			-	
Product dimension		Height mm(inch)	290 (11-13/32)			996 (39-7/32)			-	
		Width mm(inch)	1400 (55-1/8)			980 (38-37/64)			-	
		Depth mm(inch)	700 (27-9/16)			370 (14-9/16)			-	
Product dimension (Panel)		H×W×D mm, inch	-			-			-	
Packing dimension		Height mm(inch)	355 (13-31/32)			1134 (44-41/64)			-	
		Width mm(inch)	1614 (63-9/16)			1095 (43-7/64)			-	
		Depth mm(inch)	850 (33-15/32)			529 (20-53/64)			-	
Weight		(NET) kg(lb)	45 (99)			94 (207)			-	
		(GROSS) kg(lb)	54 (119)			102 (224)			-	
		Panel (NET) kg(lb)	-			-			-	
Layers limit (actually)			9(10)			2 (3)			-	
Operation condition		Cool (DBT)	18°C ~ 32°C			-10°C ~ 43°C			-	
		Heat (DBT)	16°C ~ 30°C			-15°C ~ 24°C			-	
MAX WORKING PRESSURE HP/LP MPa (bar)			4.15/2.55 (41.5/25.5)							
PIPING	Pipe diameter mm (inch)		(Liquid)Ø9.52(3/8) (Gas)Ø15.88(5/8)			(Liquid)Ø9.52(3/8) (Gas)Ø15.88(5/8)			-	
	Connecting method, Standard length m(ft)		flared type, 5.0(16.4)			flared type, 5.0(16.4)			-	
	Pipe length range m (ft)		5 ~ 50m (16.4 ~ 164.0)						-	
	Indoor unit & Outdoor unit height difference m (ft)		15m(OD located lower)/30m(OD located higher) (49.2/98.4)						-	
	Add gas amount g/m (oz/ft)		45g/m (0.484)						-	
	Pipe length for additional gas m (ft)		30m (98.4)						-	

*1 In case it is necessary to indicate the air flow volume in (l/s), the value in (m³/min.) shall be multiplied by 16.7 and rounded down the decimal point.
*2 If the EUROVENT Certified models can be operated under the "extra-low"temperature condition, -7°C dry bulb and -8°C wet-bulb temperatures with rated voltage 230V shall be used.
*3 Network Impedance shall be applicable for EUROPE and CHINA models.
*4 The annual consumption is calculated by multiplying the input power at 230V(400V) by an average of 500 hours per year in cooling mode.
*5 EER and COP classification is at 230V(400V) only in accordance with EU directive 2002/31/EC.
*6 $\eta_{s,c}$ and $\eta_{s,h}$ classification is at 230V(400V) only in accordance with EN-14825. For heating, $\eta_{s,h}$ indicates the value of only Average heating season.

1-2. Dimensional Data

(A) Indoor Units: S-50PU2E5B / S-60PU2E5B / S-71PU2E5B

unit: mm

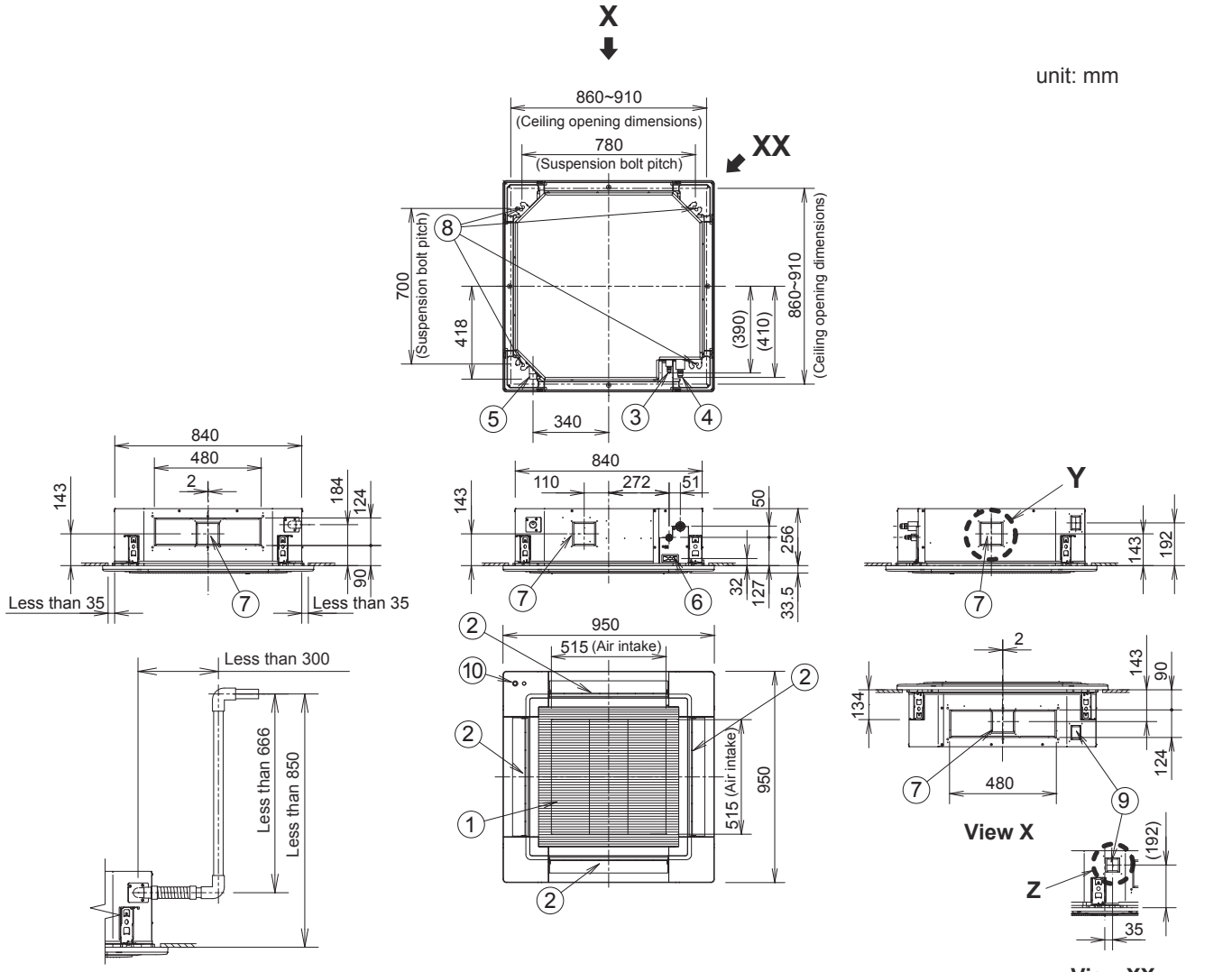

Raise dimension of drain tube

The length of the suspension bolts should be selected so that there is a gap of 30 mm or more below the lower surface of the ceiling (18 mm or more below the lower surface of the main unit), as shown in the figure at right. If the suspension bolt is too long, it will contact the ceiling panel and the unit cannot be installed.

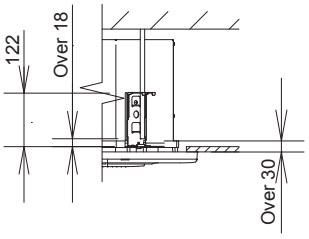

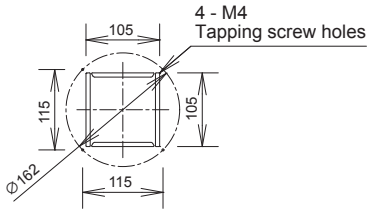

Detailed view Y

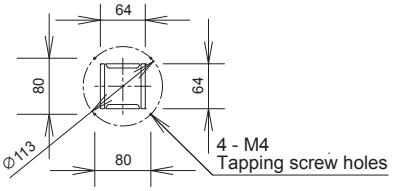

Detailed view Z

①	Air intake
②	Discharge outlet
③	Refrigerant tubing (liquid tube) 50 type ø6.35 (flared), 60 • 71 type ø9.52 (flared)
④	Refrigerant tubing (gas tube) 50 type ø12.7 (flared), 60 • 71 type ø15.88 (flared)
⑤	Drain tube connection port VP25 (outer dia. ø32)
⑥	Power supply port
⑦	Discharge duct connection port (ø150)
⑧	Suspension bolt hole (4-12×30 elongated hole)
⑨	Fresh air intake duct connection port (ø100) *
⑩	ECONAVI sensor (Only CZ-KPU3A)

* Necessary to attach duct connecting flange(field supplyed).

<Filter dimension>

520 x 520 x 15

1-2. Dimensional Data

(A) Indoor Units: S-100PU2E5B / S-125PU2E5B / S-140PU2E5B

unit: mm

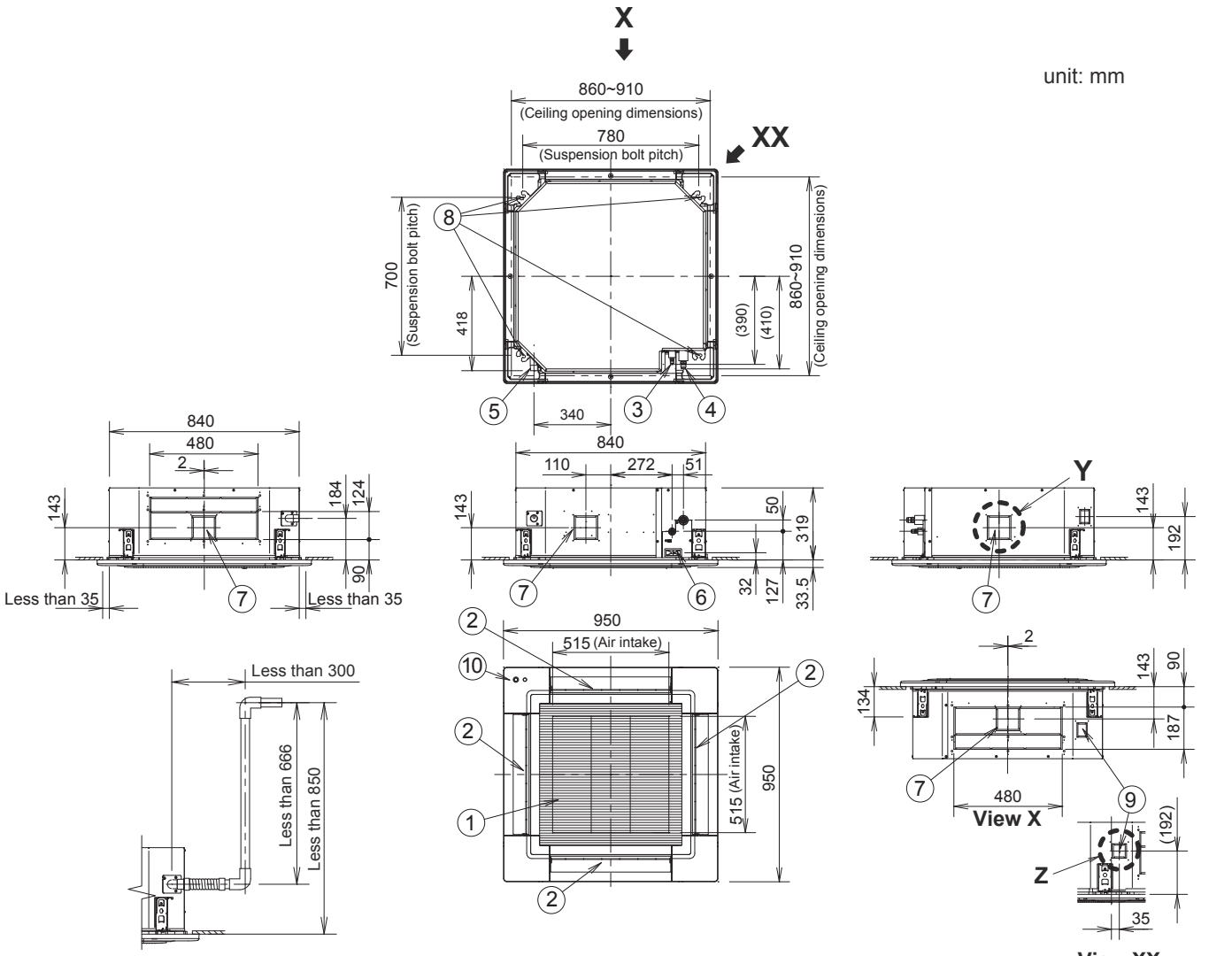

Raise dimension of drain tube

The length of the suspension bolts should be selected so that there is a gap of 30 mm or more below the lower surface of the ceiling (18 mm or more below the lower surface of the main unit), as shown in the figure at right. If the suspension bolt is too long, it will contact the ceiling panel and the unit cannot be installed.

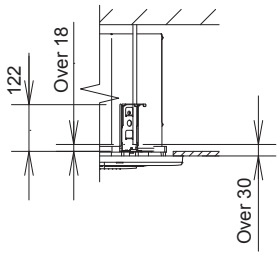

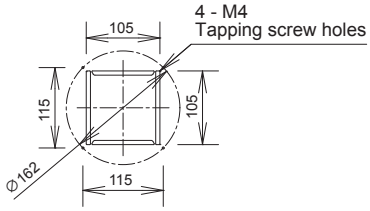

Detailed view Y

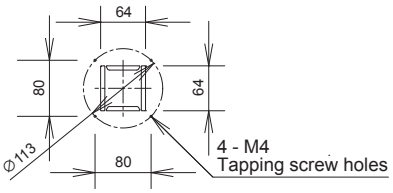

Detailed view Z

①	Air intake
②	Discharge outlet
③	Refrigerant tubing (liquid tube) ø9.52 (flared)
④	Refrigerant tubing (gas tube) ø15.88 (flared)
⑤	Drain tube connection port VP25 (outer dia. ø32)
⑥	Power supply port
⑦	Discharge duct connection port (ø150)
⑧	Suspension bolt hole (4-12×30 elongated hole)
⑨	Fresh air intake duct connection port (ø100) *
⑩	ECONAVI sensor (Only CZ-KPU3A)

* Necessary to attach duct connecting flange(field supplyed).

<Filter dimension>

520 x 520 x 15

1-2. Dimensional Data

(A) Indoor Units: S-50PT2E5B

unit :mm

Detailed view of intaking outside air duct connection port

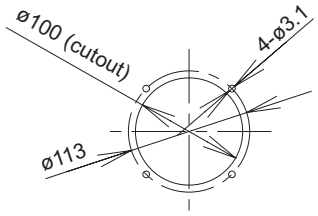

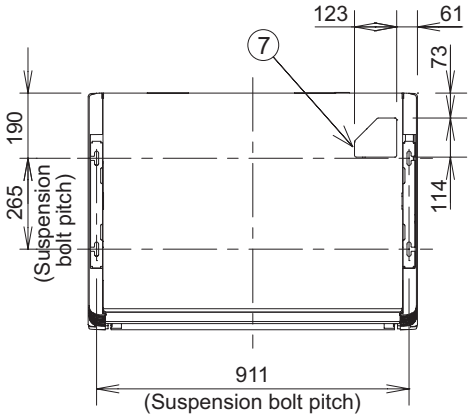

Distance of each exposed bolt must be of equal length within 50mm.

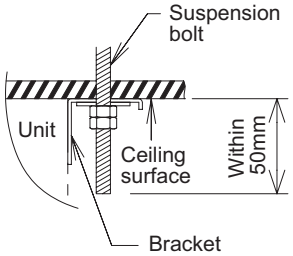

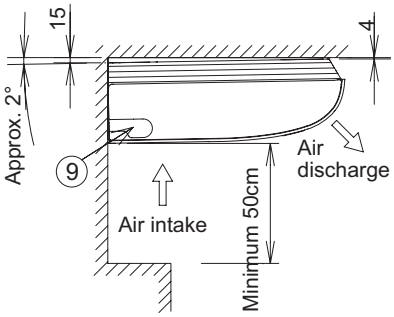

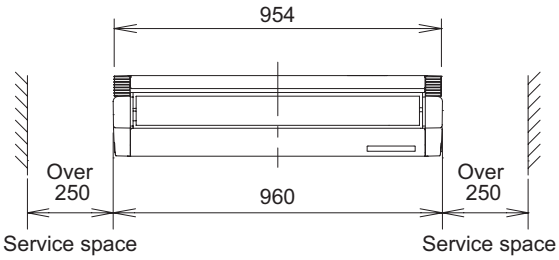

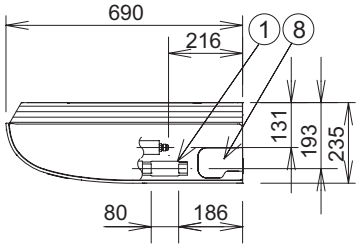

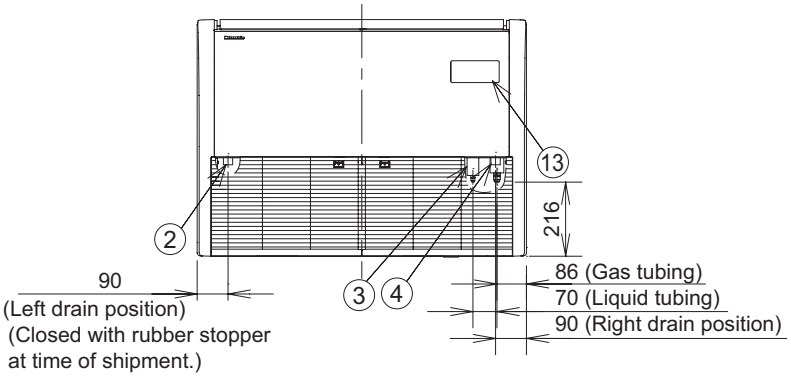

①	Drain port VP20 (inside diameter ø26mm, drain hose supplied)
②	Left drain position
③	Refrigerant liquid tubing (ø6.35mm, flare connection)
④	Refrigerant gas tubing (ø12.7mm, flare connection)
⑤	Cover of rear tubing hole
⑥	Tubing hole on wall surface (ø100mm)
⑦	Upper side tubing port
⑧	Right side drain hose outlet port (cutout)
⑨	Left side drain hose outlet port (cutout)
⑩	Left-rear side drain hose outlet port (cutout)
⑪	Power inlet port
⑫	Remote control wiring and inter-unit wiring inlet port
⑬	Wireless remote controller receiver installation location
⑭	Outside air intake duct connection port (ø100mm, cutout)

Hole position of indoor unit rear-side
(Figure shows view from front)

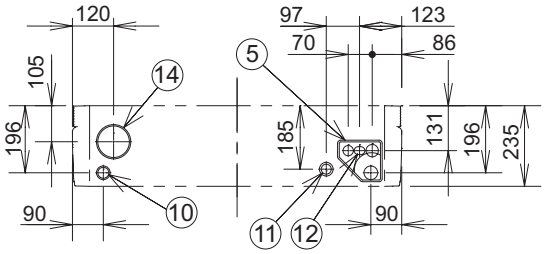

Tubing hole position on wall surface
(Figure shows view from front)

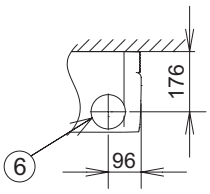

<Filter size>

(421 x 250 x 16) x 2 pcs.

1-2. Dimensional Data

(A) Indoor Units: S-60PT2E5B, S-71PT2E5B

unit :mm

Detailed view of intaking outside air duct connection port

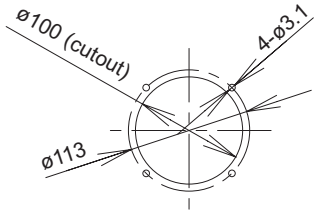

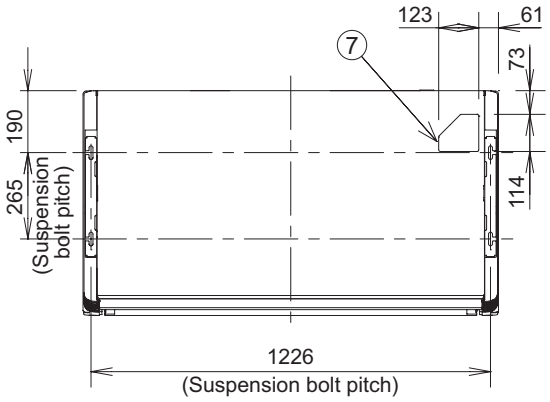

Distance of each exposed bolt must be of equal length within 50mm.

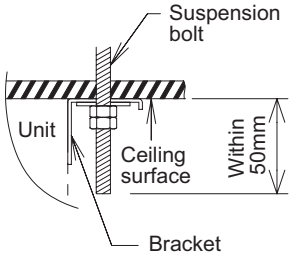

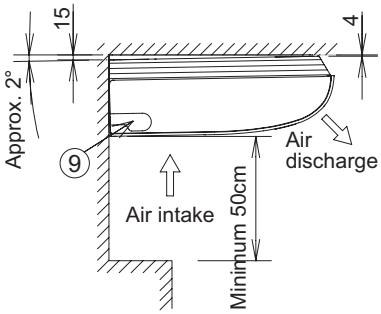

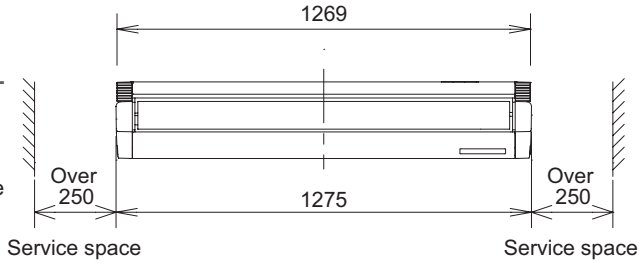

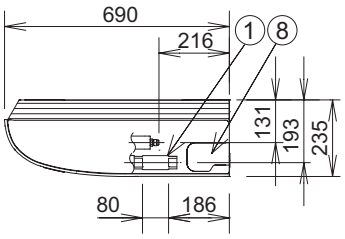

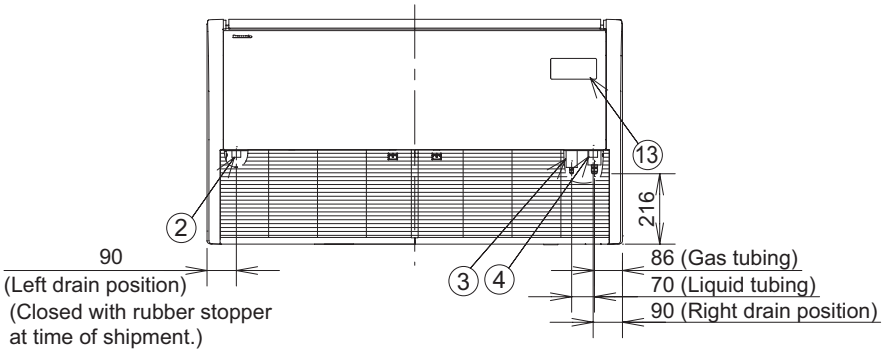

①	Drain port VP20 (inside diameter ø26mm, drain hose supplied)
②	Left drain position
③	Refrigerant liquid tubing (ø9.52mm, flare connection)
④	Refrigerant gas tubing (ø15.88mm, flare connection)
⑤	Cover of rear tubing hole
⑥	Tubing hole on wall surface (ø100mm)
⑦	Upper side tubing port
⑧	Right side drain hose outlet port (cutout)
⑨	Left side drain hose outlet port (cutout)
⑩	Left-rear side drain hose outlet port (cutout)
⑪	Power inlet port
⑫	Remote control wiring and inter-unit wiring inlet port
⑬	Wireless remote controller receiver installation location
⑭	Outside air intake duct connection port (ø100mm, cutout)

Hole position of indoor unit rear-side
(Figure shows view from front)

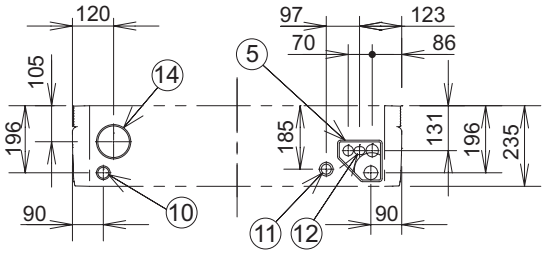

Tubing hole position on wall surface
(Figure shows view from front)

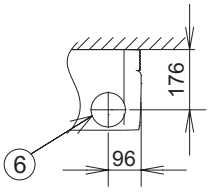

<Filter size>

(579 x 250 x 16) x 2 pcs.

1-2. Dimensional Data

(A) Indoor Units: S-100PT2E5B, S-125PT2E5B, S-140PT2E5B

unit :mm

Detailed view of intaking outside air duct connection port

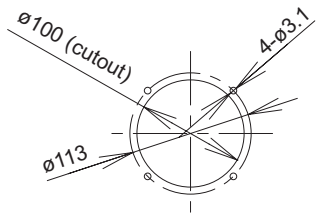

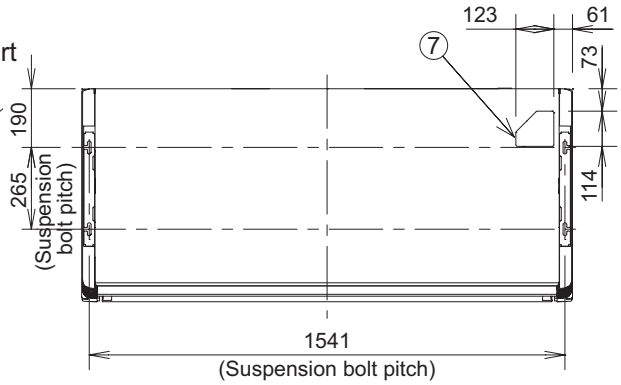

Distance of each exposed bolt must be of equal length within 50mm.

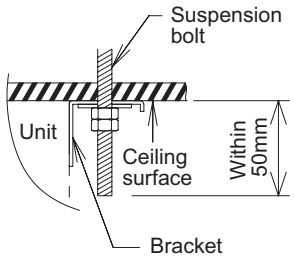

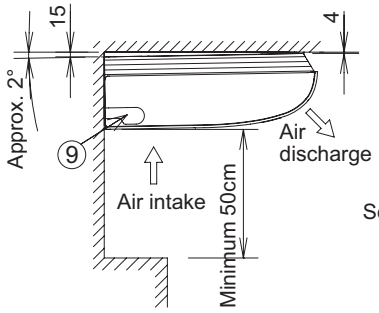

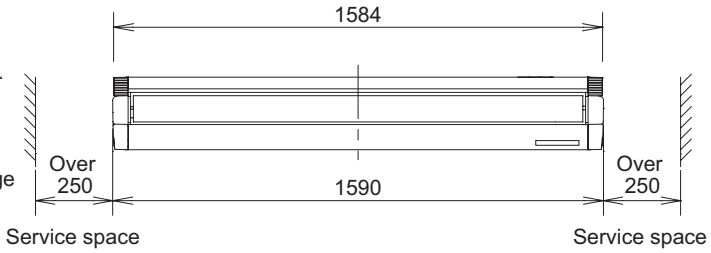

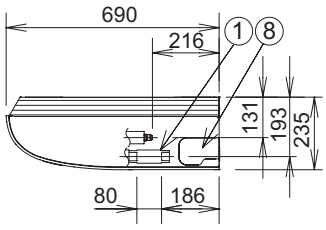

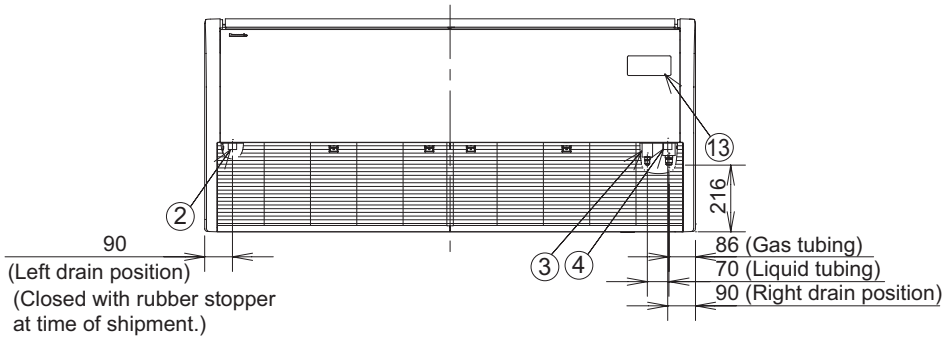

①	Drain port VP20 (inside diameter ø26mm, drain hose supplied)
②	Left drain position
③	Refrigerant liquid tubing (ø9.52mm, flare connection)
④	Refrigerant gas tubing (ø15.88mm, flare connection)
⑤	Cover of rear tubing hole
⑥	Tubing hole on wall surface (ø100mm)
⑦	Upper side tubing port
⑧	Right side drain hose outlet port (cutout)
⑨	Left side drain hose outlet port (cutout)
⑩	Left-rear side drain hose outlet port (cutout)
⑪	Power inlet port
⑫	Remote control wiring and inter-unit wiring inlet port
⑬	Wireless remote controller receiver installation location
⑭	Outside air intake duct connection port (ø100mm, cutout)

Hole position of indoor unit rear-side
(Figure shows view from front)

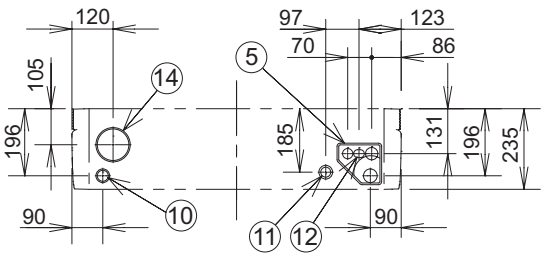

Tubing hole position on wall surface
(Figure shows view from front)

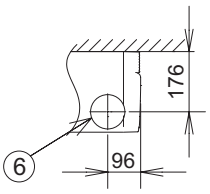

<Filter size>

(736 x 250 x 16) x 2 pcs.

1-2. Dimensional Data

(A) Indoor units: S-50PK2E5B, 60PK2E5B, 71PK2E5B, 100PK2E5B

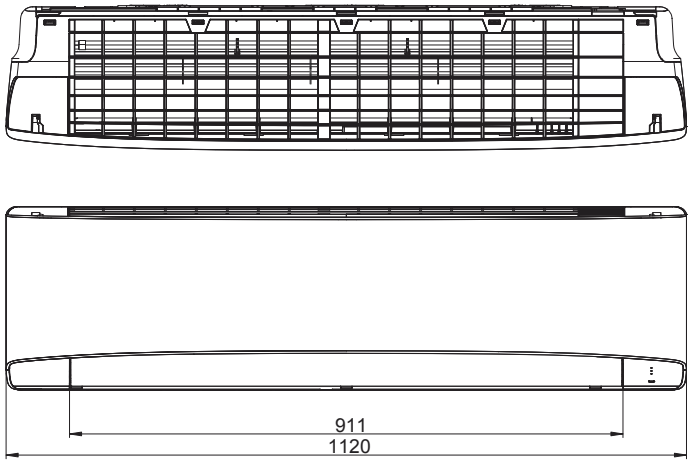

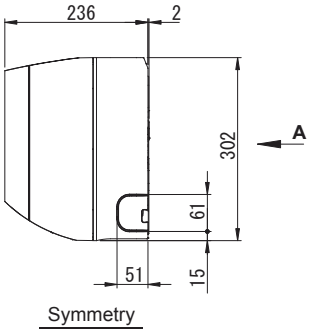

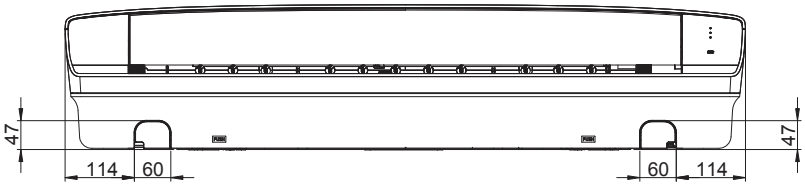

unit: mm

①	Refrigerant tubing (liquid tube)	Type 50	Ø6.35 (flared)
		Type 60-100	Ø9.52 (flared)
②	Refrigerant tubing (gas tube)	Type 50	Ø12.7 (flared)
		Type 60-100	Ø15.88 (flared)
③	Drain hose		
④	Rear panel		
⑤	Rear panel fixing holes (Ø5.3 holes or as shown in figure "C")		
⑥	Tubing and wiring holes (Ø80)		

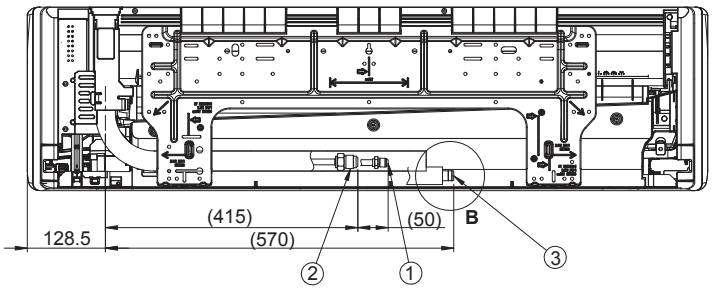

VIEW A

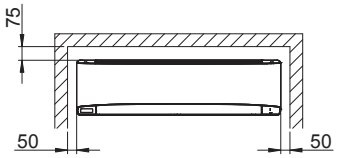

Minimum space requirements for installation

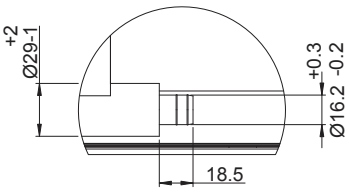

Detailed view B

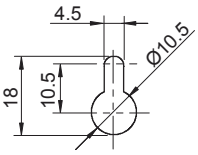

Detailed view C

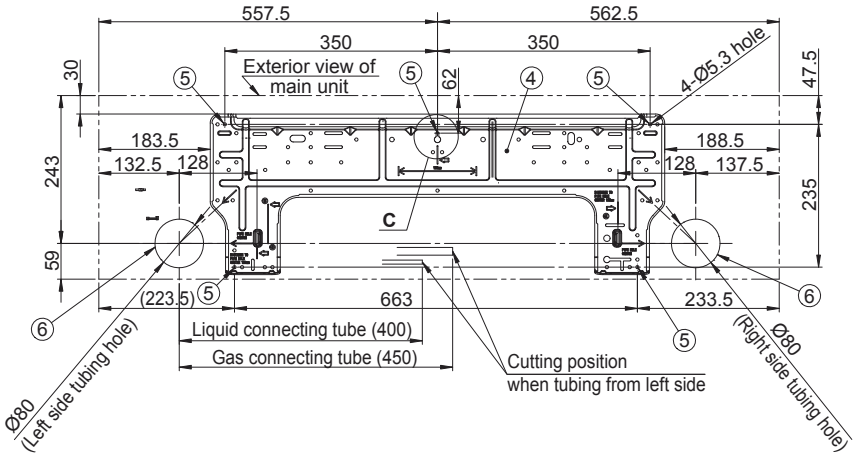

1-2. Dimensional Data

(A) Indoor Units: S-50PF1E5B, S-60PF1E5B, S-71PF1E5B, S-100PF1E5B, S-125PF1E5B, S-140PF1E5B

Unit: mm

Type	A	B	C	D	E	F
50	867	800	450 (Pitch 150 × 3)	71	592	12
60, 71	1,067	1,000	750 (Pitch 150 × 5)	21	792	16
100, 125, 140	1,467	1,400	1,050 (Pitch 150 × 7)	71	1,192	20

a) Refrigerant tubing joint (liquid tube)
b) Refrigerant tubing joint (gas tube)
c) Upper drain port VP25 (O.D. 32 mm)
ℓ 200 flexible hose supplied
d) Bottom drain port VP25 (O.D. 32 mm)
e) Suspension lug (4 – 12 × 30 mm)
f) Power supply outlet
g) Fresh air intake port (ø150 mm)
h) Flange for flexible air outlet duct
i) Electrical component box
j) Filter

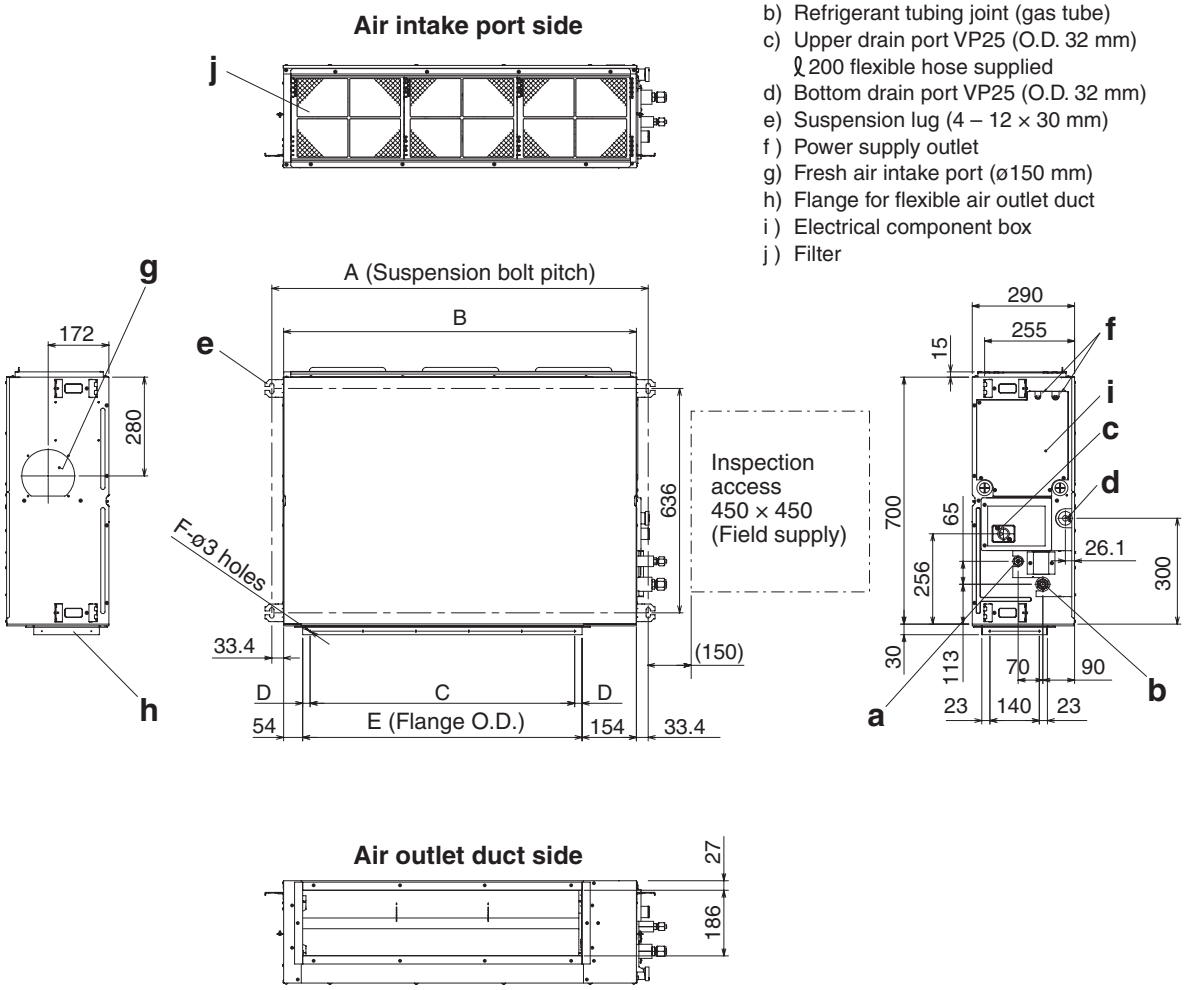

1-2. Dimensional Data

(B) Outdoor Units: U-100PZ2E5 / U-125PZ2E5 / U-140PZ2E5
U-100PZ2E8 / U-125PZ2E8 / U-140PZ2E8

Unit: mm

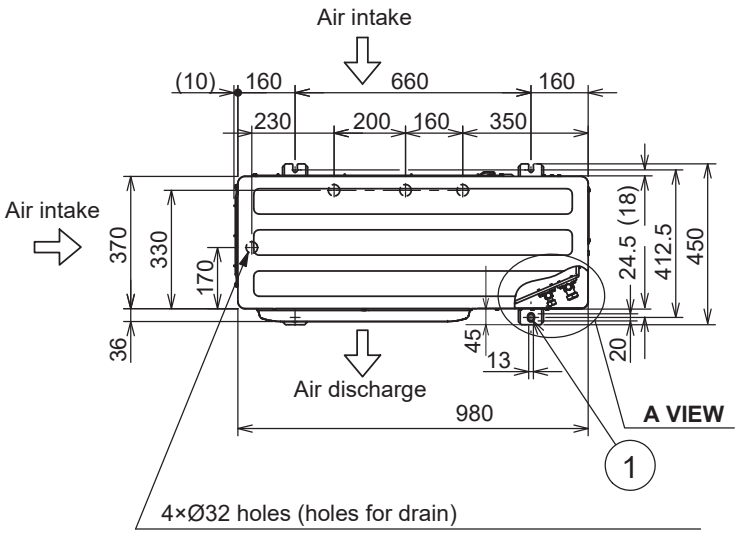

①	Mounting hole (4-R6.5), anchor bolt : M10
②	Refrigerant tubing (liquid tube), flared connection (Ø9.52)
③	Refrigerant tubing (gas tube), flared connection (Ø15.88)
④	Refrigerant tubing port
⑤	Electrical wiring port (Ø13)
⑥	Electrical wiring port (Ø22)
⑦	Electrical wiring port (Ø27)
⑧	Electrical wiring port (Ø35)

When using a drain pipe, install the drain socket (field supply) on to the drain port.Seal the other drain port with the rubber cap.

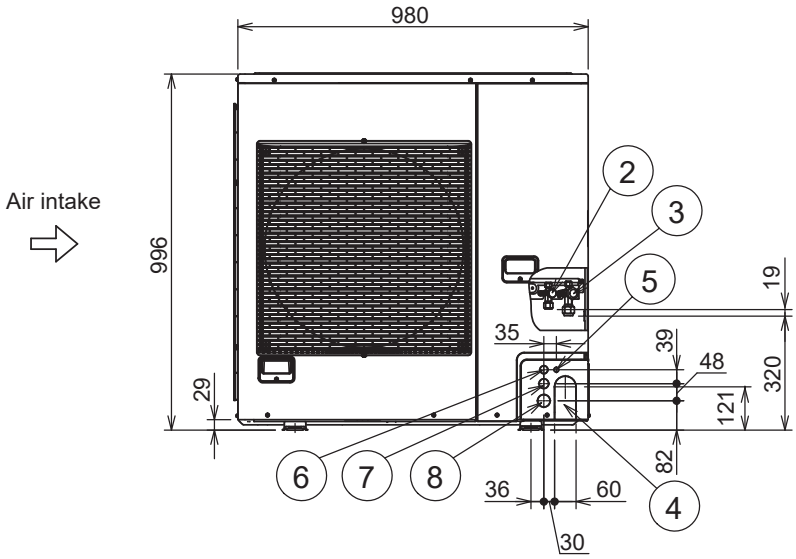

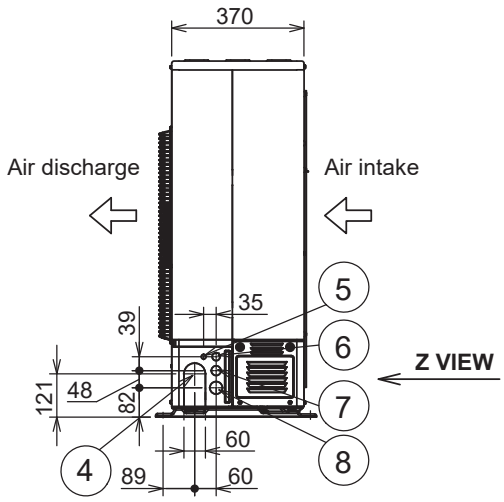

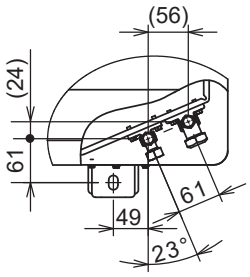

A VIEW

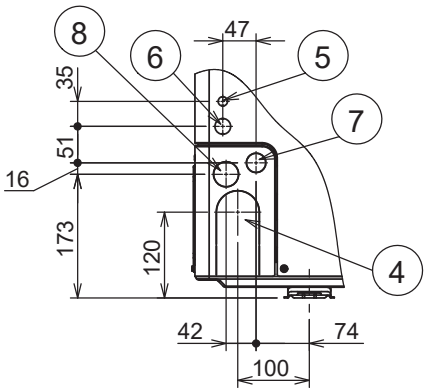

Z VIEW

1-3. Refrigerant Flow Diagram

Outdoor Units: **U-100PZ2E5 / U-125PZ2E5 / U-140PZ2E5**
U-100PZ2E8 / U-125PZ2E8 / U-140PZ2E8

Indoor Unit:

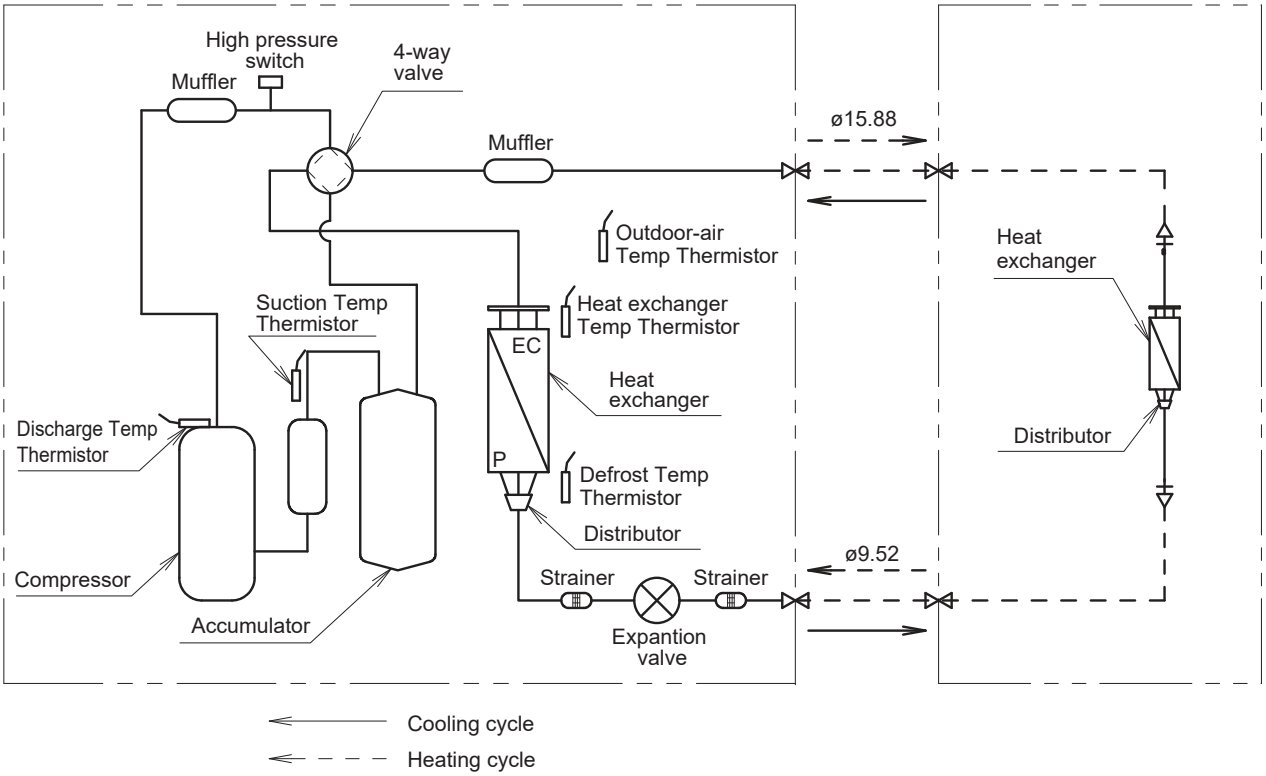

1-4. Operating Range

	Temperature	Indoor air intake temp.	Outdoor air intake temp.
Cooling	Maximum	32°C DB / 25°C WB	43°C DB
	Minimum	18°C DB / 14°C WB	-10°C DB
Heating	Maximum	30°C DB / − WB	24°C DB/18°C WB
	Minimum	16°C DB / − WB	-15°C DB / -15°C WB

Cooling

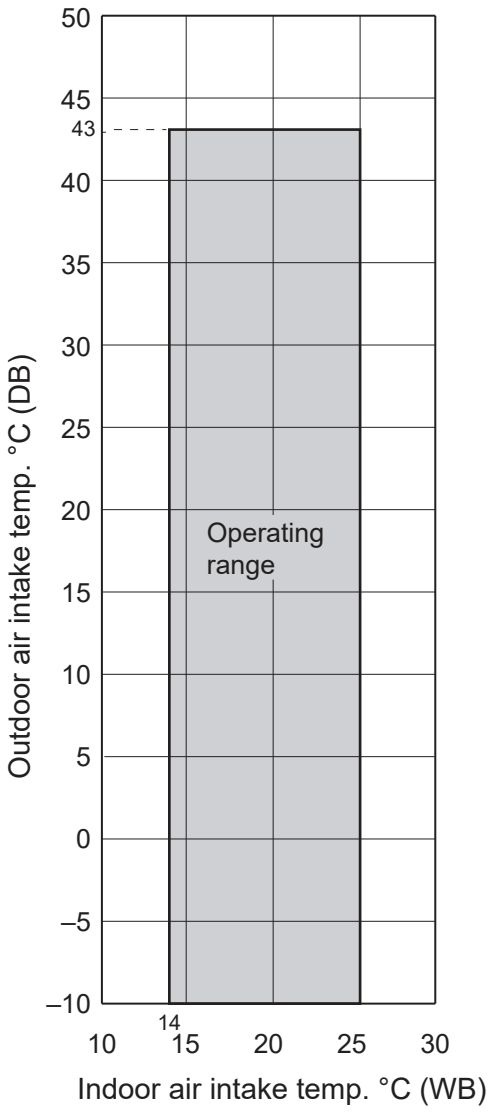

Heating

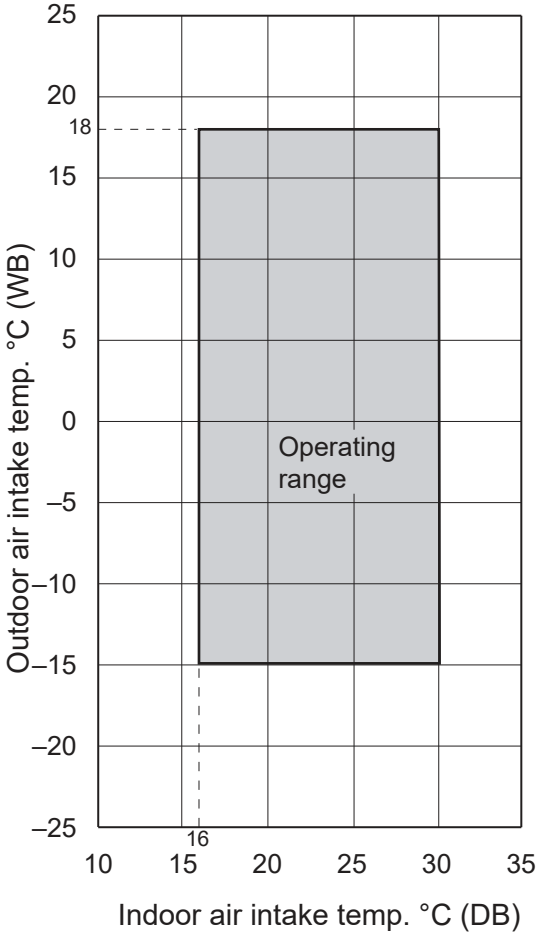

1-5. Capacity Correction Graph According to Temperature Condition

U-100PZ2E5 (For 50 Hz), U-100PZ2E8 (For 50 Hz)

Cooling capacity ratio (maximum capacity)

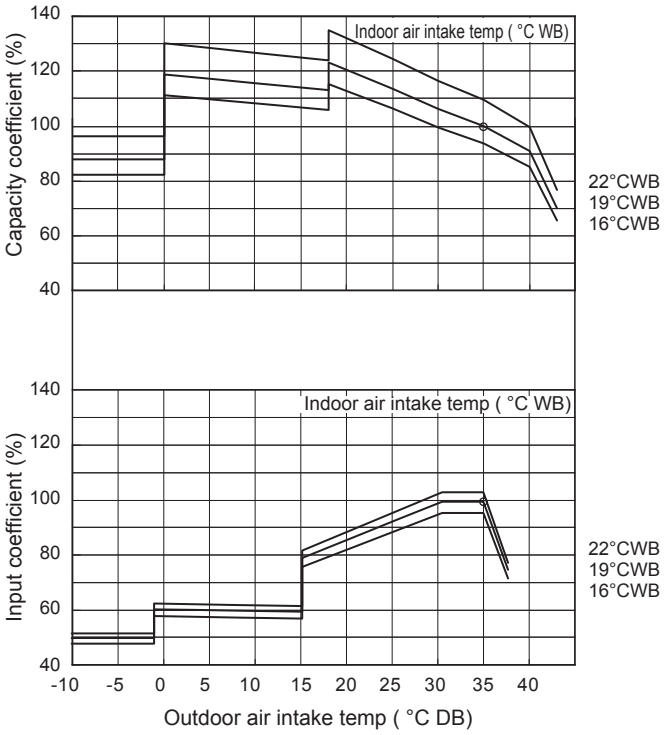

Heating capacity ratio (maximum capacity)

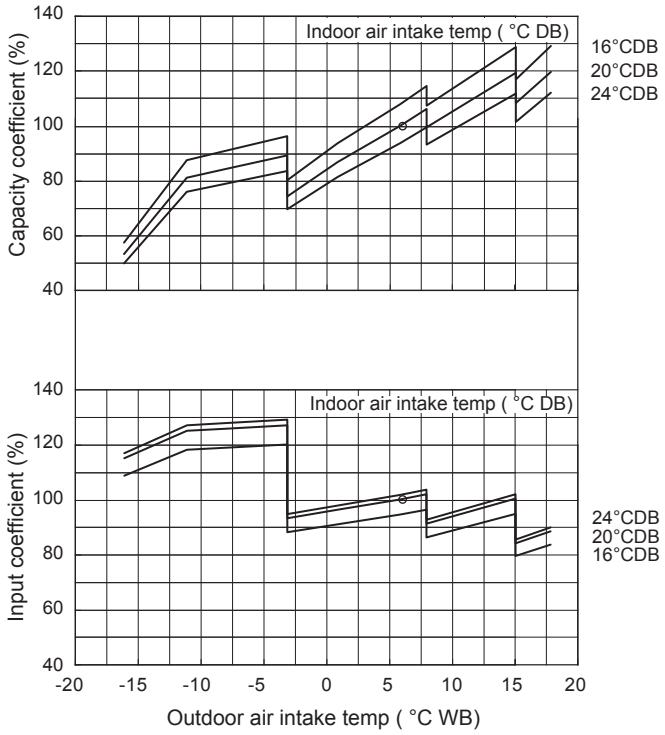

Cooling

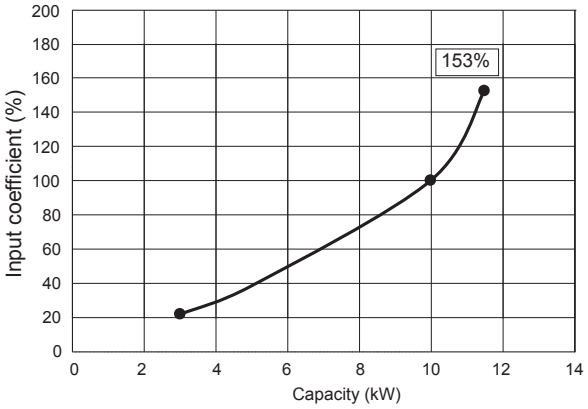

Heating

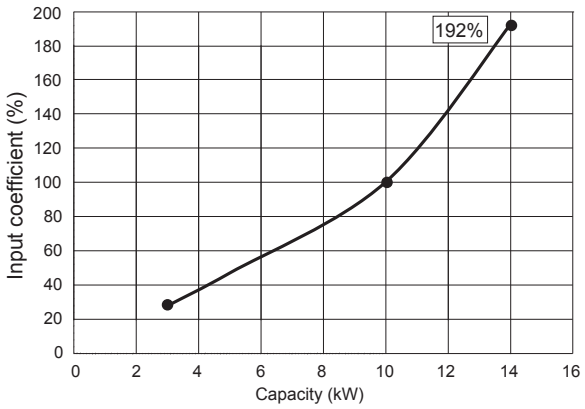

Outdoor unit heating capacity correction cofficient during of frosting/defrosting (RH approximately 85%)

Outdoor intake air temperature °C WB	-15	-14	-13	-12	-11	-10	-9	-8	-7	-6	-5	-4	-3	-2	-1.8	-0.8	0	1	2	3	4	5	6
Correction coefficient	0.88	0.88	0.88	0.88	0.88	0.88	0.88	0.88	0.88	0.88	0.88	0.88	0.87	0.87	0.87	0.85	0.85	0.83	0.85	0.89	0.91	0.95	1.0

To calculate the heating capacity with consideration for frosting/defrosting operation, multiply the heating capacity found from the capacity graph by the correction coefficient from the table above.

1-5. Capacity Correction Graph According to Temperature Condition

U-125PZ2E5 (For 50 Hz), U-125PZ2E8 (For 50 Hz)

Cooling capacity ratio (maximum capacity)

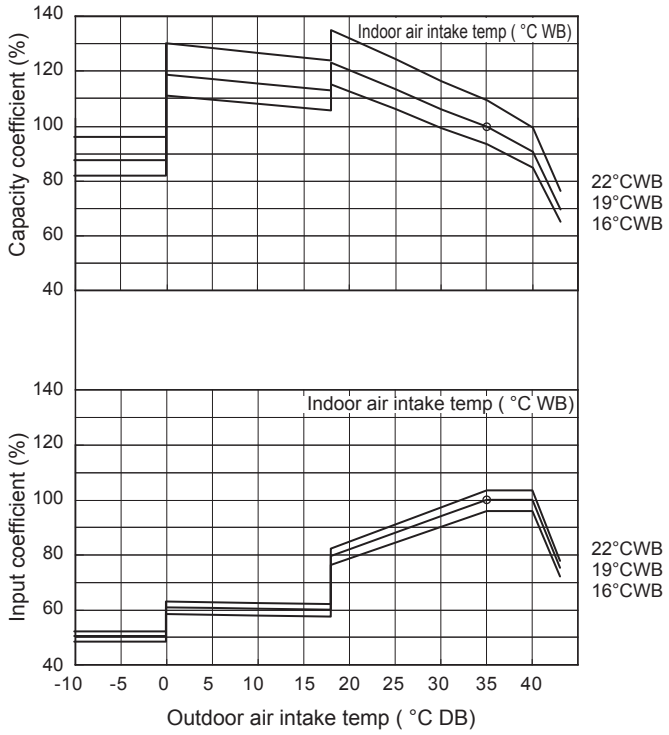

Heating capacity ratio (maximum capacity)

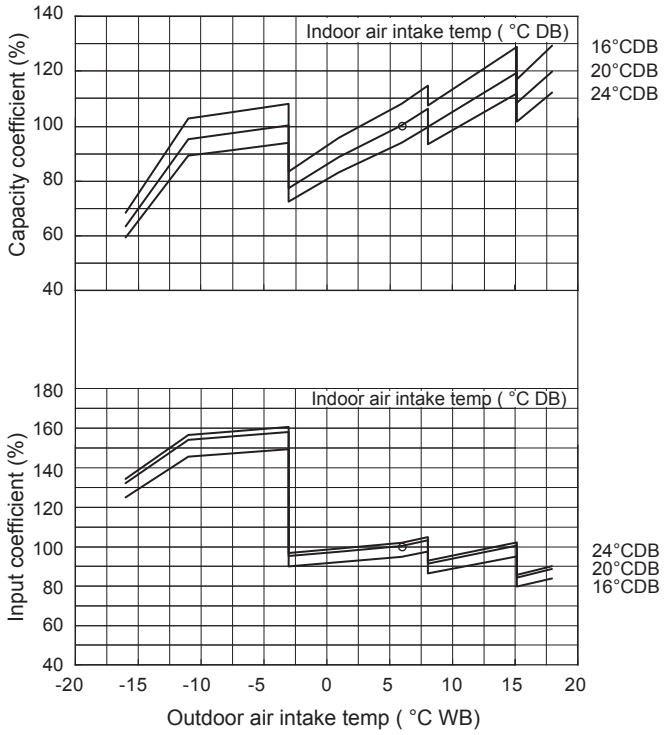

Cooling

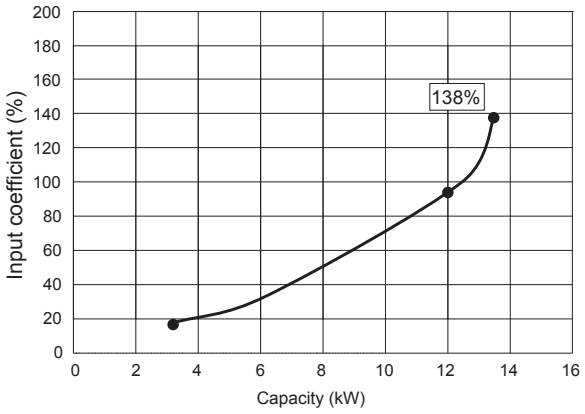

Heating

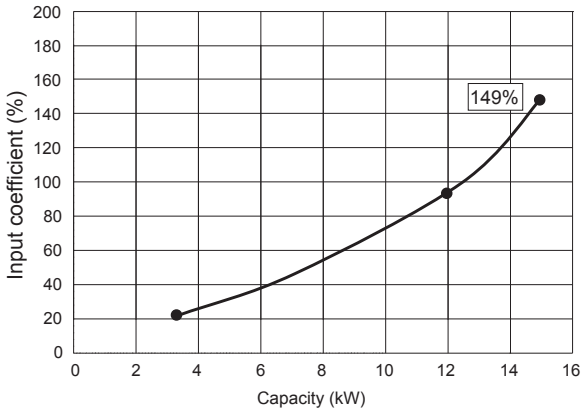

Outdoor unit heating capacity correction cofficient during of frosting/defrosting (RH approximately 85%)

Outdoor intake air temperature °C WB	-15	-14	-13	-12	-11	-10	-9	-8	-7	-6	-5	-4	-3	-2	-1.8	-0.8	0	1	2	3	4	5	6
Correction coefficient	0.88	0.88	0.88	0.88	0.88	0.88	0.88	0.88	0.88	0.88	0.88	0.88	0.87	0.87	0.87	0.85	0.85	0.83	0.85	0.89	0.91	0.95	1.0

To calculate the heating capacity with consideration for frosting/defrosting operation, multiply the heating capacity found from the capacity graph by the correction coefficient from the table above.

1-5. Capacity Correction Graph According to Temperature Condition

U-140PZ2E5 (For 50 Hz), U-140PZ2E8 (For 50 Hz)

Cooling capacity ratio (maximum capacity)

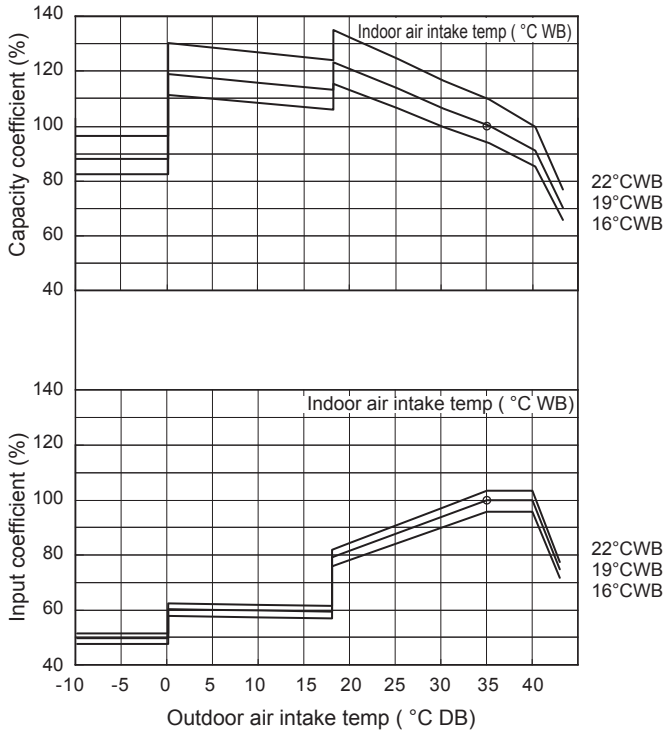

Heating capacity ratio (maximum capacity)

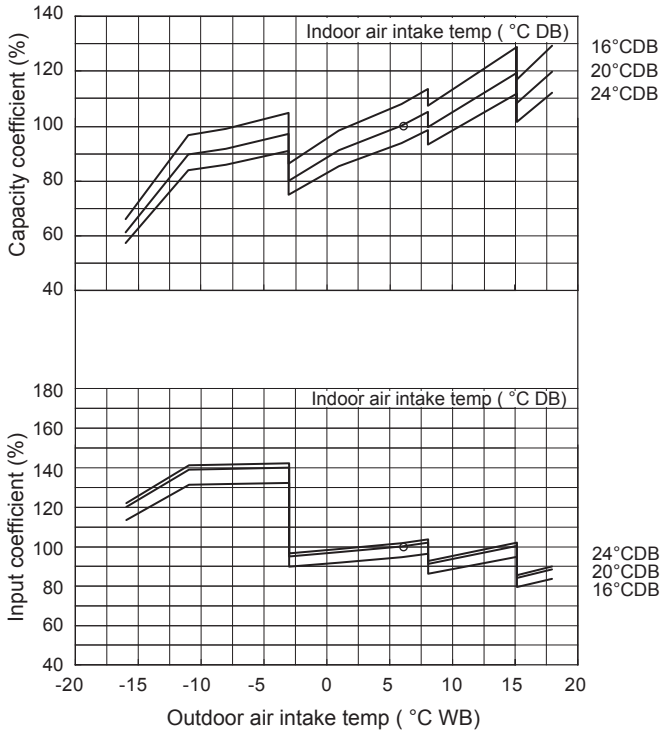

Cooling

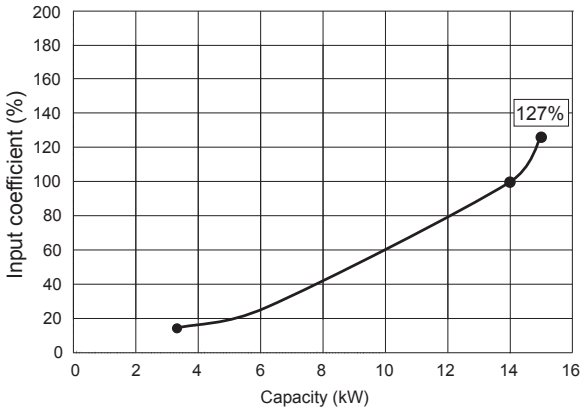

Heating

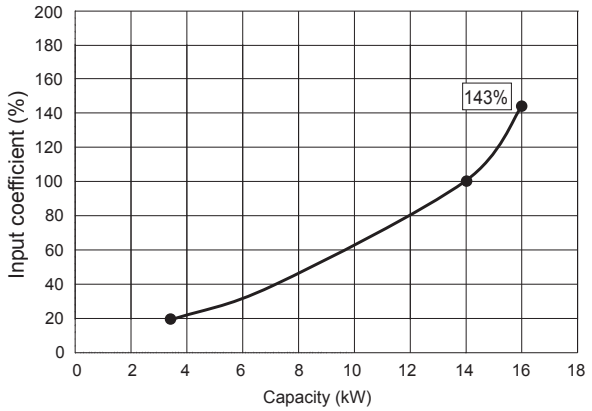

Outdoor unit heating capacity correction cofficient during of frosting/defrosting (RH approximately 85%)

Outdoor intake air temperature °C WB	-15	-14	-13	-12	-11	-10	-9	-8	-7	-6	-5	-4	-3	-2	-1.8	-0.8	0	1	2	3	4	5	6
Correction coefficient	0.88	0.88	0.88	0.88	0.88	0.88	0.88	0.88	0.88	0.88	0.88	0.88	0.87	0.87	0.87	0.85	0.85	0.83	0.85	0.89	0.91	0.95	1.0

To calculate the heating capacity with consideration for frosting/defrosting operation, multiply the heating capacity found from the capacity graph by the correction coefficient from the table above.

1-6. Noise Criterion Curves

(A) Indoor Units:

4-Way Cassette Type

High
Low

MODEL	: S-50PU2E5B	
SOUND LEVEL	: High	32 dB(A)
	Low	27 dB(A)
CONDITION	: Under the unit 1.5m	
SOURCE	: 230-240V, 1 phase, 50Hz	

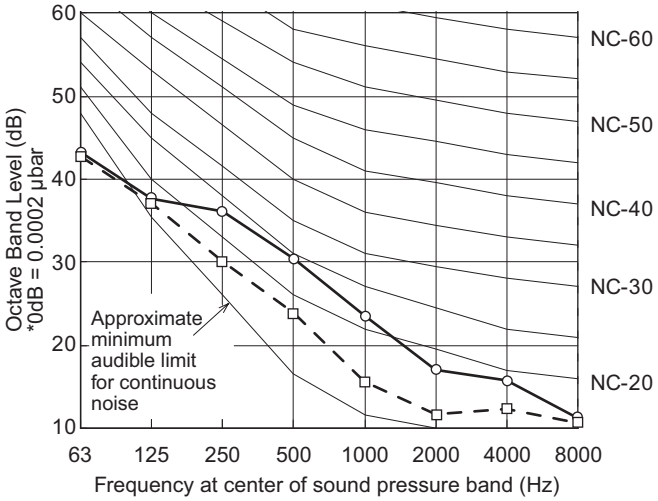

MODEL	: S-60PU2E5B	
SOUND LEVEL	: High	36 dB(A)
	Low	28 dB(A)
CONDITION	: Under the unit 1.5m	
SOURCE	: 230-240V, 1 phase, 50Hz	

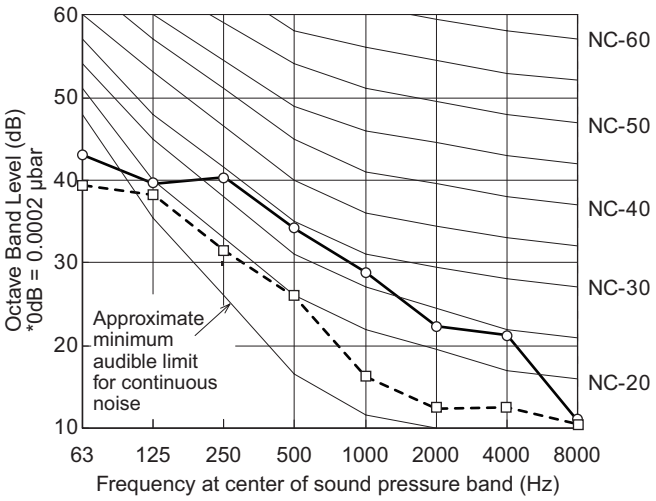

1-6. Noise Criterion Curves

(A) Indoor Units:

4-Way Cassette Type

High
Low

MODEL : S-71PU2E5B

SOUND LEVEL	: High	37 dB(A)
	Low	28 dB(A)
CONDITION	: Under the unit 1.5m	
SOURCE	: 230-240V, 1 phase, 50Hz	

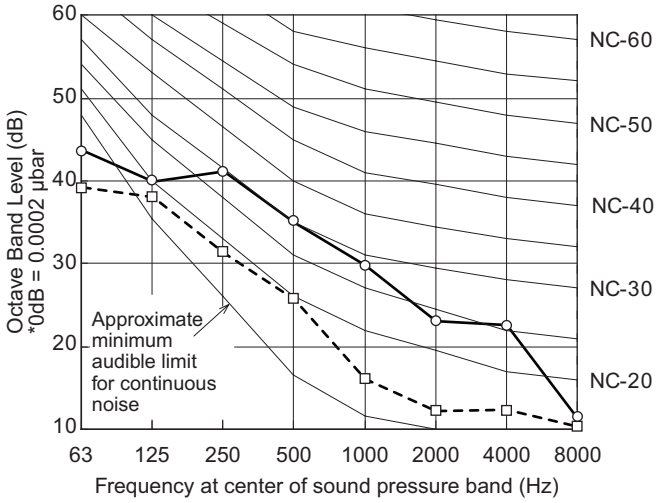

MODEL : S-100PU2E5B

SOUND LEVEL	: High	45 dB(A)
	Low	32 dB(A)
CONDITION	: Under the unit 1.5m	
SOURCE	: 230-240V, 1 phase, 50Hz	

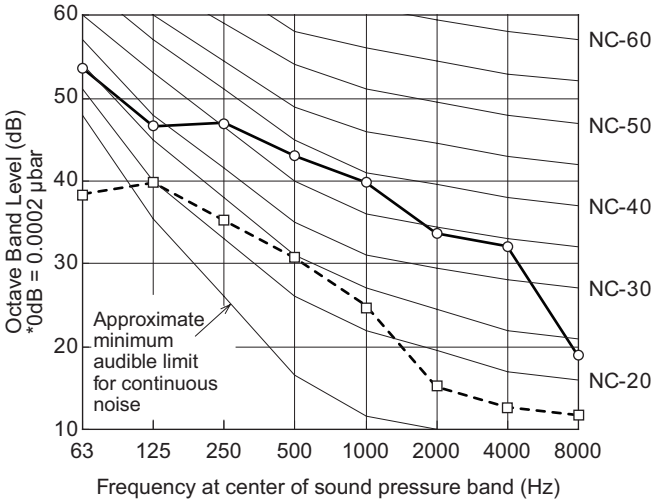

MODEL : S-125PU2E5B

SOUND LEVEL	: High	46 dB(A)
	Low	33 dB(A)
CONDITION	: Under the unit 1.5m	
SOURCE	: 230-240V, 1 phase, 50Hz	

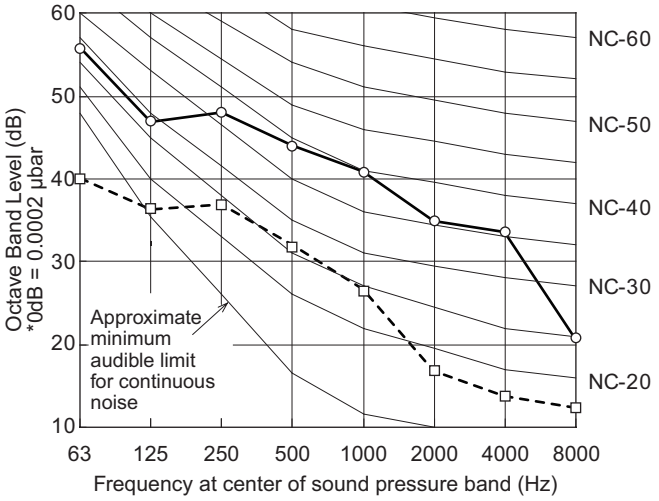

MODEL : S-140PU2E5B

SOUND LEVEL	: High	47 dB(A)
	Low	34 dB(A)
CONDITION	: Under the unit 1.5m	
SOURCE	: 230-240V, 1 phase, 50Hz	

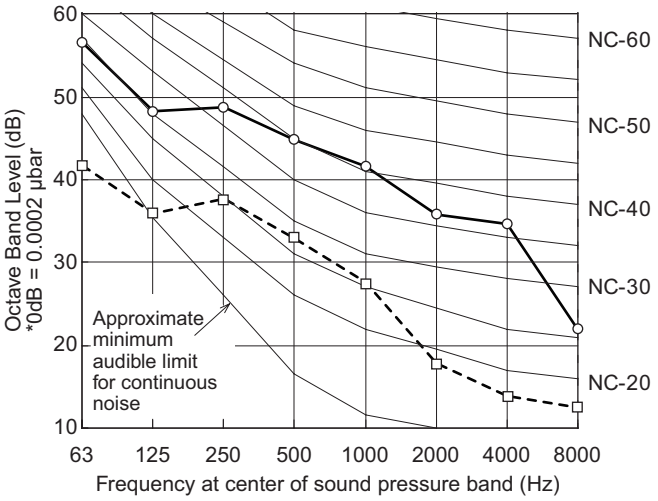

REMARKS:

1. Value obtained in the actual place where the unit is installed may be slightly higher than the values shown in this graph because of the conditions of operation, the structure of the building, the background noise and other factors.
2. The test results were obtained from an anechoic room.

NOTE

To evaluate "Noise level" the maximum number of the measured OCTAVE BAND SOUND PRESSURE LEVEL is used.
Read the number on each BAND CENTER FREQUENCIES (horizontal axis) ranging from 63 Hz to 8000 Hz and select the maximum value (vertical axis) among them.

1-6. Noise Criterion Curves

(A) Indoor Units:

Ceiling Type

High
Low

MODEL : S-50PT2E5B

SOUND LEVEL :	High	37 dB(A)
	Low	29 dB(A)
CONDITION	: 1 m from front of outlet at height of 1 m	
SOURCE	: 220-230-240V, 1 phase, 50Hz	

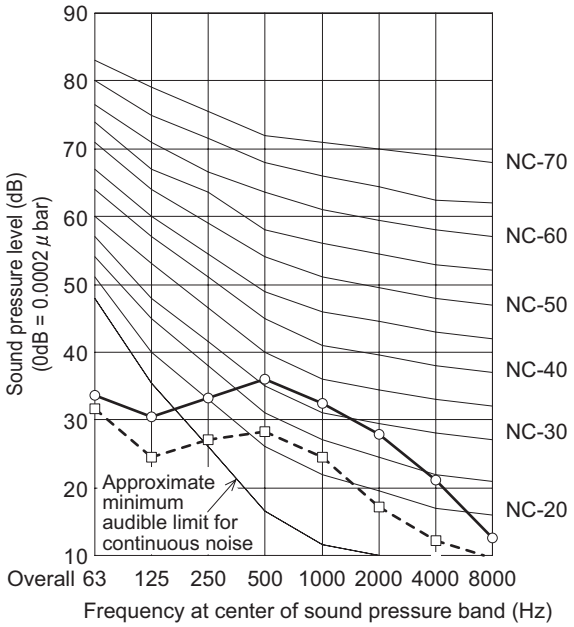

MODEL : S-60PT2E5B

SOUND LEVEL :	High	38 dB(A)
	Low	30 dB(A)
CONDITION	: 1 m from front of outlet at height of 1 m	
SOURCE	: 220-230-240V, 1 phase, 50Hz	

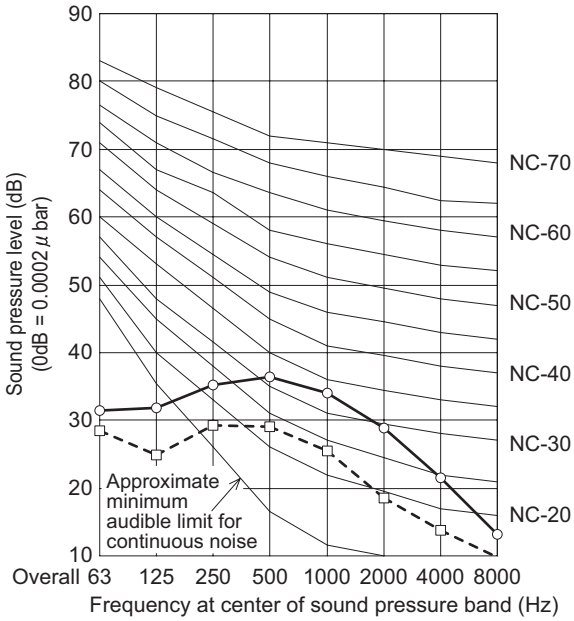

MODEL : S-71PT2E5B

SOUND LEVEL :	High	39 dB(A)
	Low	31 dB(A)
CONDITION	: 1 m from front of outlet at height of 1 m	
SOURCE	: 220-230-240V, 1 phase, 50Hz	

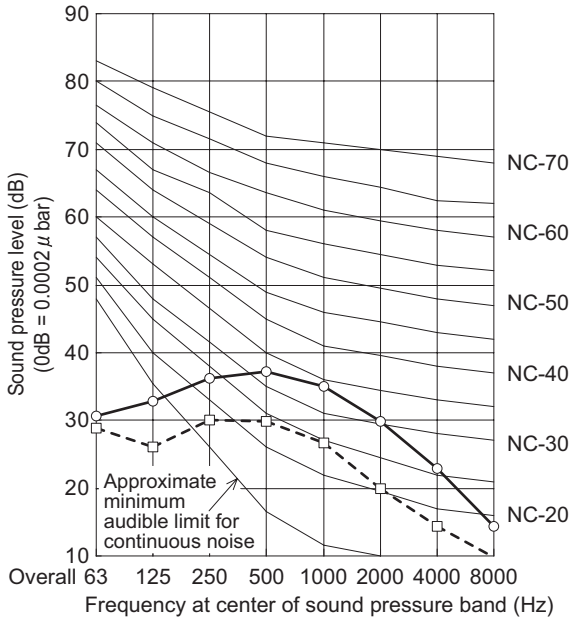

MODEL : S-100PT2E5B

SOUND LEVEL :	High	42 dB(A)
	Low	35 dB(A)
CONDITION	: 1 m from front of outlet at height of 1 m	
SOURCE	: 220-230-240V, 1 phase, 50Hz	

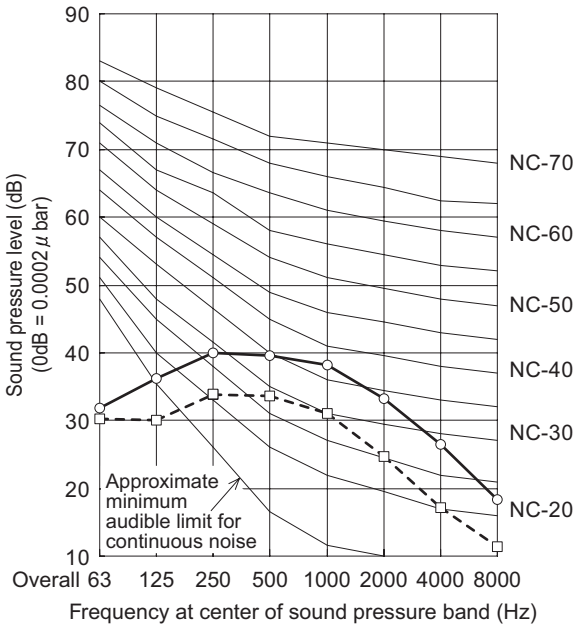

1-6. Noise Criterion Curves

(A) Indoor Units:

Ceiling Type

High
Low

MODEL : S-125PT2E5B

SOUND LEVEL :	High	46 dB(A)
	Low	36 dB(A)
CONDITION	: 1 m from front of outlet at height of 1 m	
SOURCE	: 220-230-240V, 1 phase, 50Hz	

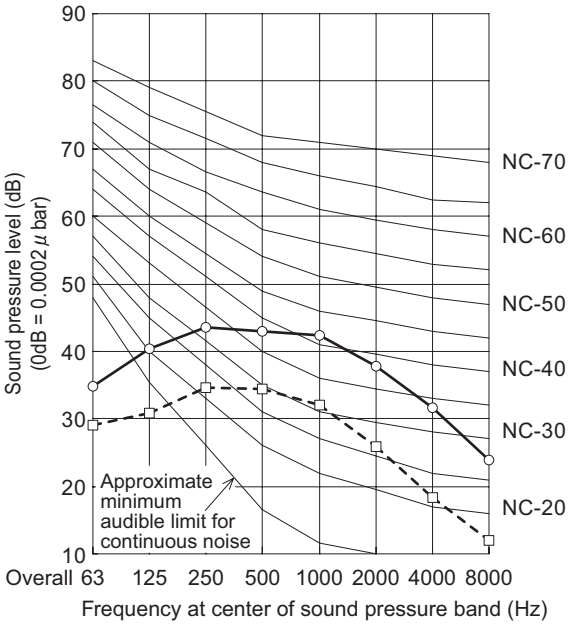

MODEL : S-140PT2E5B

SOUND LEVEL :	High	47 dB(A)
	Low	37 dB(A)
CONDITION	: 1 m from front of outlet at height of 1 m	
SOURCE	: 220-230-240V, 1 phase, 50Hz	

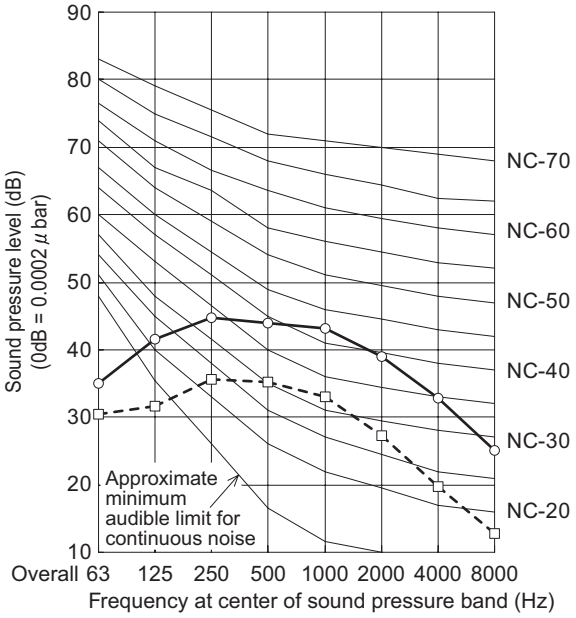

1-6. Noise Criterion Curves

(A) Indoor Units:

Wall Mounted Type

Strong
Weak

MODEL	: S-50PK2E5B	
SOUND LEVEL	: STRONG	40 dB(A)
	High	36 dB(A)
	Low	32 dB(A)
CONDITION	: 1m in front of air discharge and then 1m below	

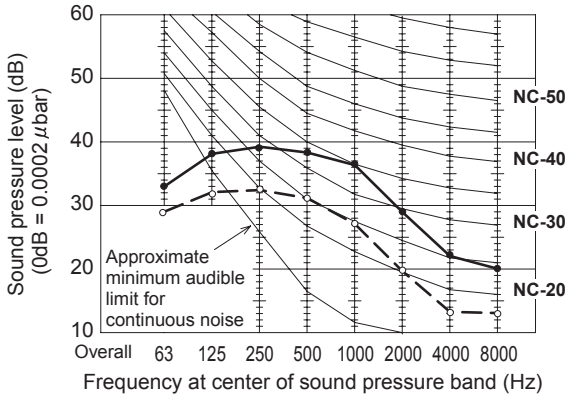

MODEL	: S-60PK2E5B, S-71PK2E5B	
SOUND LEVEL	: STRONG	47 dB(A)
	High	44 dB(A)
	Low	40 dB(A)
CONDITION	: 1m in front of air discharge and then 1m below	

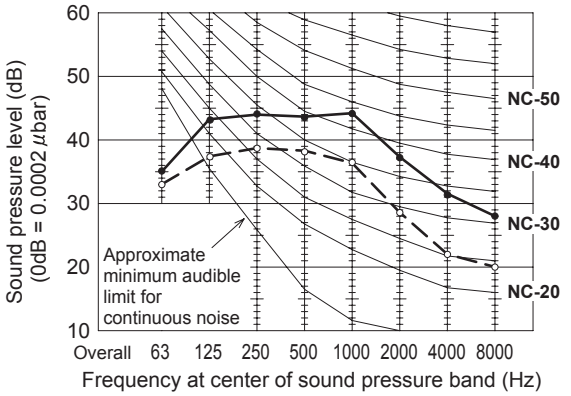

MODEL	: S-100PK2E5B	
SOUND LEVEL	: STRONG	49 dB(A)
	High	45 dB(A)
	Low	41 dB(A)
CONDITION	: 1m in front of air discharge and then 1m below	

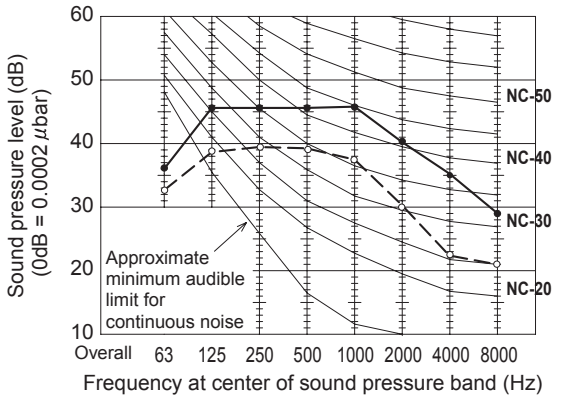

1-6. Noise Criterion Curves

(A) Indoor Units

Low Silhouette Ducted Type

High
Low

MODEL	: S-50PF1E5B
SOUND LEVEL	: High 34 dB(A)
	Low 26 dB(A)
CONDITION	: Under the unit 1.5m
SOURCE	: 220-230-240V, 1 phase, 50Hz

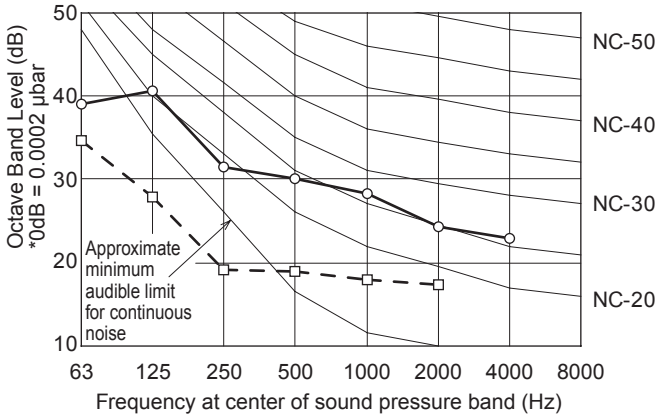

MODEL	: S-60PF1E5B
SOUND LEVEL	: High 35 dB(A)
	Low 26 dB(A)
CONDITION	: Under the unit 1.5m
SOURCE	: 220-230-240V, 1 phase, 50Hz

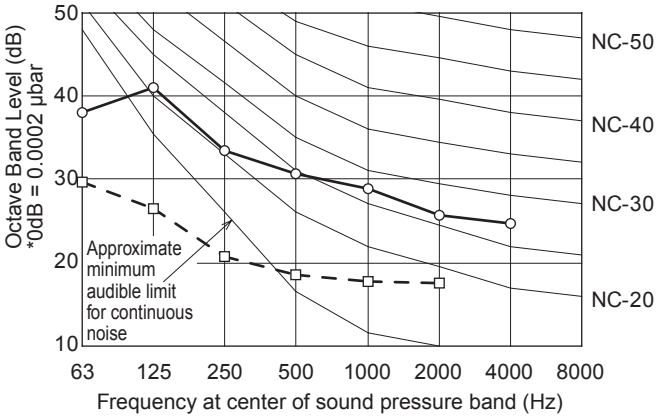

MODEL	: S-71PF1E5B
SOUND LEVEL	: High 35 dB(A)
	Low 26 dB(A)
CONDITION	: Under the unit 1.5m
SOURCE	: 220-230-240V, 1 phase, 50Hz

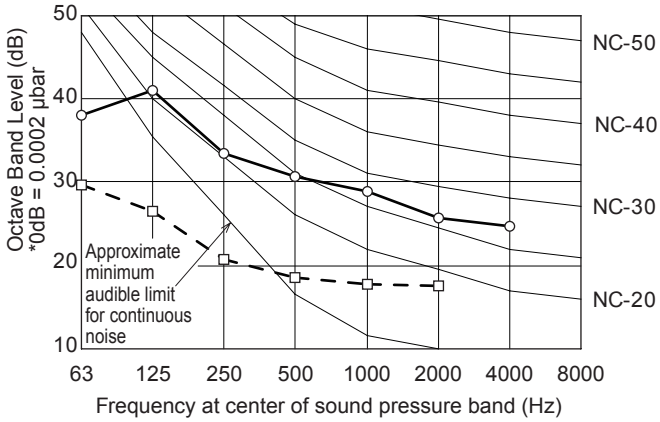

1-6. Noise Criterion Curves

(A) Indoor Units

Low Silhouette Ducted Type

High
Low

MODEL	: S-100PF1E5B	
SOUND LEVEL	: High	38 dB(A)
	Low	31 dB(A)
CONDITION	: Under the unit 1.5m	
SOURCE	: 220-230-240V, 1 phase, 50Hz	

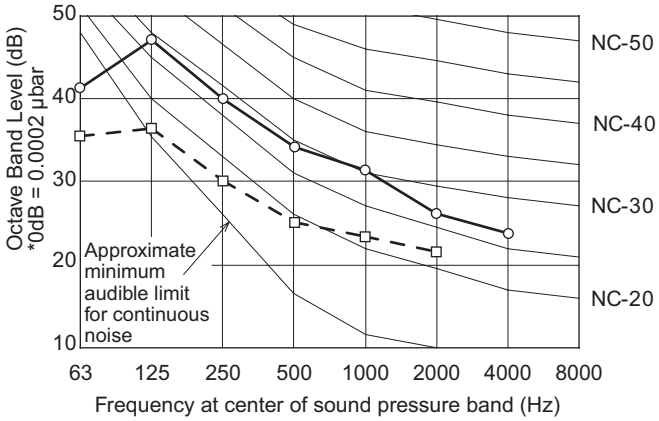

MODEL	: S-125PF1E5B	
SOUND LEVEL	: High	39 dB(A)
	Low	32 dB(A)
CONDITION	: Under the unit 1.5m	
SOURCE	: 220-230-240V, 1 phase, 50Hz	

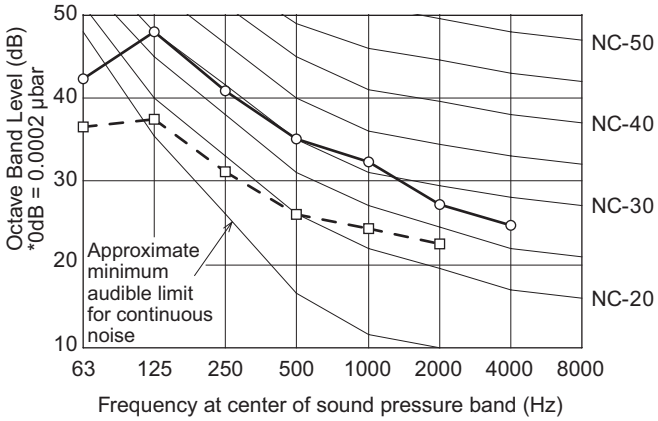

MODEL	: S-140PF1E5B	
SOUND LEVEL	: High	40 dB(A)
	Low	33 dB(A)
CONDITION	: Under the unit 1.5m	
SOURCE	: 220-230-240V, 1 phase, 50Hz	

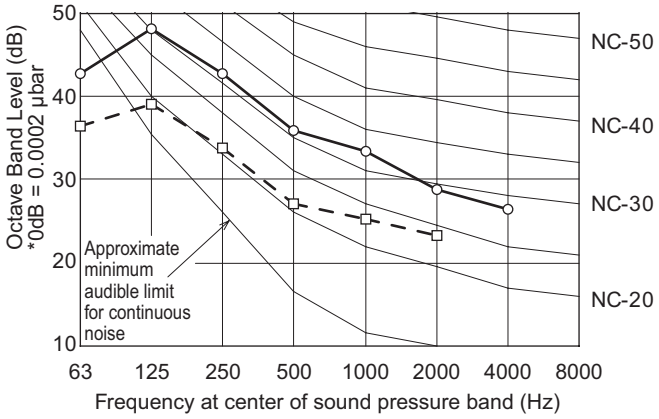

1-6. Noise Criterion Curves

(B) Outdoor Units

MODEL	: U-100PZ2R5, U-100PZ2R8
SOUND LEVEL	: Cooling 52 dB(A)
CONDITION	: 1 m in front at height of 1.5 m
SOURCE	:230-240V, 1 phase, 50Hz 400-415V, 3 phase, 50Hz

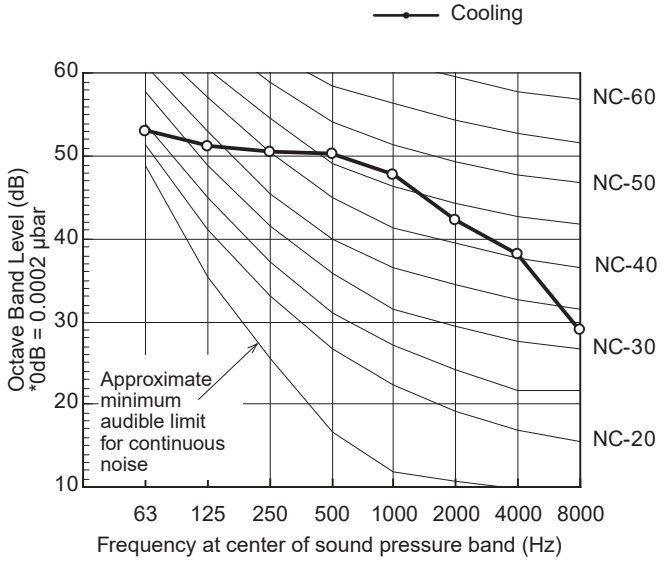

MODEL	: U-100PZ2R5, U-100PZ2R8
SOUND LEVEL	: Heating 52 dB(A)
CONDITION	: 1 m in front at height of 1.5 m
SOURCE	: 230-240V, 1 phase, 50Hz 400-415V, 3 phase, 50Hz

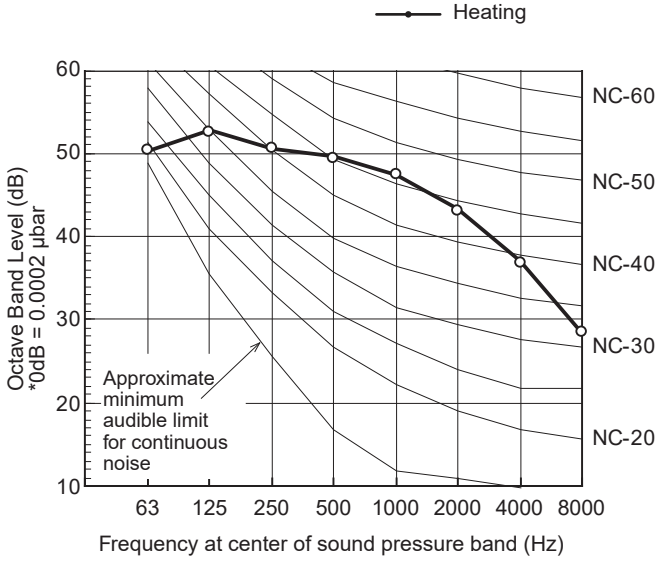

MODEL	: U-125PZ2R5, U-125PZ2R8
SOUND LEVEL	: Cooling 55 dB(A)
CONDITION	: 1 m in front at height of 1.5 m
SOURCE	: 230-240V, 1 phase, 50Hz 400-415V, 3 phase, 50Hz

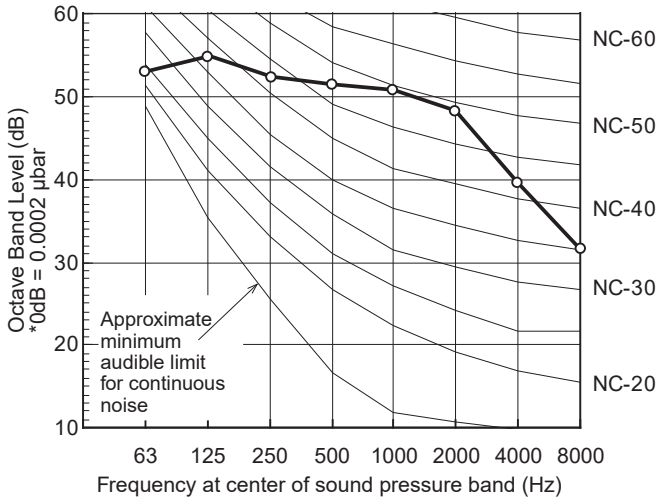

MODEL	: U-125PZ2R5, U-125PZ2R8
SOUND LEVEL	: Heating 55 dB(A)
CONDITION	: 1 m in front at height of 1.5 m
SOURCE	: 230-240V, 1 phase, 50Hz 400-415V, 3 phase, 50Hz

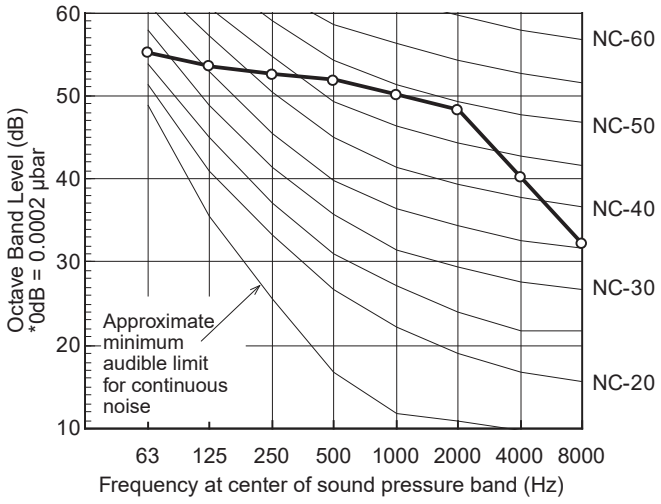

1-6. Noise Criterion Curves

(B) Outdoor Units

MODEL	: U-140PZ2R5, U-140PZ2R8
SOUND LEVEL	: Cooling 56 dB(A)
CONDITION	: 1 m in front at height of 1.5 m
SOURCE	: 230-240V, 1 phase, 50Hz 400-415V, 3 phase, 50Hz

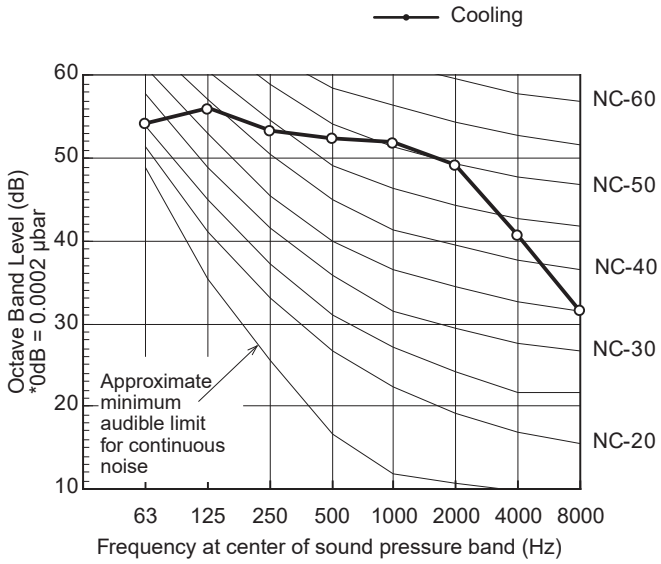

MODEL	: U-140PZ2R5, U-140PZ2R8
SOUND LEVEL	: Heating 56 dB(A)
CONDITION	: 1 m in front at height of 1.5 m
SOURCE	: 230-240V, 1 phase, 50Hz 400-415V, 3 phase, 50Hz

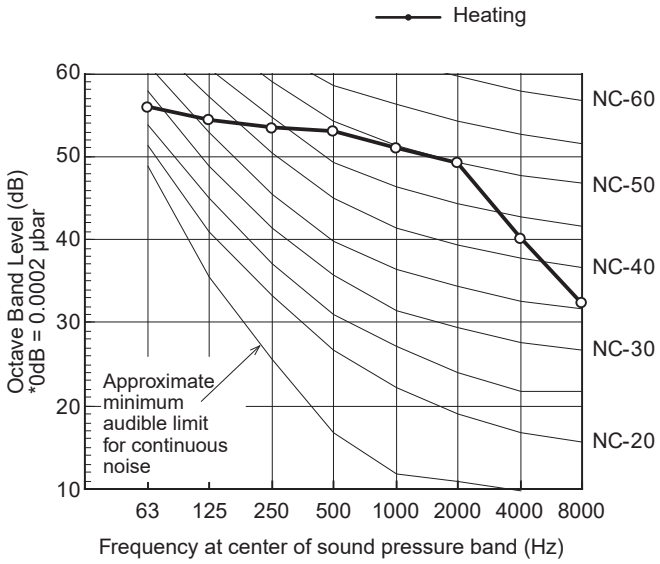

1-7. Indoor Fan Performance (Type F1)

EXTERNAL STATIC PRESSURE SETTING

For low silhouette ducted type indoor units, the ventilating resistance so-called “external static pressure” becomes greatly different depending on the connected duct length, shape, number of air outlet ports and types of filters.
When installing this unit, be sure to carry out the external static pressure setting in order to operate in the rated airflow volume.
Choose one of the following methods from “a”, “b”, “c” or “d” as shown in the flow chart (within the dotted lines) and then make the setting accordingly.

a. No setting modification..... : Use-as-is at shipment (there are cases in which the setting may differ from the shipment setting when reset after once setting the external static pressure.)
b. Manual setting (set with the PC board)..... : For high static pressure. Switching method with the short-circuit connector.
c. Manual setting (set with the wired remote controller) ..... : Low static pressure ~ high static pressure
d. Auto airflow volume setting (set on the wired remote controller) .... : Air outlet volume is automatically adjusted to the rated airflow volume with the auto airflow control drive.

Flow of External Static Pressure

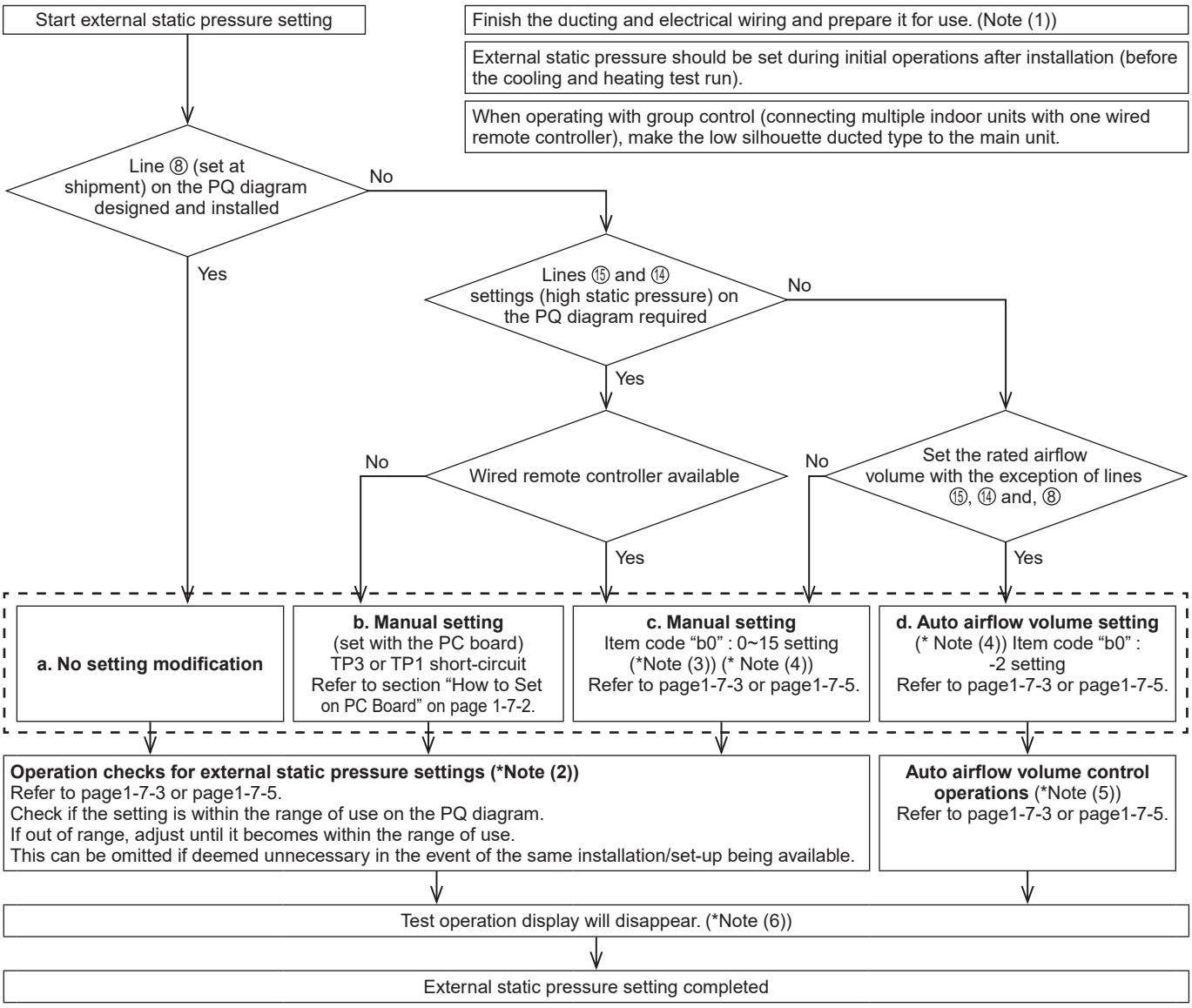

NOTE

(1) Check the following items before performing the setting-check operations or auto airflow volume operations.
   1) Check to make sure that the electrical wiring and ducting have been completed. Activate the stand-by mode. In particular, make sure that the closed damper located in the middle of the duct is open, if installed. Also, make sure that air filters have been installed inside the air inlet duct.
      Check to make sure air is not leaking from the joints.
   2) If multiple air outlets and air inlets are included, adjust the airflow volume ratio of all of them until they meet the design airflow ratio.
   3) Make sure the address setting has been completed.

(2) The operation check will be completed in approximately three minutes if the settings have been made correctly. The settings will be modified if they are out of the range of use (maximum 30 minutes.). If this is not completed within 31 minutes, check whether the air speed is set to “H” or not.

(3) Refer to Table 1-7-2 and Fig. 1-7-2 for details on the relationship between the value of item code “b0” and the external static pressure.

(4) When set in group control (connecting multiple indoor units with one wired remote controller), set each indoor unit to item code “b0”. When amending the setting after selecting [b. Manual setting] (due to airflow path changes, etc.), it is necessary to cancel [b. Manual setting] (disconnect short-circuit connector). When [b. Manual setting] has not been cancelled, [c. Manual setting] and [d. Auto airflow volume setting] will be activated if selected, but [b Manual setting] takes precedence when the power is switched back on after power outages, etc.

(5) If this is not completed within 8 minutes, check the drive mode, air speed and air inlet temperature.

(6) When set in group control (connecting multiple indoor units with one wired remote controller), the test run operations display will disappear once the external static pressure setting check or auto airflow volume control operation check have been completed for the main unit. Decisions on sub-unit complete are not possible. The test run operation display will disappear after one hour even if the external static pressure setting check or auto airflow volume control operation check have not been completed.

CAUTION

- **Be sure to check that the external static pressure is within the range for use and then make the setting. Failure to observe this may result in insufficient airflow or water leakages. Refer to Fig. 1-7-2 for the external static pressure setting range.**
- **There are cases in which automatic variable dampers and other mounted items may trigger the P12 alarm on systems that modify the external static pressure when the auto airflow volume control operations or setting check operations are carried out if high external static pressure is lowered. In this event, lower the dampers, etc., so that the external static pressure reaches its lowest level, and then carry out the auto airflow volume control operations or setting check operations.**
- **Be sure to set the [External Static Pressure Setting] once again after amending the airflow path for the duct or air outlet after setting the external static pressure.**
- **Set the air inlet temperature within the range for use. The auto airflow volume control will not function if the air inlet temperature is over 45°C or not in the fan mode.**

How to Set on PC Board

1. Turn off the power breaker to halt the supply of electricity to the PC board.
2. Open the lid of electrical component box and check where the short-circuit pin on the indoor unit control PC board is located (Fig. 1-7-1)
3. Short circuit the applicable short-circuit pin in accordance with the selected short-circuit pin connected (Fig. 1-7-2).

   150 Pa : TP3 (2P: yellow) short-circuit

   140 Pa : TP1 (2P: red) short-circuit

   * Use the short-circuit connector (2P: yellow) supplied.

Table 1-7-1 Selection of connected short-circuit pins

External static pressure at the time of rated airflow volume	Short-circuit pin
Unusable	TP6 (2P: white)
150 Pa	TP3 (2P: yellow)
140 Pa	TP1 (2P: red)

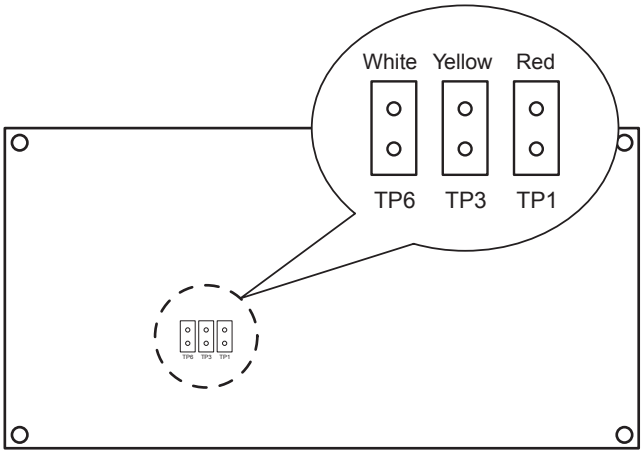

Indoor Unit control PC board

Fig. 1-7-1

Operating the High-spec Wired Remote Controller (CZ-RTC5A, CZ-RTC5B)

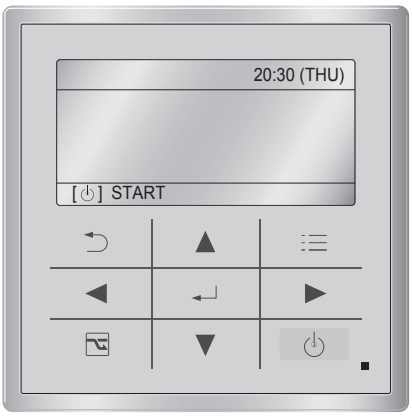

How to set the external static pressure

1. Keep pressing the [↩], [↵] and [▶] buttons simultaneously for 4 or more seconds.
   The "Maintenance func" screen appears on the LCD display.

   Maintenance func 20:30 (THU)
   1. Outdoor unit error data
   2. Service contact
   3. RC setting mode
   4.Test run
   Sel. Page [↵] Confirm

2. Press the [▼] or [▲] button to see each menu.
   If you wish to see the next screen instantly, press the [◀] or [▶] button.
   Select "8. Detailed settings" on the LCD display and press the [↵] button.

   Maintenance func 20:30 (THU)
   5. Sensor info.
   6. Servicing check
   7. Simple settings
   8. Detailed settings
   Sel. Page [↵] Confirm

   The "Detailed settings" screen appears on the LCD display.
   Select the "Unit no." by pressing the [▼] or [▲] button for changes.

   Detailed settings 20:30 (THU)

Unit no.	Code no.	Set data
1-1	10	0005

   Sel. Next

3. Select the "Code no." by pressing the [◀] or [▶] button.
   Change the "Code no." to "B0" by pressing the [▼] or [▲] button (or keeping it pressed).

   Detailed settings 20:30 (THU)

Unit no.	Code no.	Set data
1-1	B0	-001

   Sel. Next

4. Select the "Set data" by pressing the [◀] or [▶] button.
   Select one of the "Set data" among "0001" – "0015" according to the desired external static pressure setting by pressing the [▼] or [▲] button.
   Then press the [↵] button.
   (See the table below.)

   When setting to auto airflow volume control:
   Select the setting data to "-002".
   Then press the [↵] button.

Table 1-7-2 Setting the external static pressure

Indoor unit type		Item code
50, 60, 71	100, 125, 140	
External static pressure of the rated airflow volume (Pa)		**B0**
150	150	**0015**
140	140	**0014**
130	130	**0013**
120	120	**0012**
100	110	**0011**
70	100	**0008**
60	70	**0006**
50	50	**0005**
30	30	**0003**
10	10	**0001**
No auto airflow volume setting		**-001**
Auto airflow volume setting		**-002**

5. Select the "Unit no." by pressing the [◀] or [▶] button and press the [↩] button.
   The "Exit detailed settings and restart?" (Detailed setting-end) screen appears on the LCD display.
   Select "YES" and press the [↵] button.
   When the setting is completed, perform the test run for the external static pressure setting described in "Auto External Static Pressure Setting Operation".

   Exit detailed settings and restart?
   YES NO

Auto External Static Pressure Setting Operation

6. Keep pressing the [↩], [↵] and [▶] buttons simultaneously for 4 or more seconds.
   The "Maintenance func" screen appears on the LCD display.

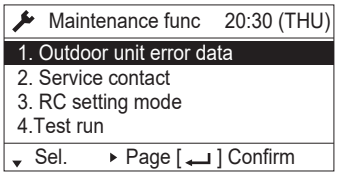

7. Press the [▼] or [▲] button to see each menu.
   If you wish to see the next screen instantly, press the [◀] or [▶] button.

   Select "4. Test run" on the LCD display and press the [↵] button.

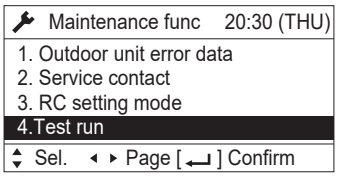

   The "Test run" screen appears on the LCD display.

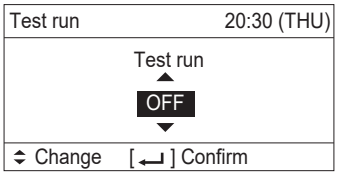

   Change the display from OFF to ON by pressing the [▼] or [▲] button. Then press the [↵] button.

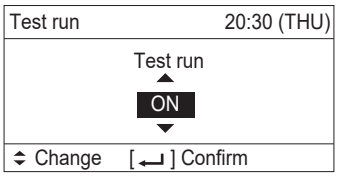

   The "Maintenance func" screen appears on the LCD display.

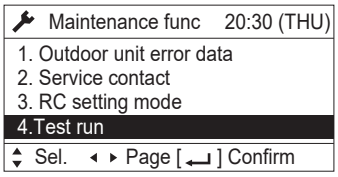

8. Press the [↩] button. "TEST" will be displayed on the LCD display.

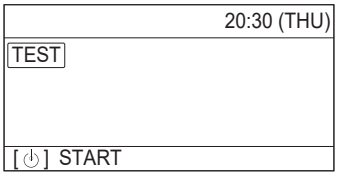

9. Press the [⏻] button. Test run will be started.
   Test run setting mode screen appears on the LCD display.

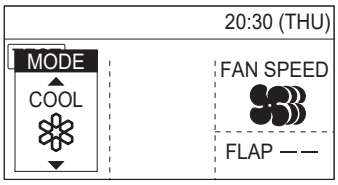

10. Set the operation mode to " " and fan speed mode to " " by pressing the [◀] or [▶] button or [▼] or [▲] button. Then press the [↵] button.

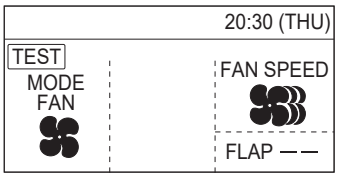

    The fan motor will be activated, the auto external static pressure setting operation and setting-check operation will be performed for about 3 to 30 minutes.
    The fan speed will change automatically while these operations are in progress. When these operations completed, "TEST" will be disappeared from the LCD display.

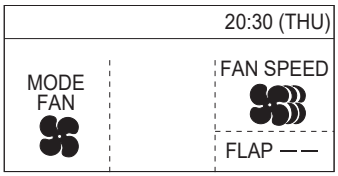

NOTE:

The auto external static pressure setting operation and setting-check operation will not be performed unless " (MODE FAN)" and " (FAN SPEED)" have been selected.

11. Press the [⏻] button.
    The LCD display will be returned to the initial screen.

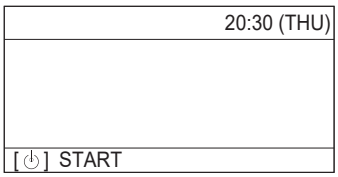

NOTE:

Failure to set this parameter may result in decreased airflow and condensation.

Operating the Timer Remote Controller (CZ-RTC4)

Setting Item Code "b0"

1. Press and hold down the , CANCEL and SET buttons simultaneously for 4 or more seconds.
   (SETTING, the Unit No., Item Code and Detailed Data will blink on the LCD display.)
2. The indoor unit numbers in the group control will be sequentially displayed whenever the Unit Select button is pressed UNIT.
   Only the fan motor for the selected indoor unit will operate during this time.
3. Specify the "b0" item code by pressing the ▽ / △ buttons for the temperature setting buttons and confirm the values.
   ("-001" set at shipment)
4. Press the DAY/ / /TIMER buttons for the time to amend the values for the set data.
   Refer to Table 1-7-3 and Fig. 1-7-2 and select a value between "0001" and "0015".
   Select "-002" if the auto airflow volume setting is activated.
5. Press the SET button.
   The display will stop blinking and remain illuminated.
6. Press the button. The fan motor will stop operating and the LCD display will return to the normal stop mode.

Auto Airflow Volume Control Operations and External Static Pressure Setting-Check Operation

1. Press and hold down the button for 4 or more seconds.
   "TEST" will be displayed on the LCD display.
2. Press the button to start the test run.
3. Select the operation mode (Fan) by pressing the (Mode select) button.
   Then select the fan speed by pressing the (Fan speed) button.

NOTE

Auto airflow volume control operations and external static pressure setting-check operations will not be performed unless the above settings are made.

4. The fan motor will be activated and auto airflow volume control operations or external static pressure setting-check operations will be started.
   The power of the airflow will change while these operations are in progress.
   The external static pressure setting-check operations and auto airflow volume control operations will be completed in about 3 to 30 minutes.
   "TEST" display will be disappeared from the LCD display.
5. Press the button to halt the test run.

Table 1-7-3 Setting the external static pressure

Indoor unit type		Item code
50, 60, 71	100, 125, 140	b0
External static pressure of the rated airflow volume (Pa)		
150	150	0015
140	140	0014
130	130	0013
120	120	0012
100	110	0011
70	100	0008
60	70	0006
50	50	0005
30	30	0003
10	10	0001
No auto airflow volume setting		-001
Auto airflow volume setting		-002

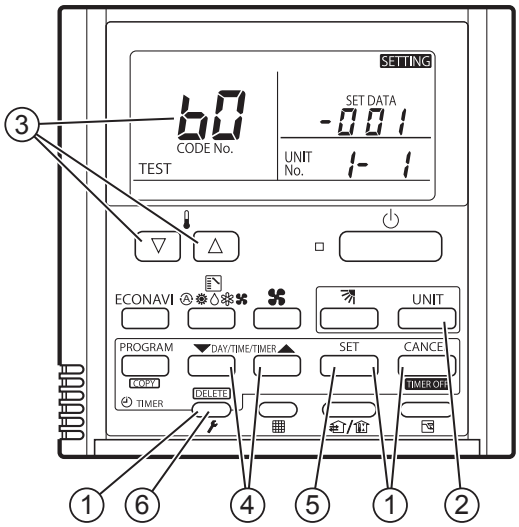

*Failure to set this parameter may result in decreased airflow and condensation.

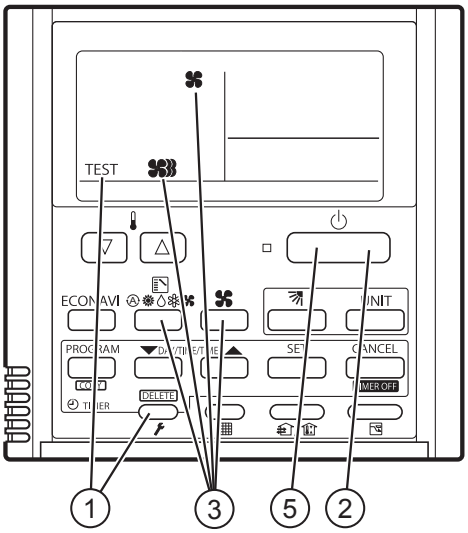

Indoor Fan Performance

		Item code "60"																			
		00 15		00 14		00 13		00 12		00 11		00 08		00 06		00 05		00 03		00 01	
		Cooling	Heating	Cooling	Heating	Cooling	Heating	Cooling	Heating	Cooling	Heating	Cooling	Heating	Cooling	Heating	Cooling	Heating	Cooling	Heating	Cooling	Heating
Tap	⑮	H	H									Setting at shipment									
	⑭			H	H																
	⑬	M	M			H	H														
	⑫							H	H												
	⑪				M					H	H										
	⑧			M			M	M	M			H	H								
	⑥	L	L			M				M	M			H	H						
	⑤											M	M			H	H				
	③				L		L	L	L	L	L			M	M	M	M	H	H		
	①			L		L						L	L	L	L			M	M	H	H
	①-2															L	L	L	L	M	M
	①-3																			L	L

Type 50

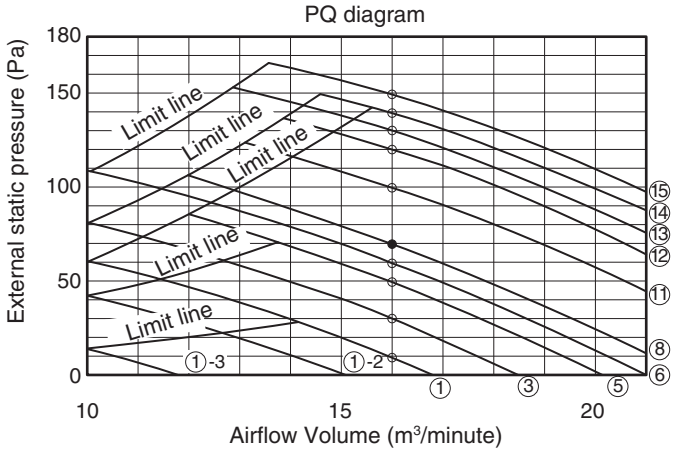

Type 125

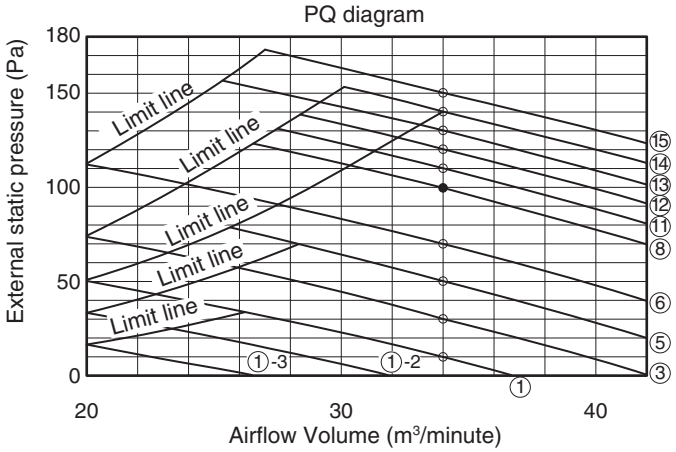

Type 60, 71

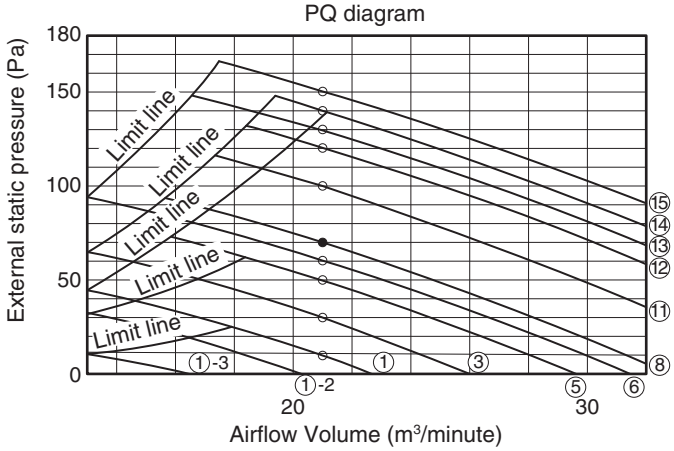

Type 140

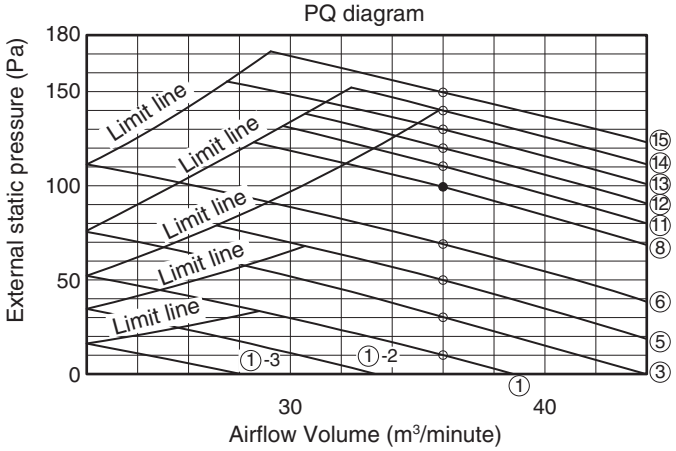

Type 100

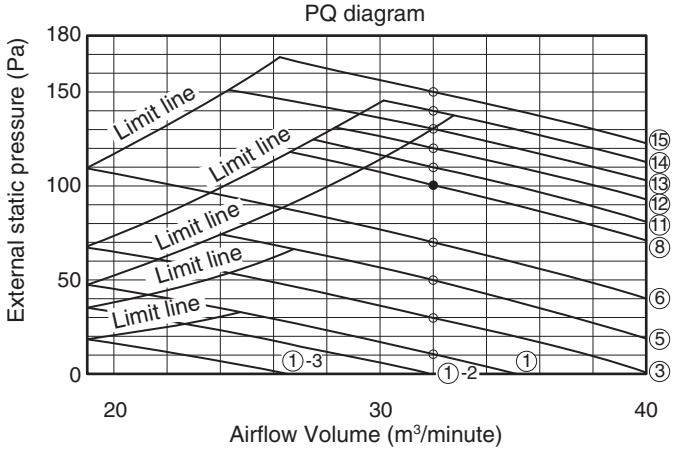

Fig. 1-7-2

1-8. Airflow Distance Chart

4-Way Cassette (Type U2)

S-50PU2E5B

Heating : Distribution of wind velocity

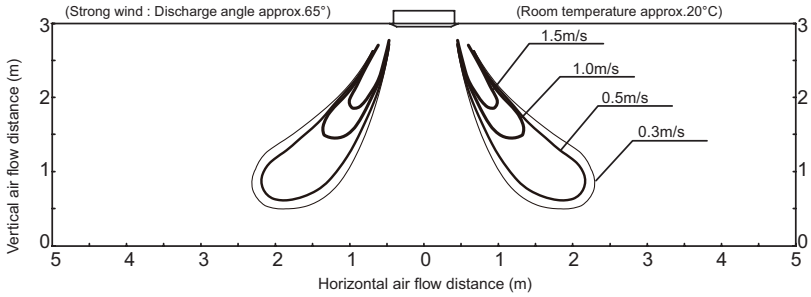

Heating : Distribution of temperature

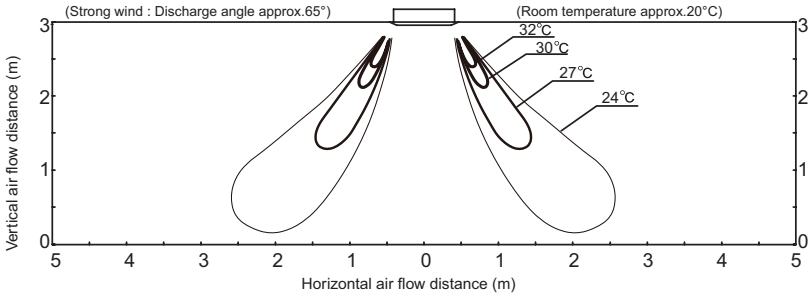

Cooling : Distribution of wind velocity

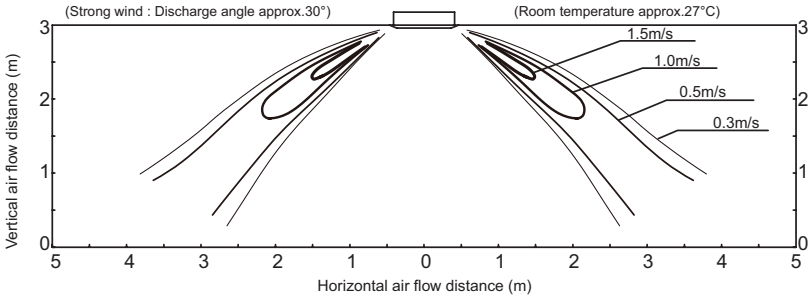

Cooling : Distribution of temperature

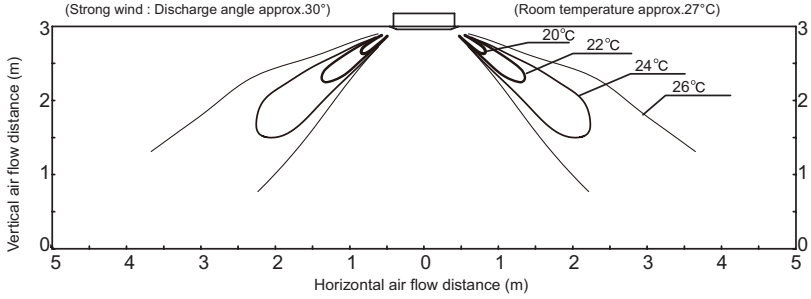

4-Way Cassette (Type U2)

S-60PU2E5B / 71PU2E5B

Heating : Distribution of wind velocity

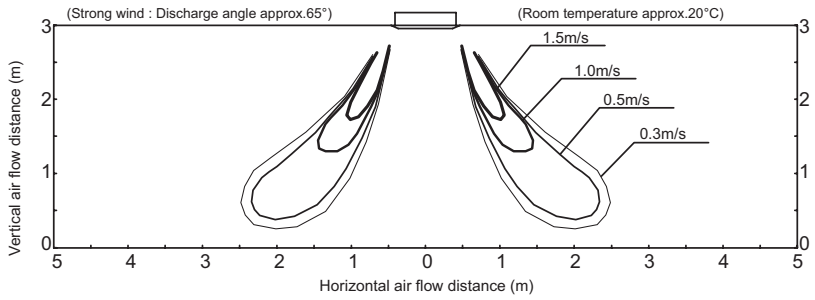

Heating : Distribution of temperature

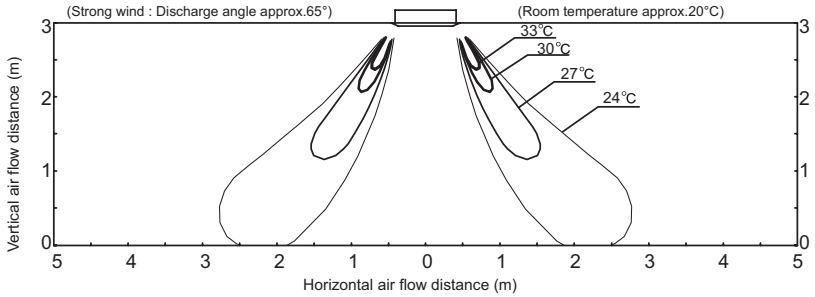

Cooling : Distribution of wind velocity

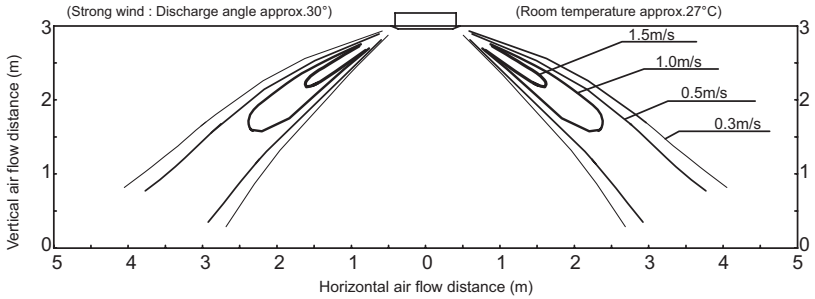

Cooling : Distribution of temperature

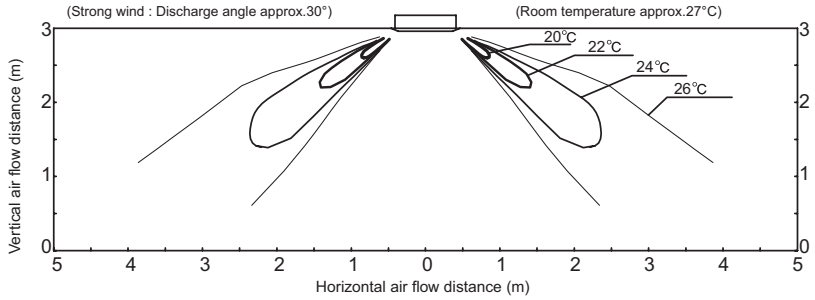

4-Way Cassette (Type U2)

S-100PU2E5B / 125PU2E5B / 140PU2E5B

Heating : Distribution of wind velocity

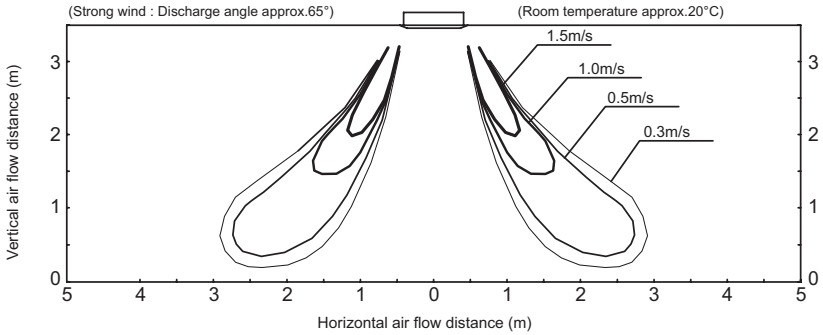

Heating : Distribution of temperature

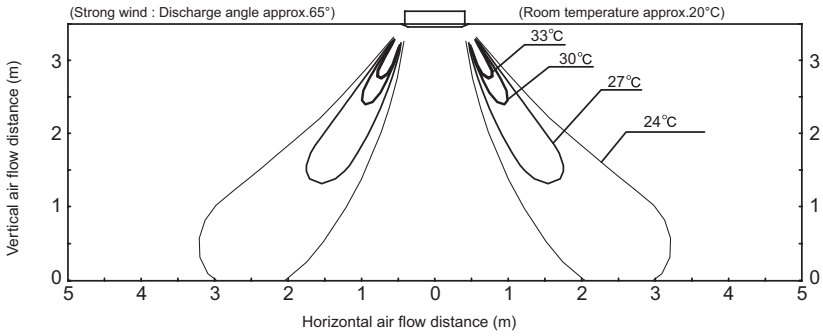

Cooling : Distribution of wind velocity

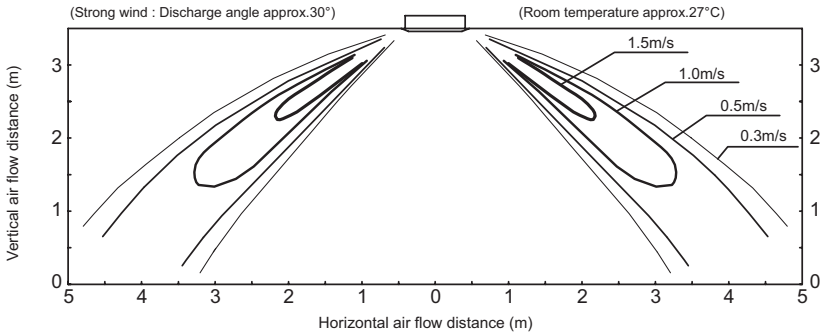

Cooling : Distribution of temperature

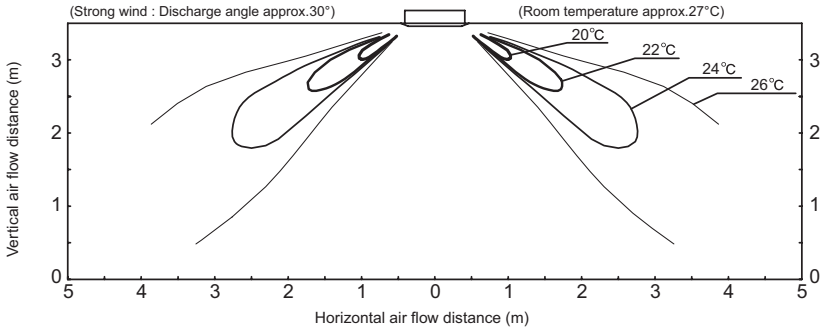

Ceiling (Type T2)

S-50PT2E5B

Heating : Distribution of wind velocity

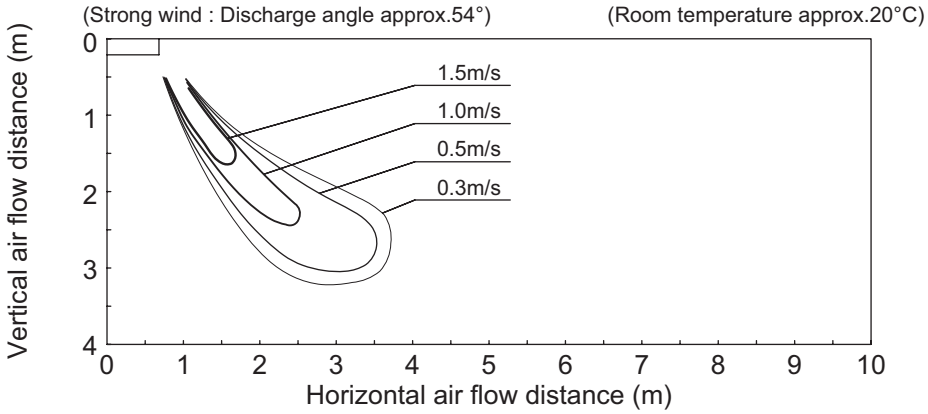

Heating : Distribution of temperature

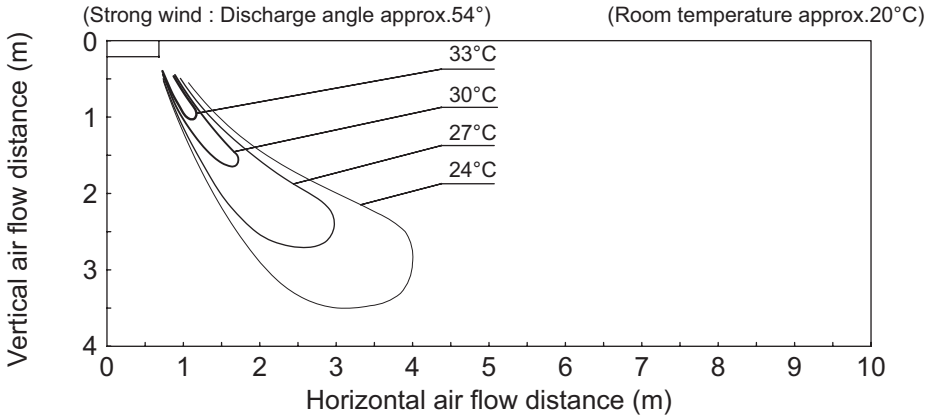

Cooling : Distribution of wind velocity

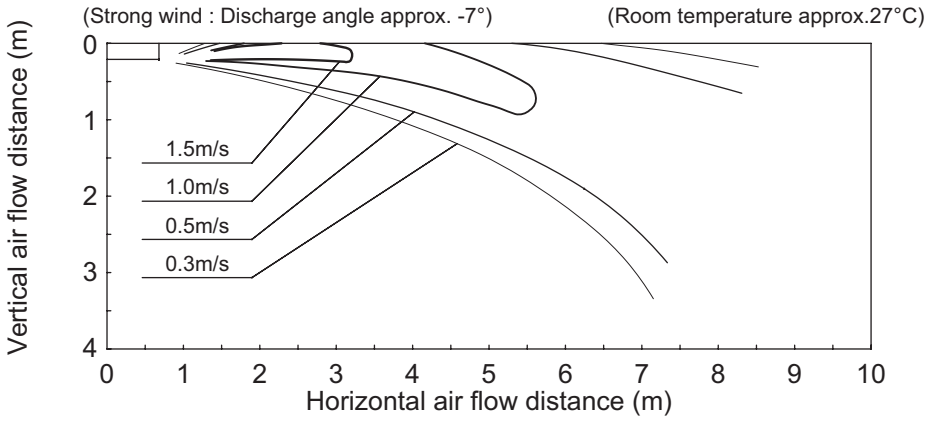

Cooling : Distribution of temperature

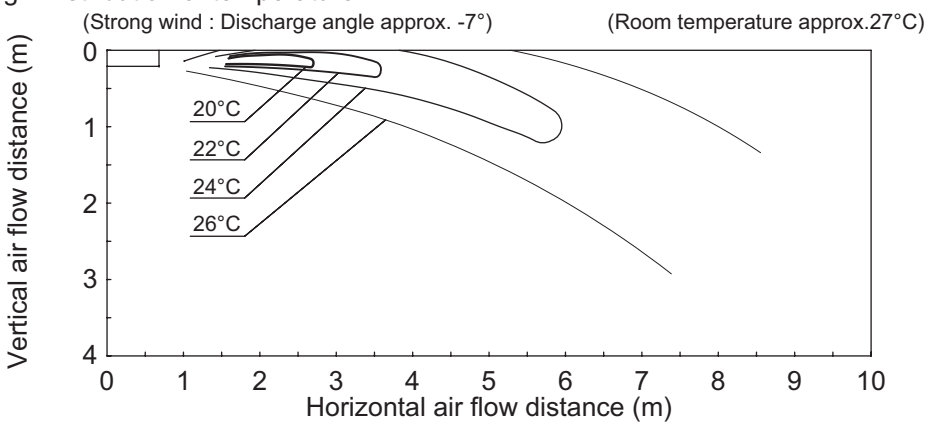

Ceiling (Type T2)

S-60PT2E5B / 71PT2E5B

Heating : Distribution of wind velocity

(Strong wind : Discharge angle approx.54°) (Room temperature approx.20°C)

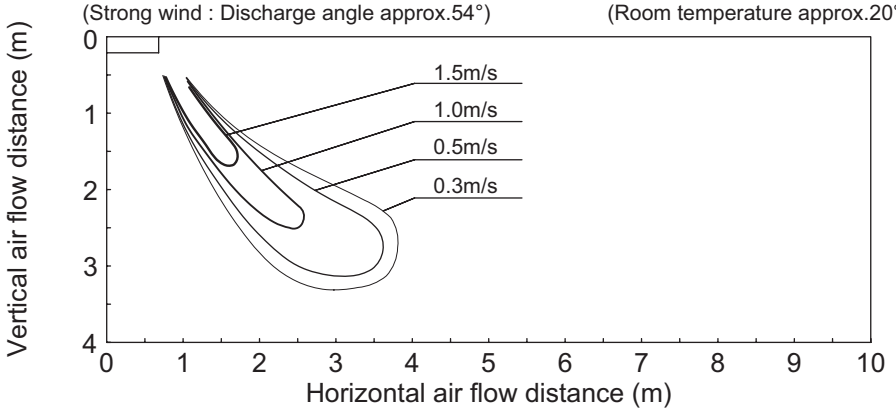

Heating : Distribution of temperature

(Strong wind : Discharge angle approx.54°) (Room temperature approx.20°C)

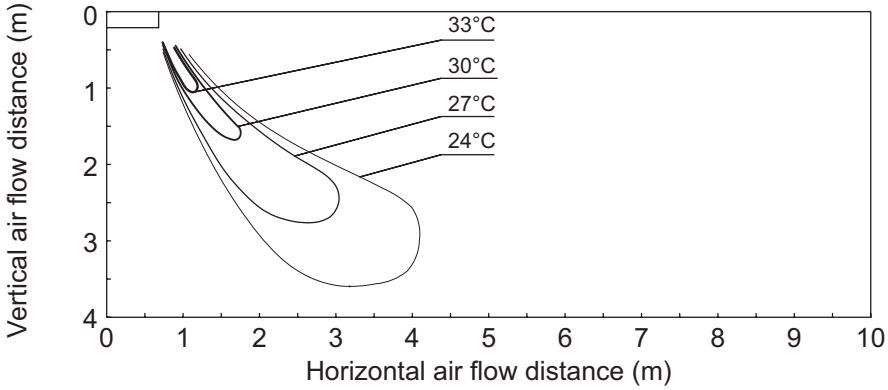

Cooling : Distribution of wind velocity

(Strong wind : Discharge angle approx. -7°) (Room temperature approx.27°C)

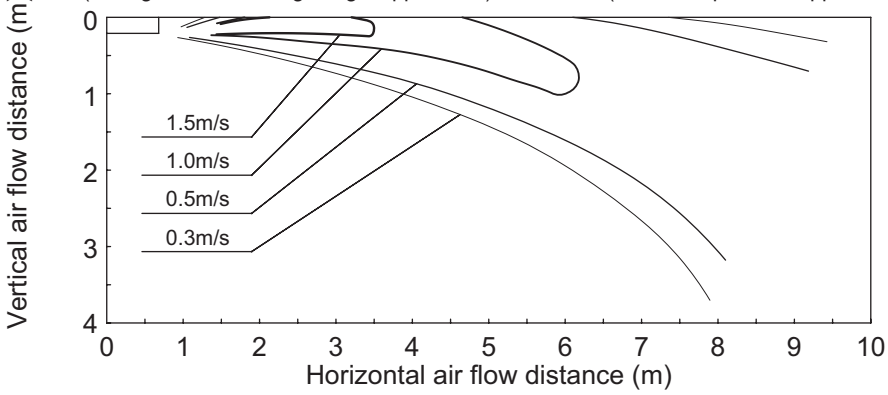

Cooling : Distribution of temperature

(Strong wind : Discharge angle approx. -7°) (Room temperature approx.27°C)

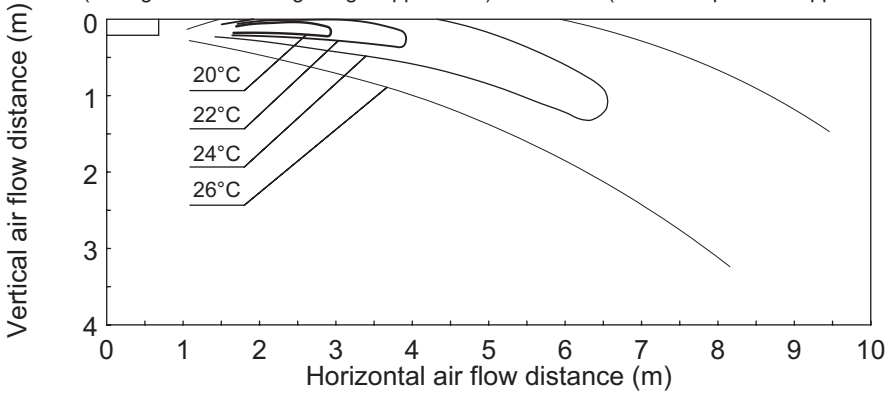

Ceiling (Type T2)

S-100PT2E5B / 125PT2E5B / 140PT2E5B

Heating : Distribution of wind velocity

(Strong wind : Discharge angle approx.54°) (Room temperature approx.20°C)

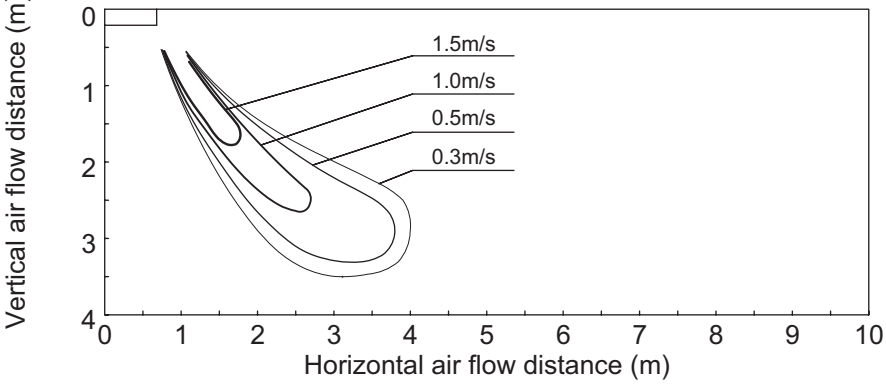

Heating : Distribution of temperature

(Strong wind : Discharge angle approx.54°) (Room temperature approx.20°C)

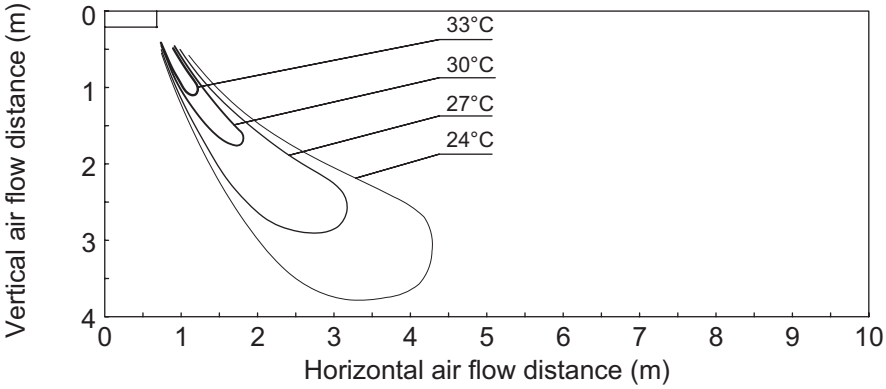

Cooling : Distribution of wind velocity

(Strong wind : Discharge angle approx. -7°) (Room temperature approx.27°C)

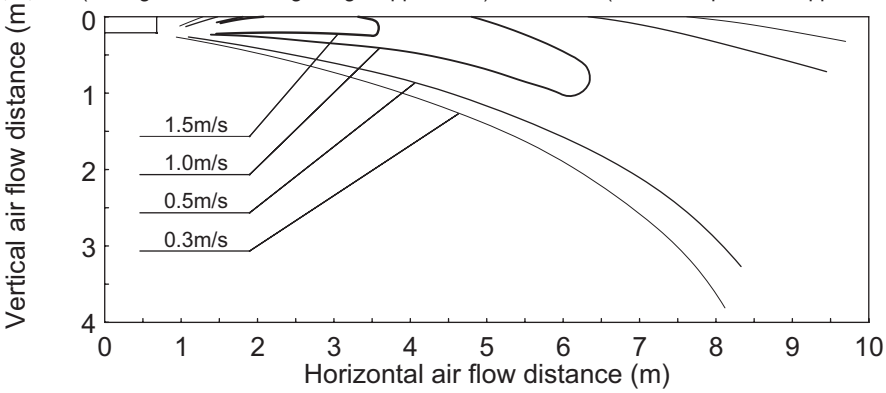

Cooling : Distribution of temperature

(Strong wind : Discharge angle approx. -7°) (Room temperature approx.27°C)

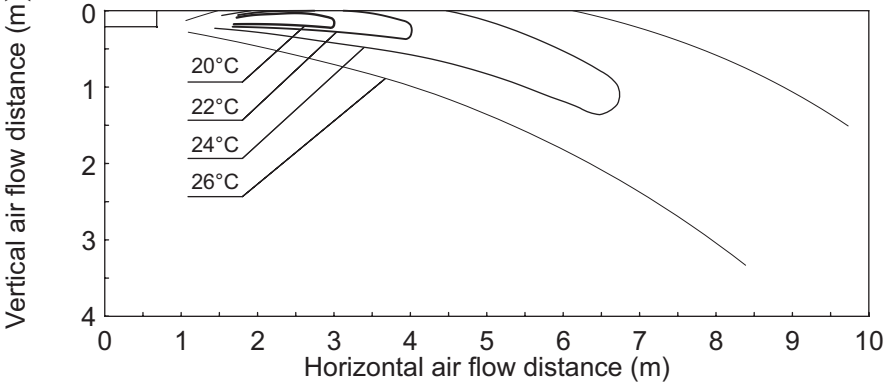

Wall Mounted (Type K2)

S-50PK2E5B

Heating : Distribution of wind velocity

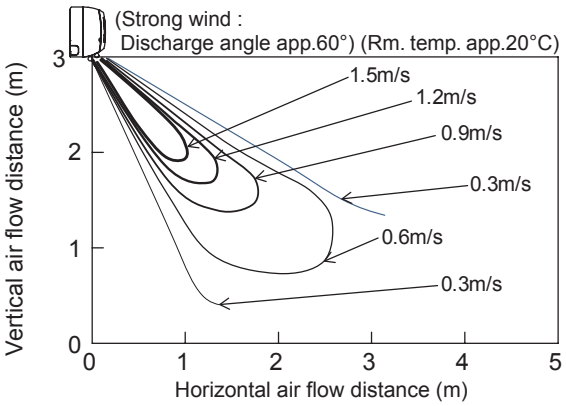

Heating : Distribution of temperature

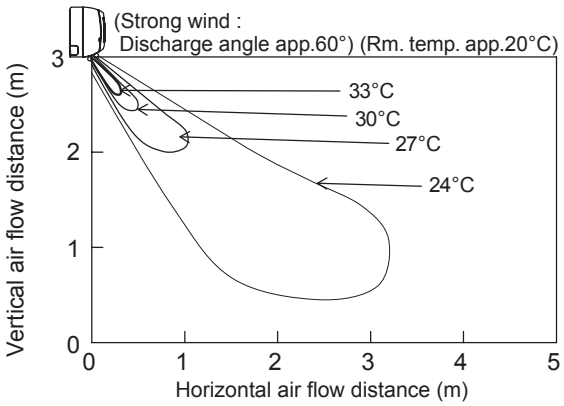

Cooling : Distribution of wind velocity

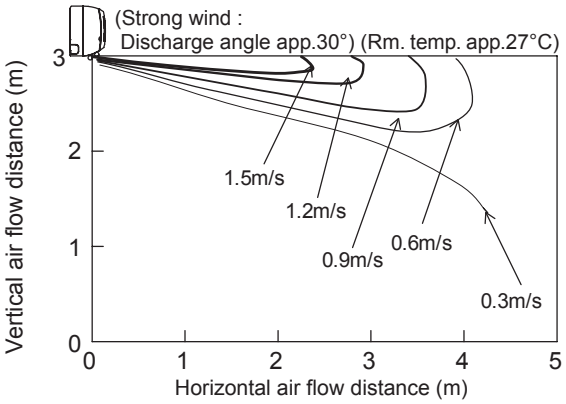

Cooling : Distribution of temperature

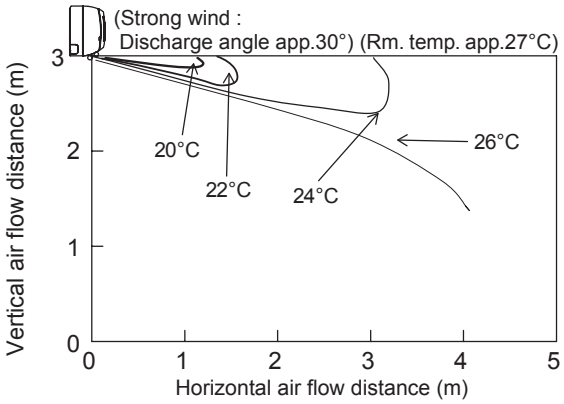

Wall Mounted (Type K2)

S-60PK2E5B / 71PK2E5B

Heating : Distribution of wind velocity

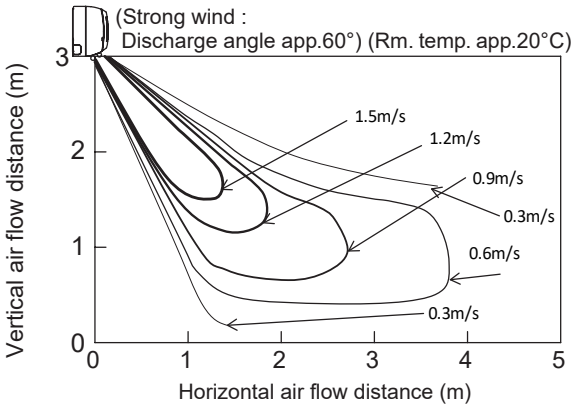

Heating : Distribution of temperature

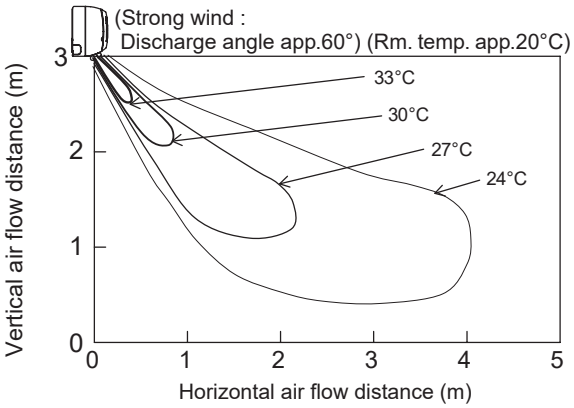

Cooling : Distribution of wind velocity

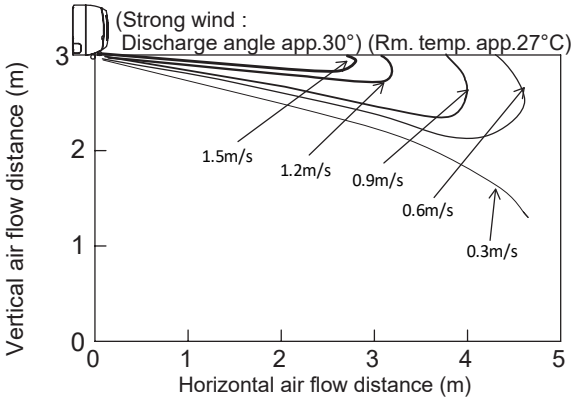

Cooling : Distribution of temperature

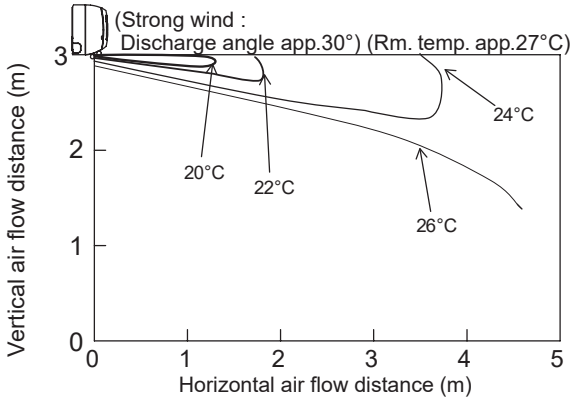

S-100PK2E5B

Heating : Distribution of wind velocity

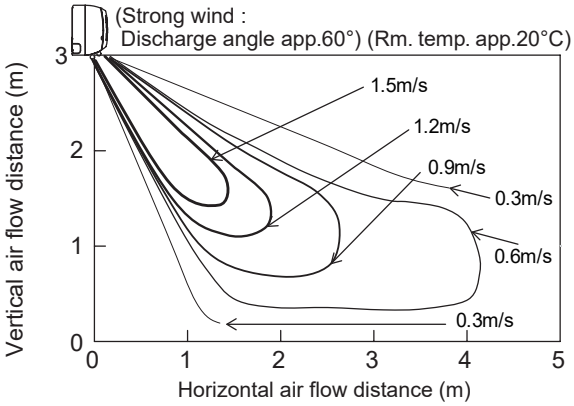

Heating : Distribution of temperature

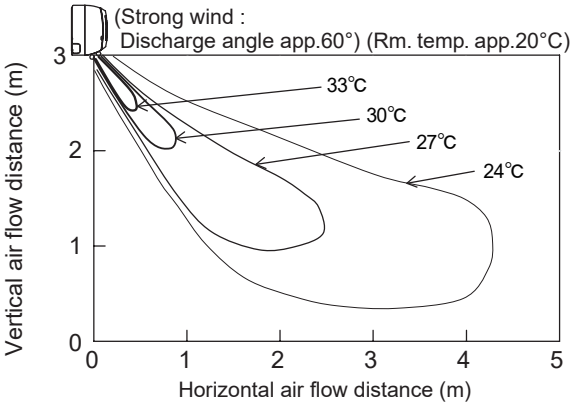

Cooling : Distribution of wind velocity

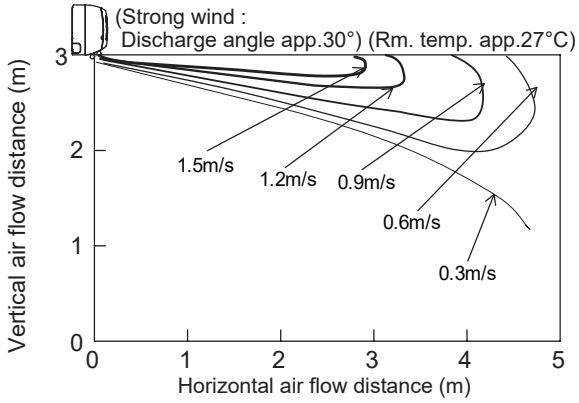

Cooling : Distribution of temperature

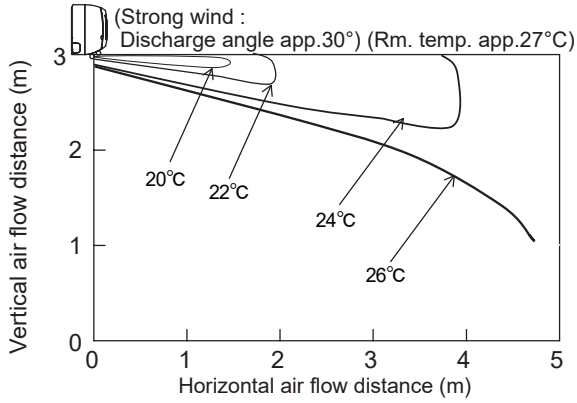

1-9. Fresh Air Intake

1-9-1. Precautions Regarding External Air Intake

(1) Ventilation Load

Ensure that the design of the air-conditioner takes air-conditioning loads into consideration when external air intake is involved.

(2) Restrictions on External Air Intake

Ensure that the design conforms to the restrictions on air intake volume stipulated in accordance with the model of the indoor unit and the intake method. Consideration must also be taken to mixed air content listed in (3) below without fail.

* If the air intake volume does not satisfy the required ventilation volume, air must be fed into the room separately with the use of a total heat exchanger or a fresh air processing air-conditioner, etc.

(3) Mixed Air

The amount of external air intake must be set within the scope of the unit's usage conditions when external air and internal air is mixed together. This is especially important in the following cases, in which it is necessary to either feed external air into the room after it has been processed or reduce the amount of external air that is fed in.

① When the external dew-point temperature is greater than the dry-bulb temperature of the air sucked into the unit
Ensure that processing is performed so that the external dew-point temperature is lower than the temperature of the air sucked into the unit to prevent the risk of condensation building up.

② In the case of low external temperatures
There are cases in which the temperature of mixed air is lower than the operating range of the unit if excessive amounts of external air intake are used when the external temperature is low.
This problem is to be solved by either feeding external air into the room after it has been processed or reducing the amount of external air that is fed in.

③ When used in combination with humidifiers
External air must always be processed when the external air temperature reaches freezing point to prevent the risk of the humidifier freezing.

(4) Arranging Ducts and Filters in the Field

External air intake ducting must be arranged in the field.
External air filters must also be installed without fail in order to prevent the intake of dust and grit.

(5) Thermal Insulation for Ducts

Ensure that all external air intake ducting is heat-insulated without fail. Failure to observe this may result in the build-up of condensation.

(6) External Air Intake Coupling

Ensure that the design for external air intake is coupled with the fan blower operations of the indoor unit.
There are cases in which the dust that accumulates in the filter is blown into the room if the external air is fed from the filter. There are also cases in which the noise of external air being fed into the room can be heard from the indoor unit if external air is forcibly fed when the booster fan or other components on the indoor unit are not operating.

(7) Booster Fan Selection

Select the booster fan in accordance with the resistance of the external air intake duct (diagram on the pressure loss characteristics of the air flow volume for flexible cylindrical ducts) and the resistance prevalent inside the unit (external air intake volume & resistance within unit / operation noise characteristics).

(8) Attaching the External Air Intake Flange

Regarding the installation direction of the external air intake duct, refer to the Installation Instructions provided with the external air intake duct.

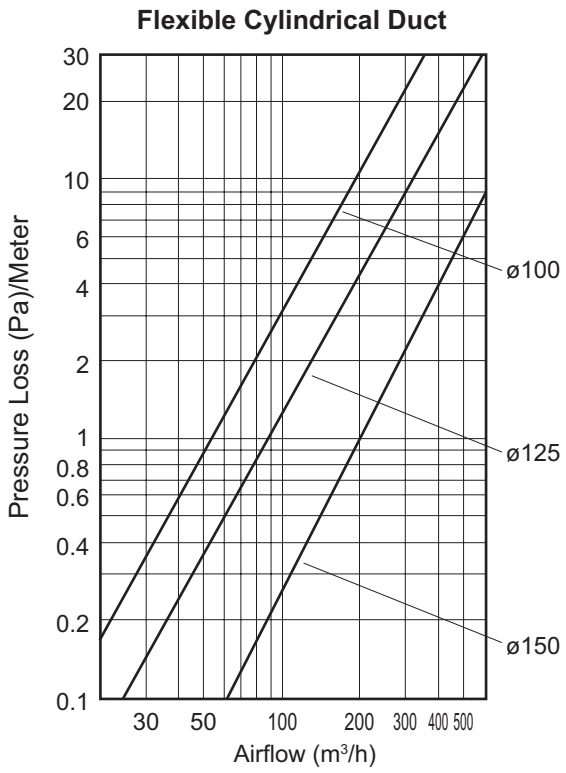

Air Flow Volume for Flexible Cylindrical Duct-Pressure Loss

1-9-2. External Air Intake Volume & Resistance Within Unit / Operation Noise Characteristics

● 4-Way Cassette (Type U2)

When an External Air Intake Flange (ø100) is in Use

External Air Intake Volume and Resistance and Operation Noise Characteristics within the Unit

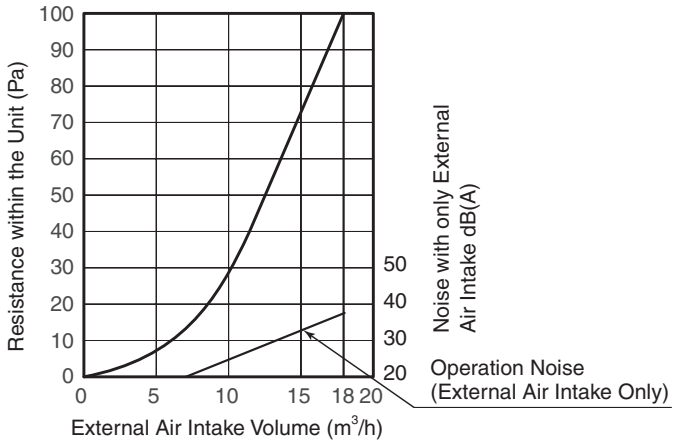

With the External Air Intake Flange Attached

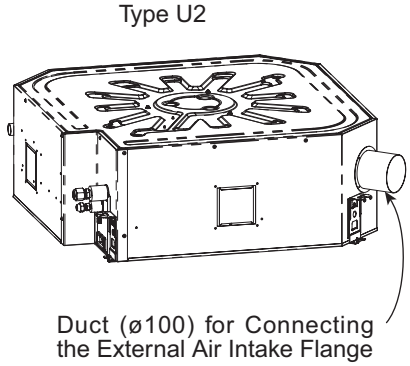

- Calculate the operation noise when external air is being fed by combining the noise when only external air is being fed as shown in the graph for operation noise characteristics and the operation noise of the unit as stipulated in the catalogue.
- The operation noise conforms to JIS standards and constitute measurements taken in an anechoic chamber 1.5 m directly beneath the indoor unit. Under normal circumstances, the values shown here are greater owing to the effects of surrounding noise and reverberation when the unit is actually installed.

The amount of external air that is possible to feed when it is fed directly into the unit (ø100)

Type	50	60	71	100	125	140
Permissible Air Intake Volume (m³/h)	15	17	18	18	18	18

NOTE

The operation noise for models that use small units is lower, so use values that are within the range shown in the above table. Using values that exceed these will result in noise when only external air is fed being louder than the noise emitted from the unit.

CAUTION **Use the following diagram along with the section "1-9-1. Precautions Regarding External Air Intake"**

1-9-2-1. In a Case of External Air Intake Using Air Intake Chamber (CZ-FDU3+CZ-ATU2)

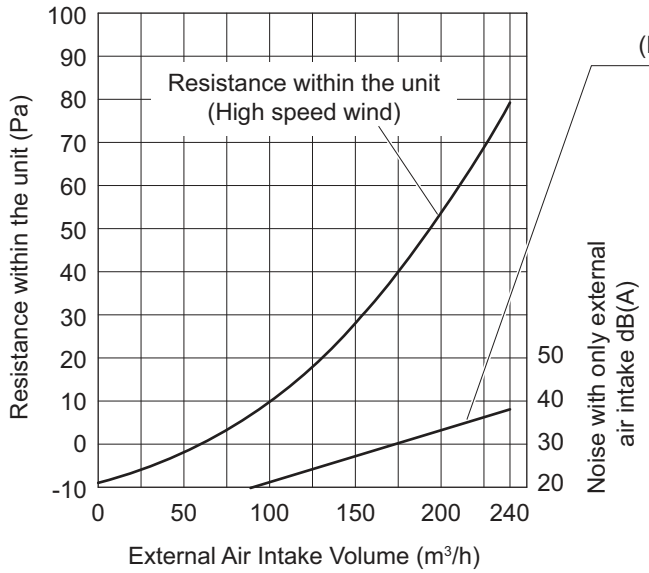

External Air Intake Volume & Resistance Within Unit/ Operation Noise Characteristics

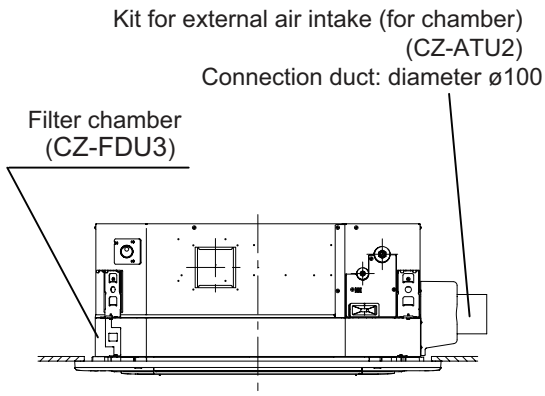

With the External Air Intake Chamber Attached

1. Calculate the operation noise when external air is being fed by combining the noise when only external air is being fed as shown in the diagram for operation noise characteristics and the operation noise of the unit as stipulated in the catalogue.
2. The operation noise conforms to JIS standards and constitute measurements taken in an anechoic chamber 1.5m directly below the indoor unit. Under normal circumstances, the diagram shown above is greater owing to the effects of surrounding noise and reverberation when the unit is actually installed.

The amount of external air that is possible to feed when external air intake chamber is in use (CZ-FDU3+CZ-ATU2)

Type	50	60	71	100	125	140
Permissible air intake volume (m^3/h)	180	190	240	240	240	240

* The operation noise for models that use small units is lower, so use values that are within the range shown in the above table. Using values that exceed these will result in noise when only external air is fed being louder than the noise emitted from the unit.

● **Sample selection of booster fans**

In a case of necessity at 200m^3/h of external air intake:

1. Resistance within the unit Diagram from "Resistance within the unit" 55 Pa
2. Duct resistance in case of duct with 4m length

Duct resistance	Diagram from "Air Flow Volume for Flexible Cylindrical Duct-Pressure Loss"	40 Pa	(=10 Pa/m x 4m)
		Total 95 Pa	

Therefore, a booster is required to save a total 95 Pa of static pressure.

1-9-2. External Air Intake Volume & Resistance Within Unit / Operation Noise Characteristics (continued)

● **Ceiling (Type T2)**

1-9-2-1. In a Case of External Air Intake to Unit Directly (Using external air intake cylindrical flange)

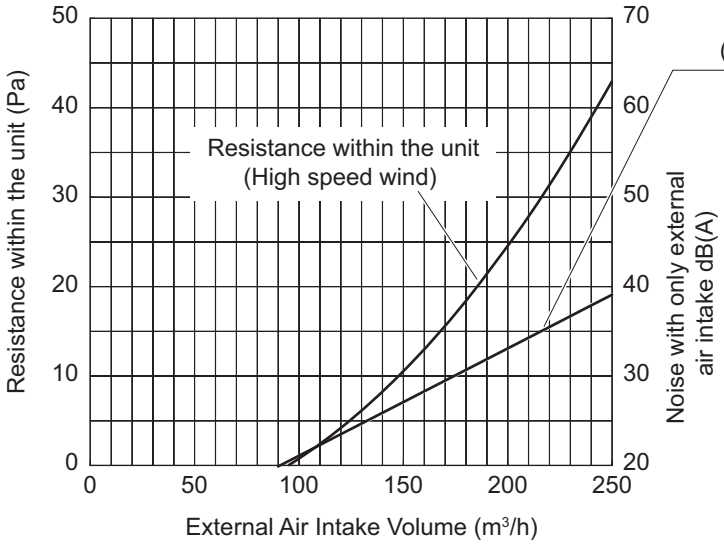

External Air Intake Volume & Resistance Within Unit/ Operation Noise Characteristics

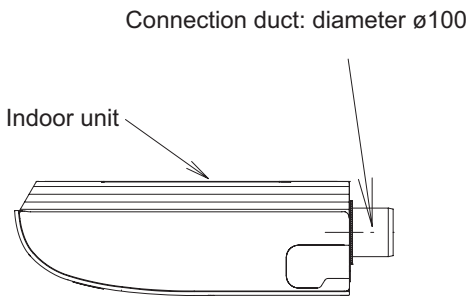

With the External Air Intake Flange Attached

1. Calculate the operation noise when external air is being fed by combining the noise when only external air is being fed as shown in the diagram for operation noise characteristics and the operation noise of the unit as stipulated in the catalogue.
2. The operation noise conforms to JIS standards and constitute measurements taken in an anechoic chamber 1m front and 1m below the indoor unit. Under normal circumstances, the diagram shown above is greater owing to the effects of surrounding noise and reverberation when the unit is actually installed.

The amount of external air intake that is possible to feed when it is fed directly into the unit

Type	50	60	71	100	125	140
Permissible air intake volume (m^3/h)	170	200	210	240	240	240

* The operation noise for models that use small units is lower, so use values that are within the range shown in the above table. Using values that exceed these will result in noise when only external air is fed being louder than the noise emitted from the unit.

1-9-2. External Air Intake Volume & Resistance Within Unit / Operation Noise Characteristics (continued)

- **Low Silhouette Ducted (Type F1)**

1-9-2-2. In a Case of External Air Intake to Unit Directly (Using external air intake cylindrical flange)

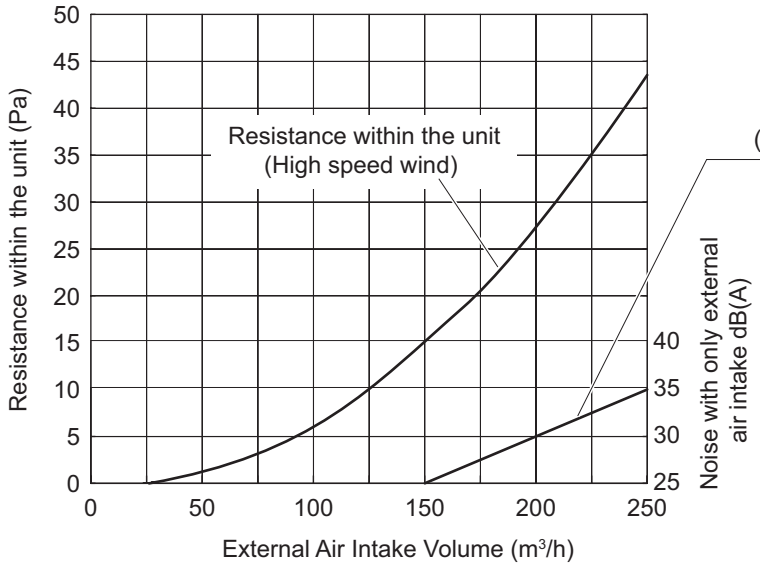

External Air Intake Volume & Resistance Within Unit/ Operation Noise Characteristics

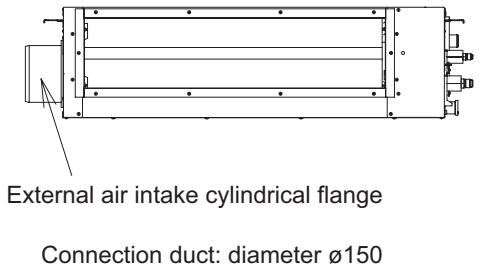

With the External Air Intake Flange Attached

1. Calculate the operation noise if external air is being fed by combining the noise when only external air is being fed as shown in the diagram for operation noise characteristics and the operation noise of the unit as stipulated in the catalogue.
2. The operation noise conforms to JIS standards and constitute measurements taken in an anechoic chamber 1.5m directly below the indoor unit. Under normal circumstances, the diagram shown above is greater owing to the effects of surrounding noise and reverberation when the unit is actually installed.

The amount of external air intake that is possible to feed when it is fed directly into the unit

Type	50	60	71	100	125	140
Permissible air intake volume (m^3/h)	150	180	180	240	240	240

* The operation noise for models that use small units is lower, so use values that are within the range shown in the above table. Using values that exceed these will result in noise when only external air is fed being louder than the noise emitted from the unit.

1-10. Electrical Wiring

● U-100PZ2E5, U-125PZ2E5, U-140PZ2E5
U-100PZ2E8, U-125PZ2E8, U-140PZ2E8

ELECTRICAL WIRING

⚠ Warning	This air conditioner must be installed in accordance with national wiring regulations.
	Cables connected to outdoor unit must be approved polychloroprene sheathed type 60245 IEC 57 or H05RN-F/H07RN-F or heavier.
	The units must be connected to the supply cables for fixed wiring by qualified technician. Circuit breaker must be incorporated in the fixed wiring in accordance with the national wiring regulations. The circuit breaker must be approved, suitable for the voltage and current ratings of equipment and have a contact separation by 3mm in all poles. When the supply cable is damaged, it must be replaced by qualified technician.
	Be sure to install a current leakage breaker, main switch and fuse to the main power supply, otherwise electric shocks may result.
	Be sure to connect the unit to secure earth connection. If the earthing work is not carried out properly, electric shocks may result. ⏚
	Wiring shall be connected securely by using specified cables and fix them securely so that external force of the cables may not transfer to the terminal connection section. Imperfect connection and fixing leads to fire, etc.

- Ensure to connect the electrical cable connections and clamp the wires securely to the terminal connections using cord clamps so that no undue force is placed on the wires (power source cable, indoor/outdoor connection cables, earth lead wire).
- Do not install a phase advance capacitor for power factor improvement. (It does not improve the power factor and will cause abnormal overheating.)
- Do not bind the excess cables together and place them inside this unit.
- Protect the electrical cable with the protective bushing provided so that the cables do no get damaged on the knock hole or etched portions. If there is space between the electrical cables and the protective bushing occurs, seal it accordingly.
- Tie the cables with the provided binding strap so that they do not touch the compressor and the pipes.
- When setting up the cables, inside of unit install properly so that the front panel will not lift up. Make sure that front panel mount correctly.
- Use a round type terminal with an insulation sleeve for connecting to the terminal block.
- Use the appropriate screwdriver for tightening the terminal screws. Small sized screwdriver damages the head of the screw and cannot tighten it properly.
- There is risk of damaging the screw if the terminal screw is over tightened. Tighten with the appropriate torque.

Screw diameter name	Tightening torque N•m(kgf•cm)
M4	1.57~1.96 (16~20)
M5	1.96~2.45 (20~25)

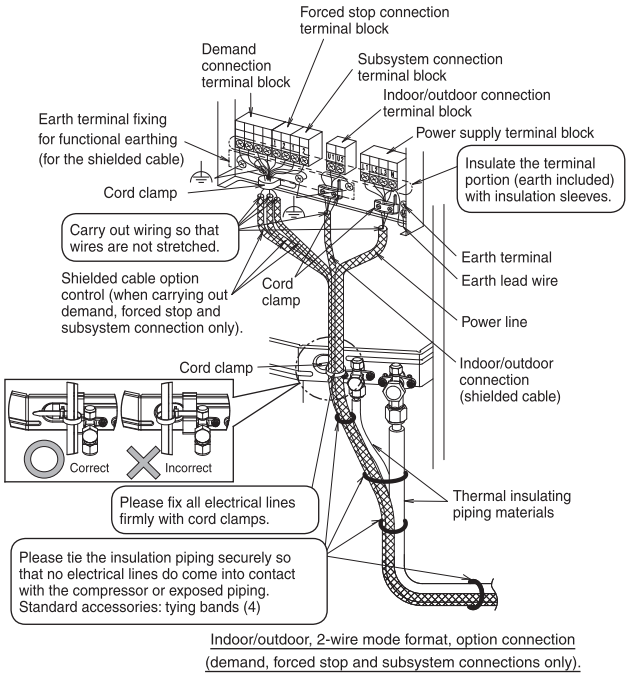

Indoor/outdoor, 2-wire mode format, option connection (demand, forced stop and subsystem connections only).

- Direction to pull out wires

Seal wiring holes after wiring using included protection bush. (other holes are for connecting conduit pipe)

- Earth lead wire set up

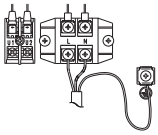

The earth lead wire shall be longer than other lead wires as shown in the figure for electrical safety in case it slips out of the cord from the anchorage.

- Be sure to connect the wires correctly to terminal board with connecting the crimp type ring terminal to the wires.
- If connecting two separate wires to a single crimped terminal, place the two crimped terminal wires together as shown in Fig. A.
(If the arrangement shown in Fig. B is used, poor contacts or contact damage may result.)

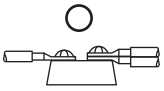

Fig. A (OK)

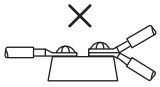

Fig. B (not OK)

OUTDOOR UNIT/3-PHASE MODEL

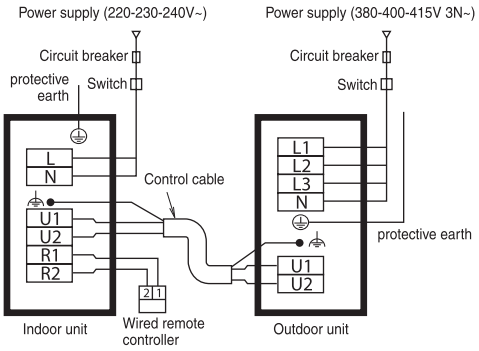

OUTDOOR UNIT/SINGLE-PHASE MODEL

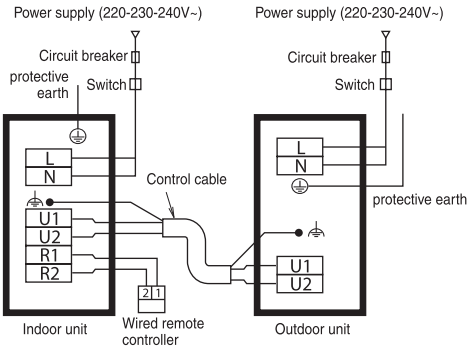

This equipment complies with EN/IEC 61000-3-12 provided that the short-circuit power Ssc is greater than or equals to ※2 kVA at the interface point between the user's supply and the public system. It is the responsibility of the installer or user of the equipment to ensure; by consultation with the distribution network operator if necessary that the equipment is connected only to supply with a short-circuit power Ssc greater than or equals to ※2 kVA.

Ssc : Short circuit power

: functional earthing (for the shielded cable)

Model name	Power supply	Time delay fuse or circuit capacity	※1 Control cable	※2 Ssc
U-100PZ2E5	220-230-240V~	30A	0.75mm^2	4750kVA
U-125PZ2E5	220-230-240V~	35A	0.75mm^2	5500kVA
U-140PZ2E5	220-230-240V~	40A	0.75mm^2	5650kVA
U-100PZ2E8	380-400-415V 3N~	15A	0.75mm^2	※3
U-125PZ2E8	380-400-415V 3N~	15A	0.75mm^2	※3
U-140PZ2E8	380-400-415V 3N~	15A	0.75mm^2	※3

※1 Use a shielded cable for the control cable. Overall extension less than 500m
※3 Intended for professional use. Permission from the power supplier is required when installing the U-100PZ2E8, U-125PZ2E8, U-140PZ2E8 outdoor units that are connected to a 16 A distribution network.

- The product meets the technical requirements of EN/IEC 61000-3-3.
- Decide the length and size of the power supply cable based on the maximum ampere tabulated above in accordance with the national wiring regulations.
- Select the fuse(s) and/or circuit breaker(s) from the types and ratings suitable for the maximum ampere tabulated above in accordance with the national wiring regulations.
- If capacity of power supply circuit and enforcement are not enough, it can causes the electric shock and a fire.

For the shield part of the shielded cable, twist the end out, crimp it with a round terminal, and connect it to the functional earthing screw.
After crimping it with a round terminal, wrap it with insulating tape so there are no spaces and adjust it so the shield part does not touch any live parts.

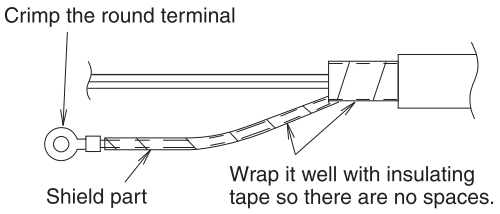

⚠ **Caution**	Be sure that the shield part of the shielded cable does not touch the terminal block or any live parts. Failure to do so may lead to electric shock or fire.

Panasonic

ACXF60-30051

ENGLISH

CONNECTION FOR DEMAND AND FORCED STOP

1. CONNECTION PROCEDURE

Be sure to always turn the power off first when setting up the wire and cable connections.
Failure to do so may lead to electric shock or unit failure.

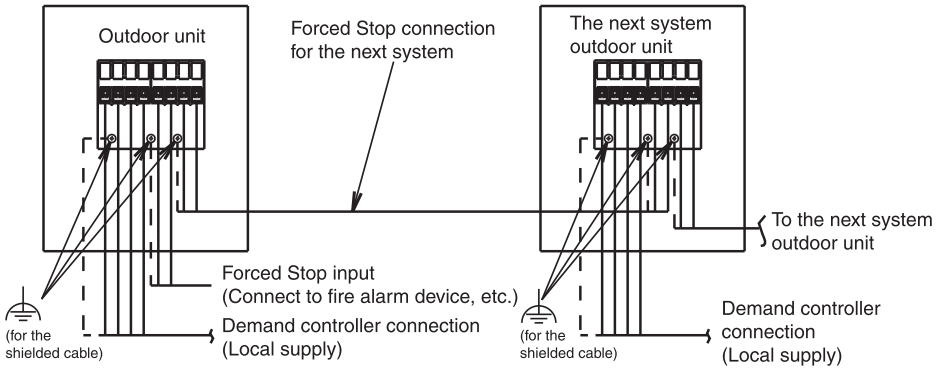

The demand terminal set up is shown in the following illustration.

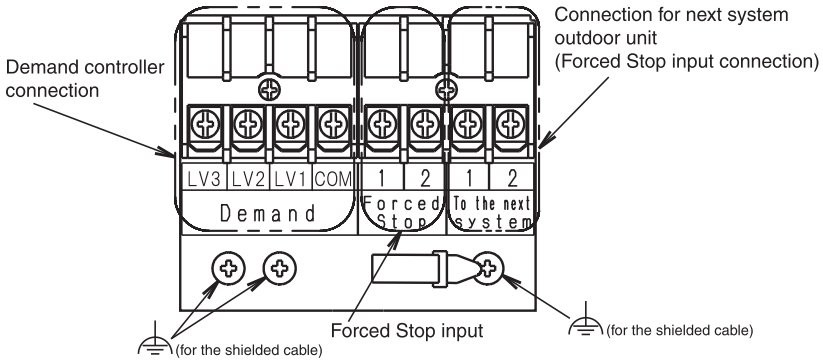

- Use a shielded cable for the cable connection.

For the shield part of the shielded cable twist the end out, crimp it with a round terminal, and connect it to the functional earthing screw.
After crimping it with a round terminal, wrap it with insulating tape so there are no spaces and adjust it so the shield part does not touch any live parts.

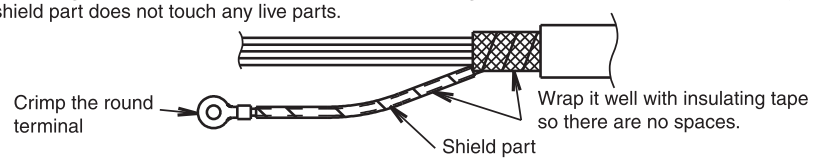

⚠ CAUTION	Be sure that the shield part of the shielded cable does not touch the terminal block or any live parts. Failure to do so may lead to electric shock or fire.

WHEN CONNECTION TO THE FORCED STOP INPUT

With the Forced Stop input, it is possible to override the air conditioning operation to force a stop if a signal is received from a fire alarm device, etc.

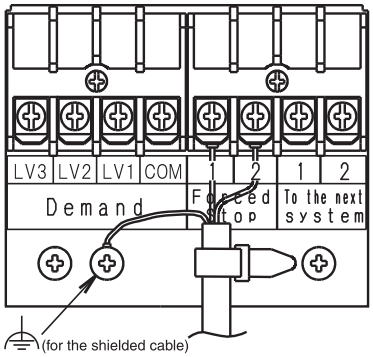

Connect the wiring (2-wire) to points 1 and 2 on the left side of the terminal block.
The shield part of the shielded cable is connected with functional earthing under the terminal block.
Secure the wiring with the cord clamp located on the lower part of the terminal block.

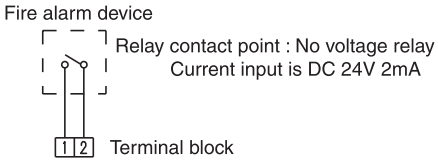

WHEN CONNECTING THE DEMAND CONTROLLER INPUT

It is possible to choose various demand levels.
Refer to the table below.

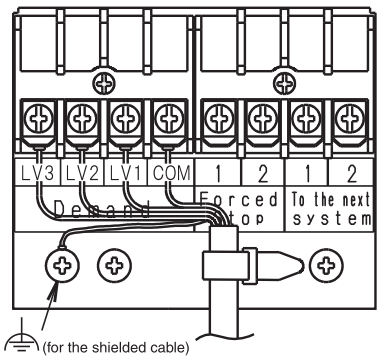

Terminal no. for demand section	Description
LV1	Approx. 75% of rated power input
LV2	Approx. 50% of rated power input
LV3	Compressor off

Connect the wiring (4-wire) to the Demand section (LV1, LV2, LV3, COM) on the terminal block.
The shield part of the shielded cable is connected with functional earthing under the terminal block.
Secure the wiring with the cord clamp located on the lower part of the terminal block.

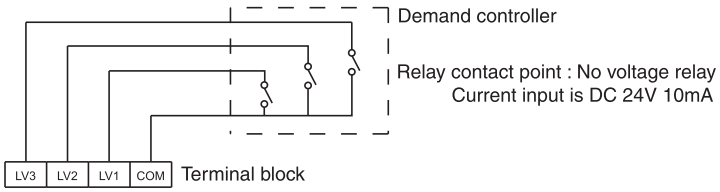

WHEN CONNECTING TO THE NEXT SYSTEM UNIT

- Forced Stop input can be transferred to the next system unit.
- When using the Forced Stop input, connect the wiring to the terminal points 1 and 2 on the right side of the lower part of the terminal block.
- The maximum wire/cable length is 100 m.
- The demand control cannot be transferred to the next system unit.
- When transferring to the next system, the maximum number of connecting units is 30.

1. Connecting the wiring to the lower part of the terminal block.
   When transferring the Forced Stop input to the next system connect the wiring (2-wire) to the terminal points 1 and 2 at the lower right side of the terminal block.
   The shield part of the shielded cable is connected with functional earthing under the terminal block.
   Secure the wiring with the cord clamp located on the lower part of the terminal block.

2. Connecting the shielded cable to the terminal block for the next system.
   For the Forced Stop input, connect the wiring to the terminal points 1 and 2 at the lower right side of the terminal block.
   When connecting to the next system be sure to connect to the appropriate terminal point due to the polarity.

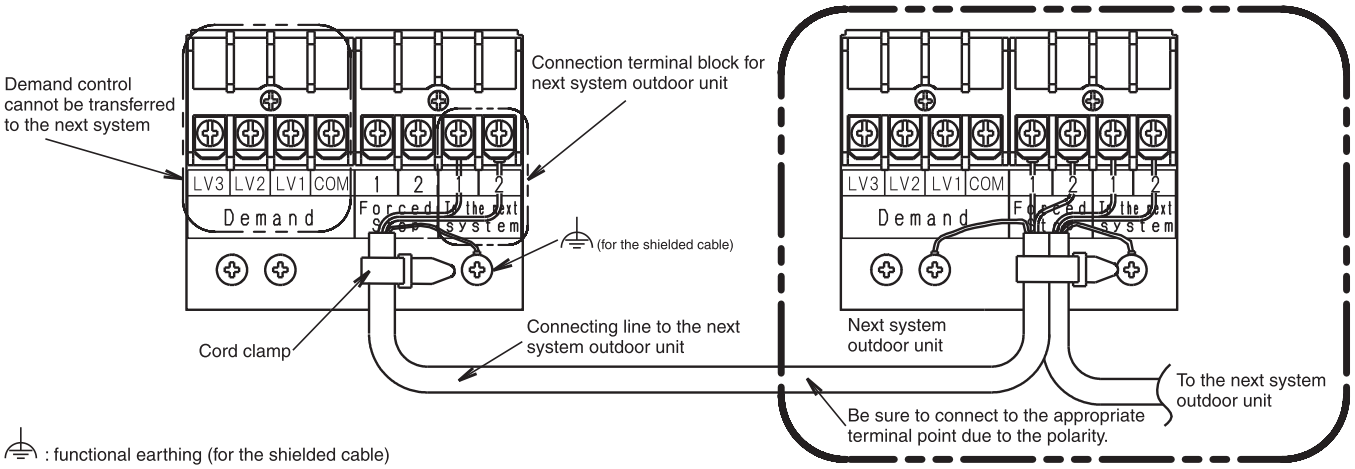

PRINTED IN MALAYSIA ACXF60-30051 ①

2. WIRING PROCEDURE

Follow the wiring procedure below for the terminal connection.

1. Secure and clamp the power and signal lines with the tie, set up close to the valve.
2. Set the wiring and cables for the power and signal lines to the outdoor unit together, and secure each wire and cable with the tie.
3. Set up the wiring and cable for the outdoor unit piping and secure with a tie.

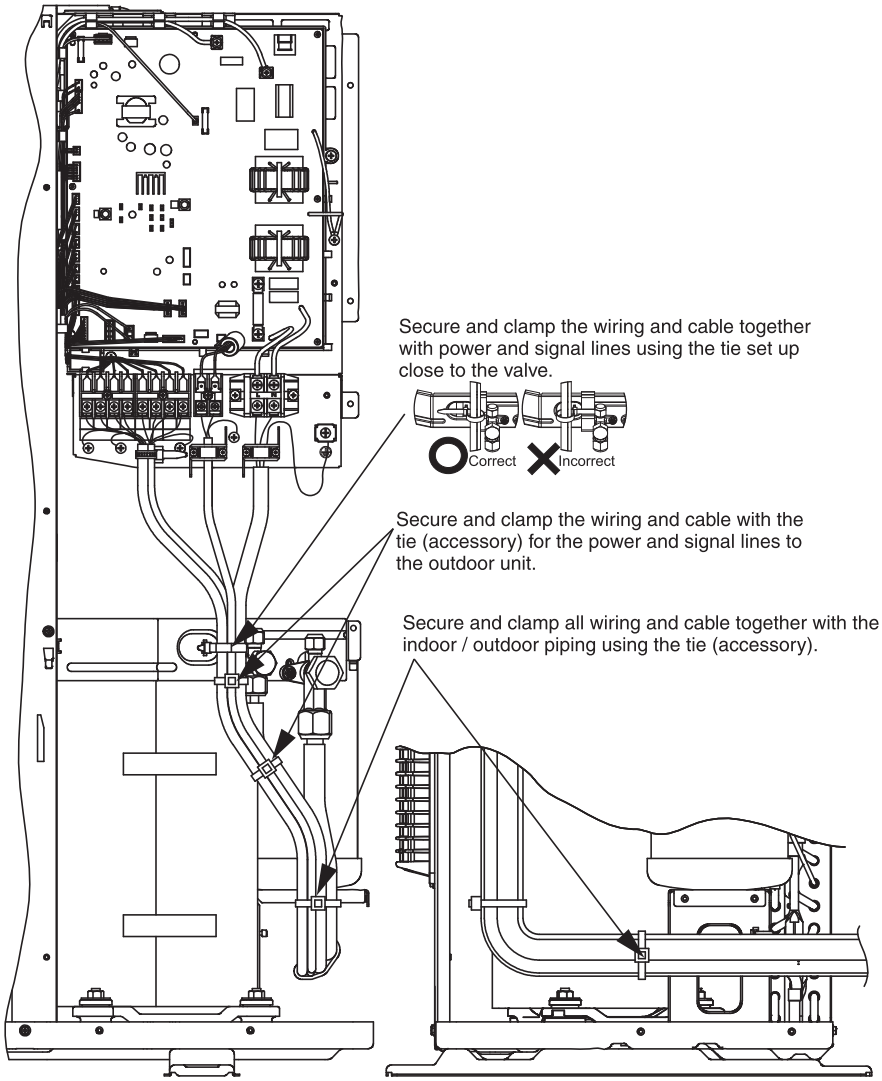

Electrical Wiring

■ General Precautions on Wiring

(1) Before wiring, confirm the rated voltage of the unit as shown on its nameplate, then carry out the wiring closely following the wiring diagram.

(2) Provide a power outlet to be used exclusively for each unit and a circuit breaker for overcurrent protection should be provided in the exclusive line.

(3) To prevent possible hazards from insulation failure, the unit must be grounded.

(4) Each wiring connection must be done in accordance with the wiring system diagram. Wrong wiring may cause the unit to misoperate or become damaged.

(5) Do not allow wiring to touch the refrigerant tubing, compressor, or any moving parts of the fan.

(6) Unauthorized changes in the internal wiring can be very dangerous. The manufacturer will accept no responsibility for any damage or misoperation that occurs as a result of such unauthorized changes.

(7) Regulations on wire diameters differ from locality to locality. For field wiring rules, please refer to your LOCAL ELECTRICAL CODES before beginning.
You must ensure that installation complies with all relevant rules and regulations.

(8) To prevent malfunction of the air conditioner caused by electrical noise, care must be taken when wiring as follows:

- The remote control wiring and the inter-unit control wiring should be wired apart from the inter-unit power wiring.
- Use shielded wires for inter-unit control wiring between units and ground the shield on both sides.

(9) If the power supply cord of this appliance is damaged, it must be replaced by a repair shop designated by the manufacturer, because special-purpose tools are required.

CAUTION **Check local electrical codes and regulations before wiring.**
Also, check any specified instruction or limitations.

■ Recommended Wire Length and Wire Diameter for Power Supply System

Indoor unit

Type	(B) Power supply 2.5 mm²	Time delay fuse or circuit capacity
U2	Max. 130 m	10-16 A

Indoor unit

Type	(B) Power supply 2.5 mm²	Time delay fuse or circuit capacity
F1	Max.130 m	10-16A
T2	Max.130 m	10-16A

Type	(B) Power supply 2 mm²	Time delay fuse or circuit capacity
K2	Max.130 m	10-16A

Control wiring

(C) Inter-unit (between outdoor and indoor units) control wiring	(D) Remote control wiring	(E) Control wiring for group control
0.75 mm² (AWG #18) **Use shielded wiring***	0.75 mm² (AWG #18)	0.75 mm² (AWG #18)
Max. 1,000 m	Max. 500 m	Max. 200 m (Total)

NOTE

* With ring-type wire terminal.

■ Wiring System Diagrams

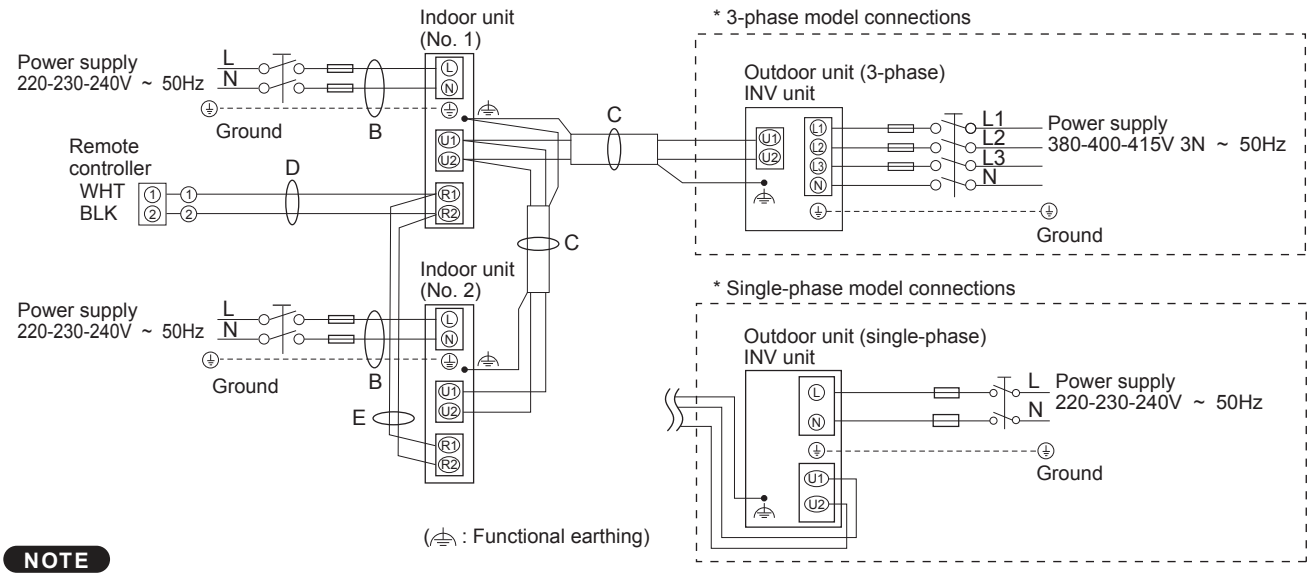

NOTE

(1) Refer to “Recommended Wire Length and Wire Diameter for Power Supply System” for the explanation of “B”, “C”, “D” and “E” in the above diagram.

(2) The basic connection diagram of the indoor unit shows the terminal boards, so the terminal boards in your equipment may differ from the diagram.

(3) Refrigerant Circuit (R.C.) address should be set before turning the power on.

(4) Regarding R.C. address setting, refer to the installation instructions supplied with the remote controller (optional). Auto address setting can be executed by remote controller automatically. Refer to the installation instructions supplied with the remote controller (optional).

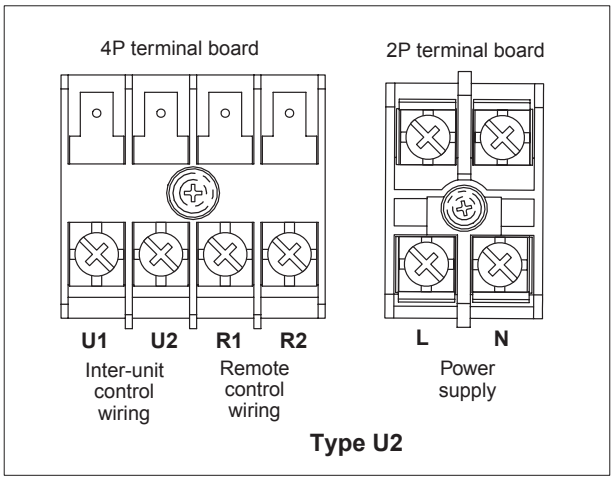

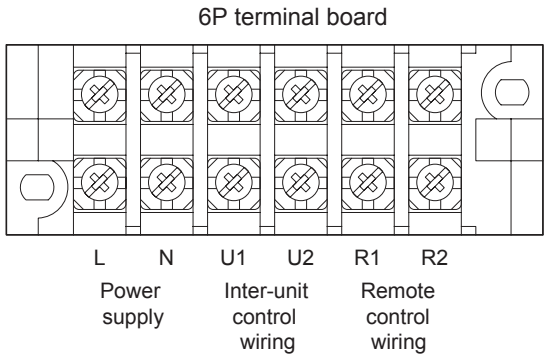

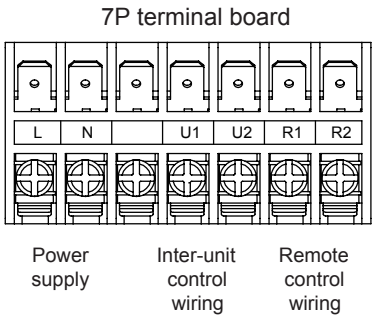

CAUTION

(1) When linking the outdoor units in a network, disconnect the terminal extended from the short plug from all outdoor units except any one of the outdoor units.
(When shipping: In shorted condition.)
For a system without link (no wiring connection between outdoor units), do not remove the short plug.

(2) Do not install the inter-unit control wiring in a way that forms a loop.

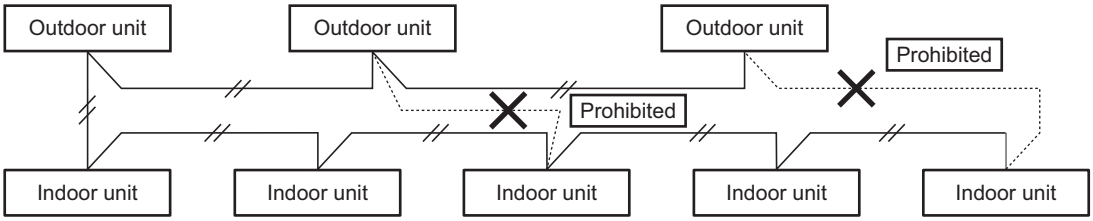

(3) Do not install inter-unit control wiring such as star branch wiring. Star branch wiring causes mis-address setting.

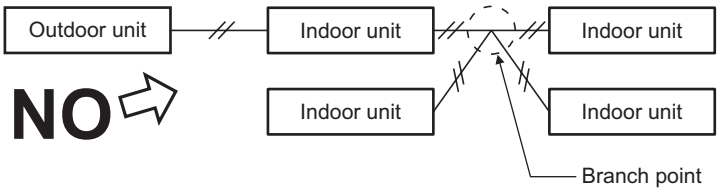

(4) If branching the inter-unit control wiring, the number of branch points should be 16 or fewer.

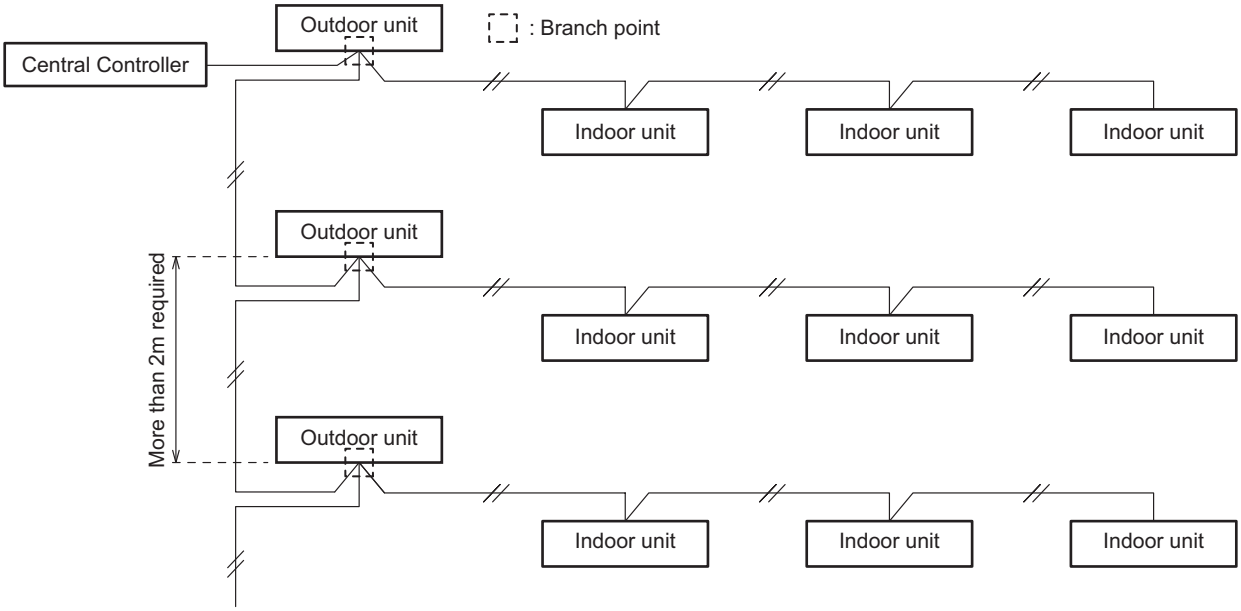

(5) Use shielded wires for inter-unit control wiring (c) and ground the shield on both sides, otherwise misoperation from noise may occur.
Connect wiring as shown in Section "■ Wiring System Diagrams".

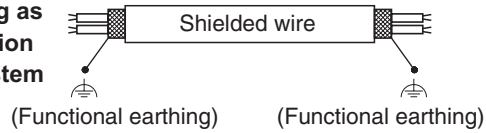

(6)
- **Connecting cable between indoor unit and outdoor unit shall be approved polychloroprene sheathed 5 or 3 *1.5 mm² flexible cord. Type designation 60245 IEC 57 (H05RN-F, GP85PCP etc.) or heavier cord.**
- **Use the standard power supply cables for Europe (such as H05RN-F or H07RN-F which conform to CENELEC (HAR) rating specifications) or use the cables based on IEC standard. (60245 IEC57, 60245 IEC66)**

WARNING

Loose wiring may cause the terminal to overheat or result in unit malfunction. A fire hazard may also occur. Therefore, ensure that all wiring is tightly connected.

When connecting each power wire to the terminal, follow the instructions on "How to connect wiring to the terminal" and fasten the wire securely with the terminal screw.

How to connect wiring to the terminal

■ For stranded wiring

(1) Cut the wire end with cutting pliers, then strip the insulation to expose the stranded wiring about 10 mm and tightly twist the wire ends.

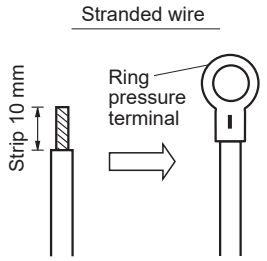

(2) Using a Phillips head screwdriver, remove the terminal screw(s) on the terminal board.

(3) Using a ring connector fastener or pliers, securely clamp each stripped wire end with a ring pressure terminal.

(4) Place the ring pressure terminal, and replace and tighten the removed terminal screw using a screwdriver.

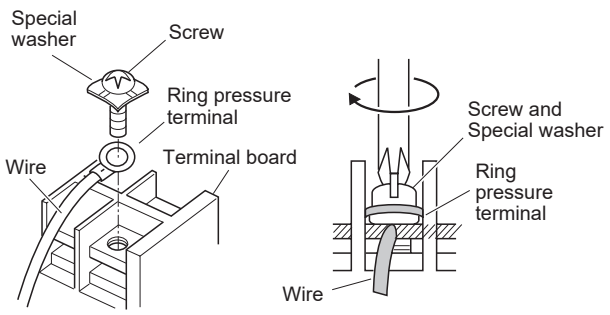

■ Examples of shield wires

(1) Remove cable coat not to scratch braided shield.

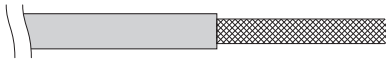

(2) Unbraid the braided shield carefully and twist the unbraided shield wires tightly together. Insulate the shield wires by covering them with an insulation tube or wrapping insulating tape around them.

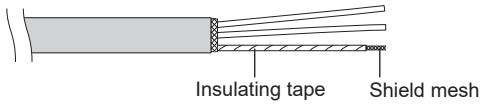

(3) Remove coat of signal wire.

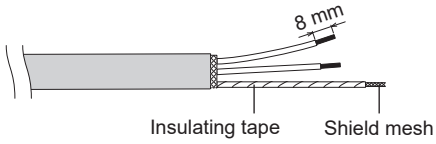

(4) Attach ring pressure terminals to the signal wires and the shield wires insulated in Step (2).

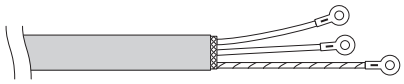

■ Wiring samples

Type U2

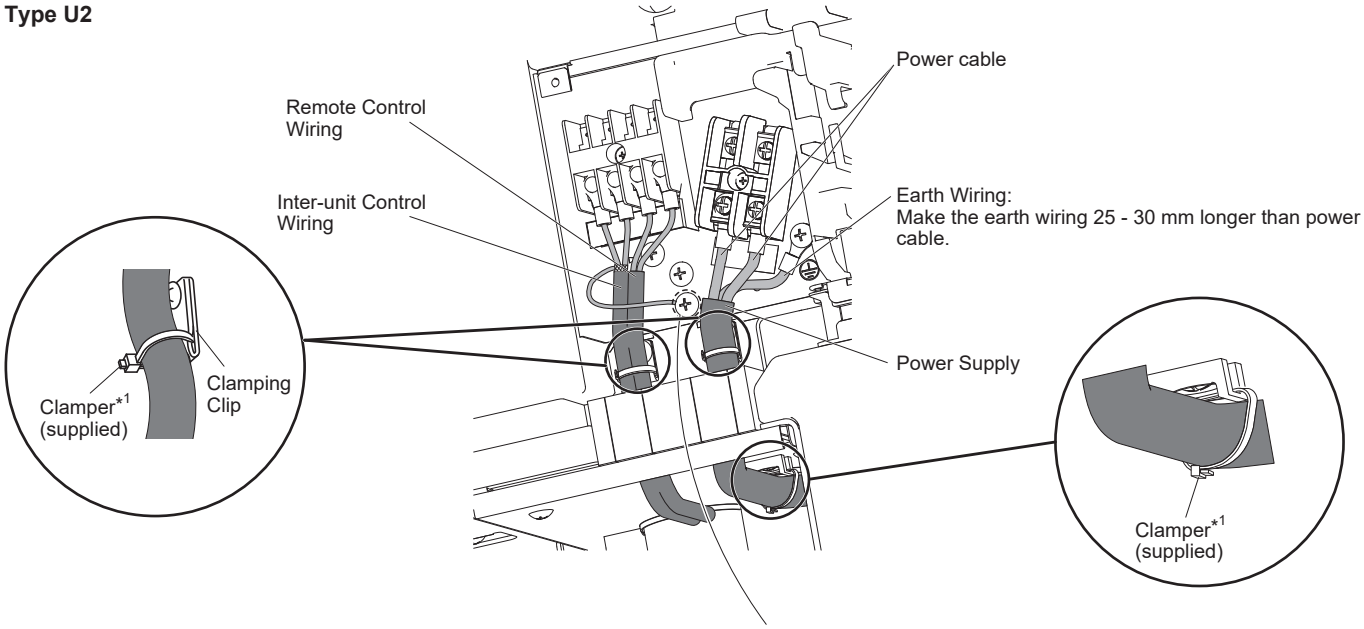

*1 Fasten tightly.

Type T2

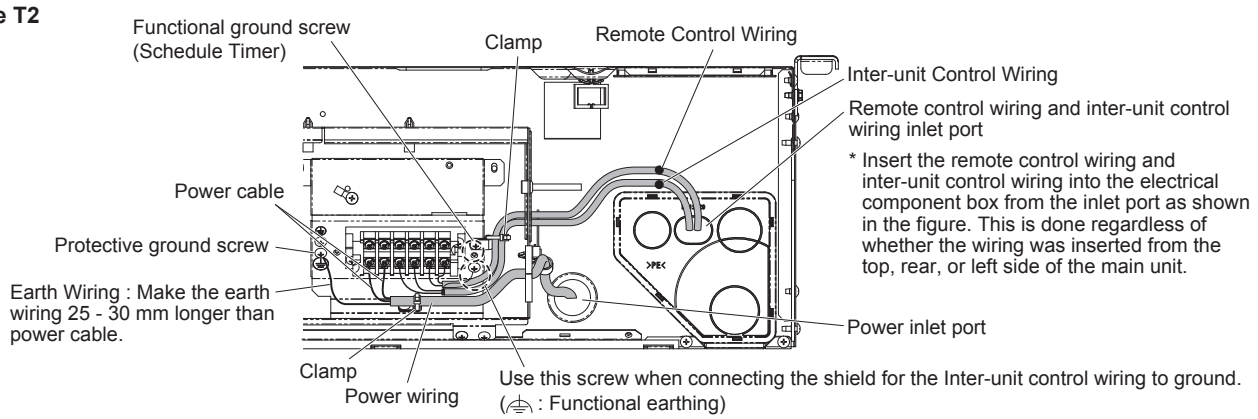

How to carry out power supply wiring

(1) Wiring connection ports

The power inlet port is located at the rear.
The remote control wiring inlet port is located at the rear (for use with the wired remote controller). For details, see the figure under the section 3-1 (3).

(2) How to carry out wiring

- Insert the power wiring into the indoor unit through the rubber at the side of the electrical component box.
- For wiring connection to the outdoor unit and remote control wiring, open the elongated hole of the piping cover and pass the wires through the hole.

NOTE

Be sure to use sealing putty to seal off the opening to prevent dust.

Type F1

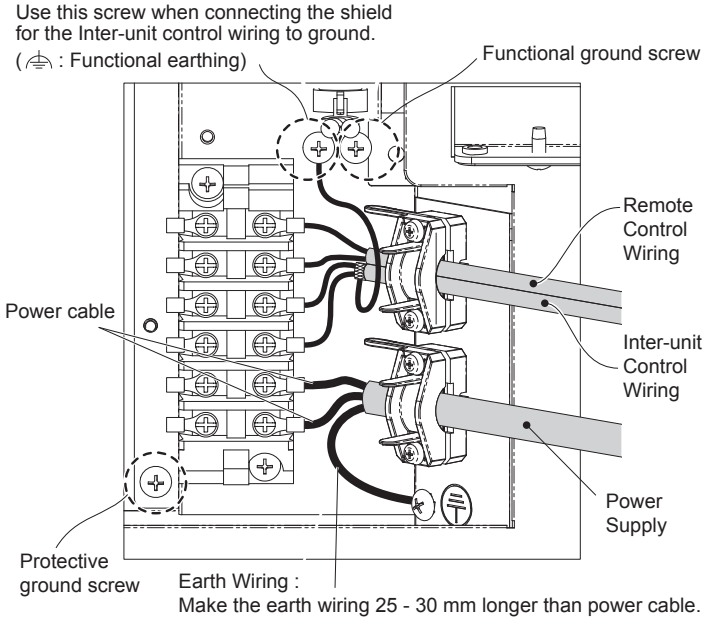

Type K2

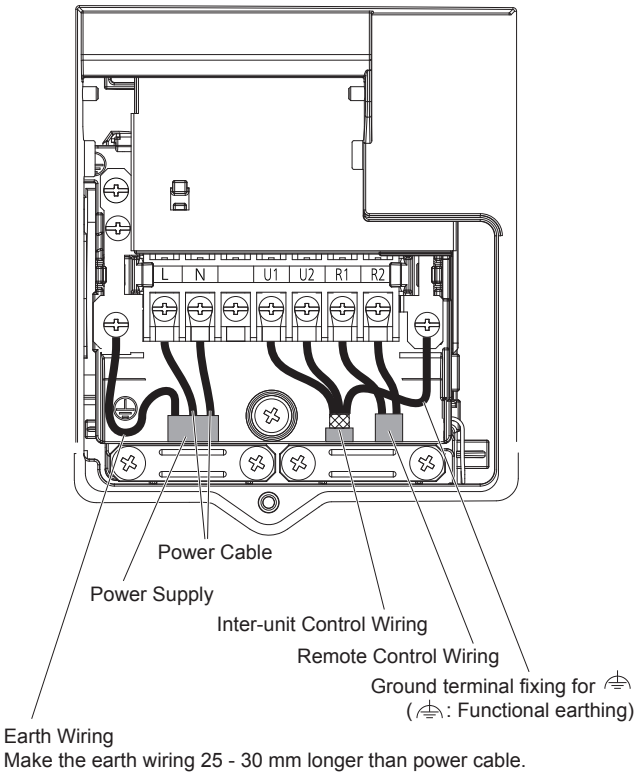

If the terminal screws on the terminal board are tightened too hard, the screws might be damaged. See the tightening torque values as shown below.

Tightening torques for terminal screws	1.0 – 1.4 N · m {10 – 14 kgf · cm}

1-11. Installation Instructions

Outdoor Unit

1. U-100PZ2E5, U-125PZ2E5, U-140PZ2E5,
U-100PZ2E8, U-125PZ2E8, U-140PZ2E8

PRECAUTION FOR USING R32 REFRIGERANT

- The basic installation work procedures are the same as conventional refrigerant (R410A, R22) models.
  However, pay careful attention to the following points:

⚠ WARNING	
❗	Since the working pressure is higher than that of refrigerant R22 models, some of the piping and installation and service tools are special. Especially, when replacing a refrigerant R22 model with a new refrigerant R32 model, always replace the conventional piping and flare nuts with the R32 and R410A piping and flare nuts on the outdoor unit side. For R32 and R410A, the same flare nut on the outdoor unit side and pipe can be used.
❗	Models that use refrigerant R32 and R410A have a different charging port thread diameter to prevent erroneous charging with refrigerant R22 and for safety. Therefore, check beforehand.
❗	Be more careful than R22 so that foreign matter (oil, water, etc.) does not enter the piping. Also, when storing the piping, securely seal the opening by pinching, taping, etc. (Handling of R32 is similar to R410A.)
⚠ CAUTION	
❗	1. Installation (Space) • That the installation of pipe-work shall be kept to a minimum. • Must ensure that pipe-work shall be protected from physical damage. • That compliance with national gas regulations shall be observed. • Must ensure mechanical connections be accessible for maintenance purposes. • In cases that require mechanical ventilation, ventilation openings shall be kept clear of obstruction. • When disposal of the product, do follow to the precautions in “12. Recovery” on page 1-11-1-6 and comply with national regulations.Always contact to local municipal offices for proper handling.
❗	2. Servicing 2-1. Service personnel • Any qualified person who is involved with working on or breaking into a refrigerant circuit should hold a current valid certificate from an industry-accredited assessment authority, which authorizes their competence to handle refrigerants safely in accordance with an industry recognised assessment specification.

- Servicing shall only be performed as recommended by the equipment manufacturer. Maintenance and repair requiring the assistance of other skilled personnel shall be carried out under the supervision of the person competent in the use of flammable refrigerants.
- Servicing shall be performed only as recommended by the manufacturer.

2-2. Work

- Prior to beginning work on systems containing flammable refrigerants, safety checks are necessary to ensure that the risk of ignition is minimised.
  For repair to the refrigerating system, "2-3. General work area" on page 1-11-1-2 to "2-7.Ventilated area" on page 1-11-1-2 shall be completed prior to conducting work on the system.
- Work shall be undertaken under a controlled procedure so as to minimise the risk of a flammable gas or vapour being present while the work is being performed.

2-3. General work area

- All maintenance staff and others working in the local area shall be instructed on the nature of work being carried out.
- Work in confined spaces shall be avoided.
- The area around the workspace shall be sectioned off.
- Ensure that the conditions within the area have been made safe by control of flammable material.

2-4. Checking for presence of refrigerant

- The area shall be checked with an appropriate refrigerant detector prior to and during work, to ensure the technician is aware of potentially toxic or flammable atmospheres.
- Ensure that the leak detection equipment being used is suitable for use with all applicable refrigerants, i.e. non-sparking, adequately sealed or intrinsically safe.

2-5. Presence of fire extinguisher

- If any hot work is to be conducted on the refrigeration equipment or any associated parts, appropriate fire extinguishing equipment shall be available to hand.
- Have a dry powder or CO_2 fire extinguisher adjacent to the charging area.

2-6. No ignition sources

- No person carrying out work in relation to a refrigeration system which involves exposing any pipe work shall use any sources of ignition in such a manner that it may lead to the risk of fire or explosion.
- All possible ignition sources, including cigarette smoking, should be kept sufficiently far away from the site of installation, repairing, removing and disposal, during which refrigerant can possibly be released to the surrounding space.
- Prior to work taking place, the area around the equipment is to be surveyed to make sure that there are no flammable hazards or ignition risks.
- "No Smoking" signs shall be displayed.

2-7.Ventilated area

- Ensure that the area is in the open or that it is adequately ventilated before breaking into the system or conducting any hot work.
- A degree of ventilation shall continue during the period that the work is carried out.
- The ventilation should safely disperse any released refrigerant and preferably expel it externally into the atmosphere.

2-8. Checks to the refrigeration equipment

- Where electrical components are being changed, they shall be fit for the purpose and to the correct specification.
- At all times the manufacturer's maintenance and service guidelines shall be followed.
- If in doubt, consult the manufacturer's technical department for assistance.
  - The charge size is in accordance with the room size within which the refrigerant containing parts are installed;
  - The ventilation machinery and outlets are operating adequately and are not obstructed;
  - Marking to the equipment continues to be visible and legible. Markings and signs that are illegible shall be corrected;
  - Refrigeration pipe or components are installed in a position where they are unlikely to be exposed to any substance which may corrode refrigerant containing components, unless the components are constructed of materials which are inherently resistant to being corroded or are suitably protected against being so corroded.

2-9. Checks to electrical devices

- Repair and maintenance to electrical components shall include initial safety checks and component inspection procedures.
- If a fault exists that could compromise safety, then no electrical supply shall be connected to the circuit until it is satisfactorily dealt with.
- If the fault cannot be corrected immediately but it is necessary to continue operation, an adequate temporary solution shall be used.
- This shall be reported to the owner of the equipment so all parties are advised.
- Initial safety checks shall include:
  - That no live electrical components and wiring are exposed while charging, recovering or purging the system;
  - That there is continuity of earth bonding.

3. Repairs to sealed components

- During repairs to sealed components, all electrical supplies shall be disconnected from the equipment being worked upon prior to any removal of sealed covers, etc.
- Particular attention shall be paid to the following to ensure that by working on electrical components, the casing is not altered in such a way that the level of protection is affected. This shall include damage to cables, excessive number of connections, terminals not made to original specification, damage to seals, incorrect fitting of glands, etc.
- Ensure that apparatus is mounted securely.
- Ensure that seals or sealing materials have not degraded to the point that they no longer serve the purpose of preventing the ingress of flammable atmospheres.
- Replacement parts shall be in accordance with the manufacturer's specifications.

NOTE: The use of silicon sealant can inhibit the effectiveness of some types of leak detection equipment.
Intrinsically safe components do not have to be isolated prior to working on them.

4. Repair to intrinsically safe components

- Do not apply any permanent inductive or capacitance loads to the circuit without ensuring that this will not exceed the permissible voltage and current permitted for the equipment in use.
- Intrinsically safe components are the only types that can be worked on while live in the presence of a flammable atmosphere. The test apparatus shall be at the correct rating.
- Replace components only with parts specified by the manufacturer.
- Other parts may result in the ignition of refrigerant in the atmosphere from a leak.

5. Cabling

- Check that cabling will not be subject to wear, corrosion, excessive pressure, vibration, sharp edges or any other adverse environmental effects.
- The check shall also take into account the effects of aging or continual vibration from sources such as compressors or fans.

6. Detection of flammable refrigerants
- Under no circumstances shall potential sources of ignition be used in the searching for or detection of refrigerant leaks.
- A halide torch (or any other detector using a naked flame) shall not be used.

7. Leak detection methods
- Electronic leak detectors may be used to detect refrigerant leaks but, in the case of flammable refrigerants, the sensitivity may not be adequate, or may need re-calibration. (Detection equipment shall be calibrated in a refrigerant-free area.)
- Ensure that the detector is not a potential source of ignition and is suitable for the refrigerant used.
- Leak detection equipment shall be set at a percentage of the LFL of the refrigerant and shall be calibrated to the refrigerant employed, and the appropriate percentage of gas (25 % maximum) is confirmed.
- Leak detection fluids are suitable for use with most refrigerants but the use of detergents containing chlorine shall be avoided as the chlorine may react with the refrigerant and corrode the copper pipe-work.
- If a leak is suspected, all naked flames shall be removed/extinguished.
- If a leakage of refrigerant is found which requires brazing, all of the refrigerant shall be recovered from the system, or isolated (by means of shut off valves) in a part of the system remote from the leak.
  For appliances containing flammable refrigerants, oxygen free nitrogen (OFN) shall then be purged through the system both before and during the brazing process.

8. Removal and evacuation
- When breaking into the refrigerant circuit to make repairs-or for any other purpose-conventional procedures shall be used.
  However, it is important that best practice is followed since flammability is a consideration.The following procedure shall be adhered to:
  - remove refrigerant;
  - purge the circuit with inert gas;
  - evacuate;
  - purge again with inert gas;
  - open the circuit by cutting or brazing.
- The refrigerant charge shall be recovered into the correct recovery cylinders.
- The system shall be “flushed” with OFN to render the unit safe. This process may need to be repeated several times.
- Compressed air or oxygen shall not be used for purging refrigerant systems.
- Flushing shall be achieved by breaking the vacuum in the system with OFN and continuing to fill until the working pressure is achieved, then venting to atmosphere, and finally pulling down to a vacuum.
- This process shall be repeated until no refrigerant is within the system.
- When the final OFN charge is used, the system shall be vented down to atmospheric pressure to enable work to take place.
- This operation is absolutely vital if brazing operations on the pipe-work are to take place.
- Ensure that the outlet for the vacuum pump is not close to any ignition sources and that ventilation is available.

9. Charging procedures
- In addition to conventional charging procedures, the following requirements shall be followed.
  - Ensure that contamination of different refrigerants does not occur when using charging equipment.
  - Hoses or lines shall be as short as possible to minimize the amount of refrigerant contained in them.
  - Cylinders shall be kept upright.
  - Ensure that the refrigeration system is earthed prior to charging the system with refrigerant.
  - Label the system when charging is complete (if not already).
  - Extreme care shall be taken not to over fill the refrigeration system.
- Prior to recharging the system it shall be pressure tested with OFN (refer to “7. Leak detection methods” on page 1-11-1-4).
- The system shall be leak tested on completion of charging but prior to commissioning.
- A follow up leak test shall be carried out prior to leaving the site.
- Electrostatic charge may accumulate and create a hazardous condition when charging and discharging the refrigerant.
  To avoid fire or explosion, dissipate static electricity during transfer by grounding and bonding containers and equipment before charging/discharging.

10. Decommissioning
- Before carrying out this procedure, it is essential that the technician is completely familiar with the equipment and all its detail.
- It is recommended good practice that all refrigerants are recovered safely.
- Prior to the task being carried out, an oil and refrigerant sample shall be taken in case analysis is required prior to re-use of reclaimed refrigerant.
- It is essential that electrical power is available before the task is commenced.

a) Become familiar with the equipment and its operation.
b) Isolate system electrically.
c) Before attempting the procedure ensure that:

- mechanical handling equipment is available, if required, for handling refrigerant cylinders;
- all personal protective equipment is available and being used correctly;
- the recovery process is supervised at all times by a competent person;
- recovery equipment and cylinders conform to the appropriate standards.

d) Pump down refrigerant system, if possible.
e) If a vacuum is not possible, make a manifold so that refrigerant can be removed from various parts of the system.
f) Make sure that cylinder is situated on the scales before recovery takes place.
g) Start the recovery machine and operate in accordance with manufacturer’s instructions.
h) Do not overfill cylinders. (No more than 80 % volume liquid charge).
i) Do not exceed the maximum working pressure of the cylinder, even temporarily.
j) When the cylinders have been filled correctly and the process completed, make sure that the cylinders and the equipment are removed from site promptly and all isolation valves on the equipment are closed off.
k) Recovered refrigerant shall not be charged into another refrigeration system unless it has been cleaned and checked.

- Electrostatic charge may accumulate and create a hazardous condition when charging or discharging the refrigerant. To avoid fire or explosion, dissipate static electricity during transfer by grounding and bonding containers and equipment before charging/discharging.

❗	11. Labelling • Equipment shall be labelled stating that it has been de- commissioned and emptied of refrigerant. • The label shall be dated and signed. • Ensure that there are labels on the equipment stating the equipment contains flammable refrigerant.
❗	12. Recovery • When removing refrigerant from a system, either for servicing or decommissioning, it is recommended good practice that all refrigerants are removed safely. • When transferring refrigerant into cylinders, ensure that only appropriate refrigerant recovery cylinders are employed. • Ensure that the correct number of cylinders for holding the total system charge are available. • All cylinders to be used are designated for the recovered refrigerant and labelled for that refrigerant (i.e. special cylinders for the recovery of refrigerant). • Cylinders shall be complete with pressure-relief valve and associated shut-off valves in good working order. • Empty recovery cylinders are evacuated and, if possible, cooled before recovery occurs. • The recovery equipment shall be in good working order with a set of instructions concerning the equipment that is at hand and shall be suitable for the recovery of all appropriate refrigerants including, when applicable, flammable refrigerants. • In addition, a set of calibrated weighing scales shall be available and in good working order. • Hoses shall be complete with leak-free disconnect couplings and in good condition. • Before using the recovery machine, check that it is in satisfactory working order, has been properly maintained and that any associated electrical components are sealed to prevent ignition in the event of a refrigerant release. Consult manufacturer if in doubt. • The recovered refrigerant shall be returned to the refrigerant supplier in the correct recovery cylinder, and the relevant waste transfer note arranged. • Do not mix refrigerants in recovery units and especially not in cylinders. • If compressors or compressor oils are to be removed, ensure that they have been evacuated to an acceptable level to make certain that flammable refrigerant does not remain within the lubricant. • The evacuation process shall be carried out prior to returning the compressor to the suppliers. • Only electric heating to the compressor body shall be employed to accelerate this process. • When oil is drained from a system, it shall be carried out safely.

CHECK OF DENSITY LIMIT

The refrigerant (R32), which is used in the air conditioner, is a flammable refrigerant. So the requirements for installation space of appliance are determined according to the refrigerant charge amount [m_c] used in the appliance.

The minimum indoor floor space compared with the amount of refrigerant is roughly as follows:

[Type U2, T2, F1]

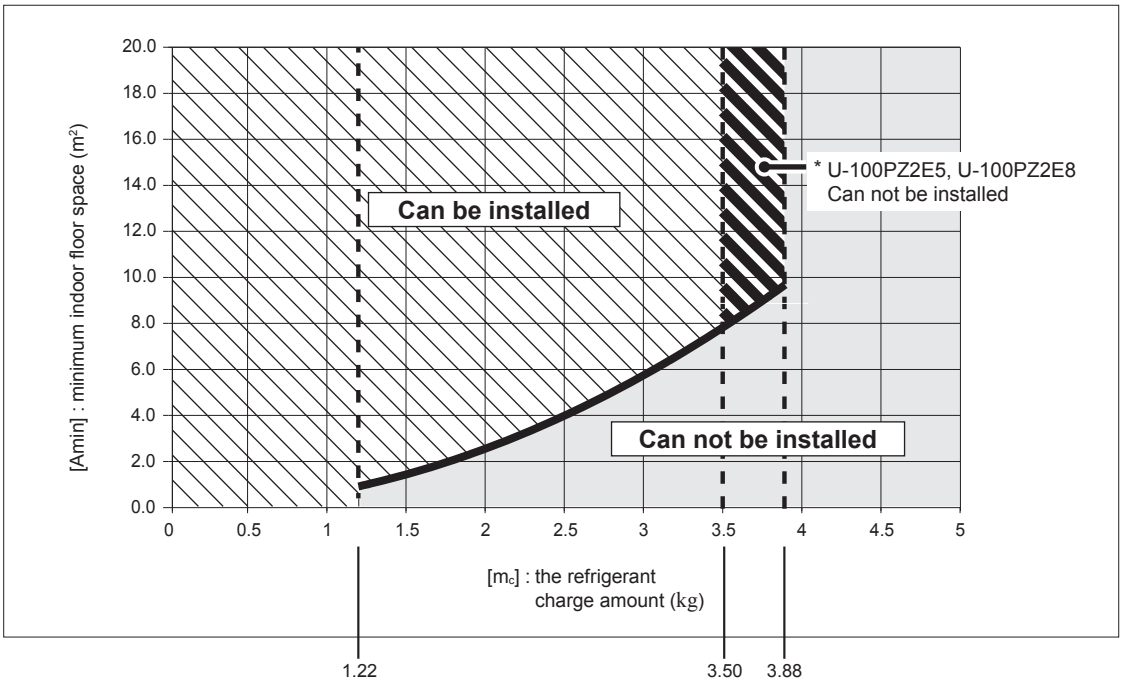

[Type K2]

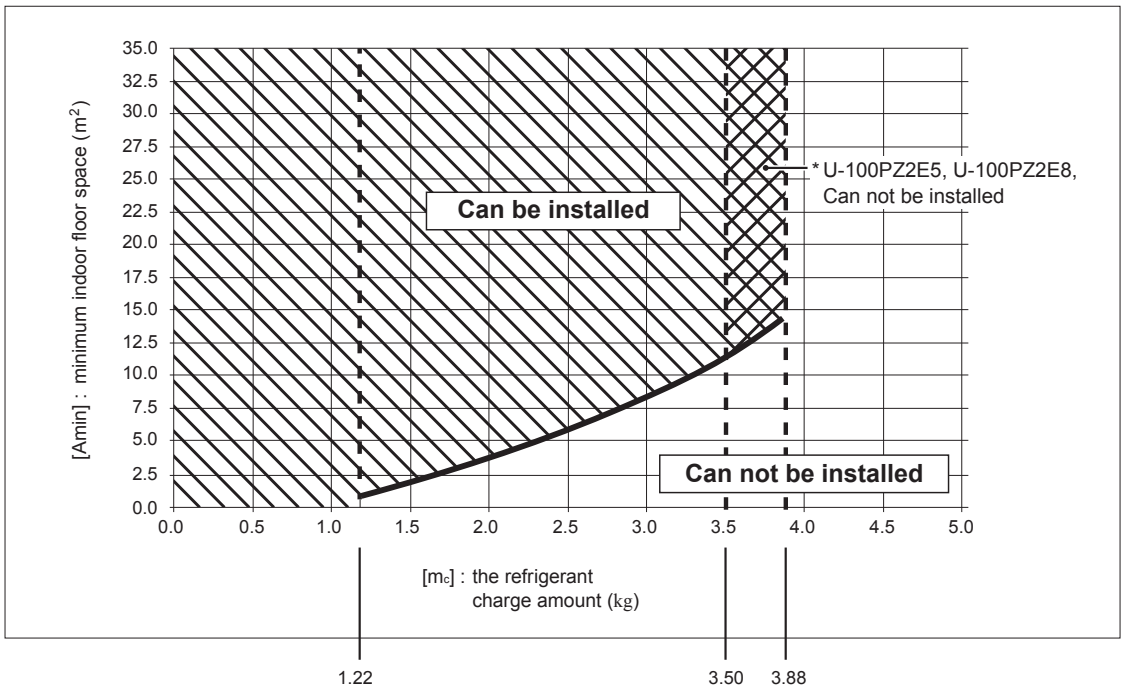

[m_c] : The refrigerant charge amount (Total of refrigerant at shipment and refrigerant charge amount in the field).

[m_{max}] : Maximum refrigerant charge amount

	U-100PZ2E5 U-100PZ2E8	U-125PZ2E5 U-125PZ2E8	U-140PZ2E5 U-140PZ2E8
[m_{max}]	3.50	3.88	3.88

[m_c] ≤ 1.22 : Can be installed
1.22 < [m_c] ≤ [m_{max}] : Installation possible with in the range of slanted line part
[m_c] > [m_{max}] : Can not be installed

1. ACCESSORIES SUPPLIED WITH OUTDOOR UNIT

The following parts are supplied as accessories with each outdoor unit. Check that all accessory parts are present before installing the outdoor unit.

Part name	Q'ty	Diagram	Application
Protective bushing	2		For protecting electrical wires
Banding strap	4		For tying electrical wires together

Part name	Q'ty	Diagram	Application
Installation Instruction	1	SIZE:A3	CONNECTION FOR DEMAND AND FORCED STOP
Installation Instruction	—	———	This manual

! Please install according to Warning and Caution on pages from 1-11-1-1 to 1-11-1-6.

2. SELECT THE OUTDOOR UNIT INSTALLATION LOCATION

⚠ Warning	Be careful when picking up and moving the indoor and outdoor units. Get a partner to help, and bend your knees when lifting to reduce strain on your back. Sharp edges or thin aluminum fins on the air conditioner can cut your fingers.

1. Install the unit once you have checked that the installation location matches the following conditions.
   - A location with sufficient ventilation.
   - Possibly a location that is sheltered from rain or direct sunlight and is well-ventilated so that hot and cool air does not build up.
   - A location where the area around the discharge is not exposed to animals or plants which could adversely affect the release of hot or cool air from the unit.
   - A location where the discharge and operation noise will not be a nuisance to the neighbours.
   - A location that can support the product's weight or vibrations and secured for horizontal installation wherever possible.
   - A location that does not obstruct the air discharge or intake.
   - A location where there is no danger of flammable or corrosive gas leaks.
   - A location that provides space for installation and service.
   - A location that allows the pipe and cable length fixture for internal and external connections.
   - It may need two or more people to carry out the installation work.
2. Refer to the diagram below for the installation location which is exposed to strong wind.
   - If a strong wind of more than 5 m/sec blows to the area directly in front of the discharge, the outdoor unit's air flow is reduced and the outflow may re-enter (short circuit) causing the following outcome:
     "Reduced capacity", "Increased frost formation during heating" or "Operation stopped due to increased pressure".
     Should an exceptionally strong wind blow to the area directly in front of the discharge of the outdoor unit; there is the risk of damage due to the fan's high-speed reverse rotation.
   - If the direction of the prevailing wind is known when operating the unit, place the unit at an appropriate angle to the wind's direction so that the discharge faces towards a building or a wall.

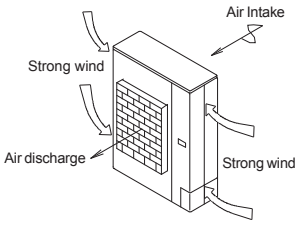

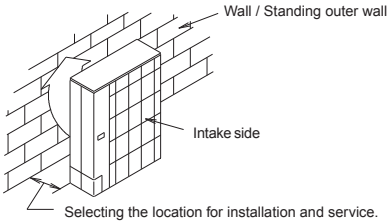

3. If installing at locations prone to snowfall, install the unit as high as possible with suitable roofing which shelters the unit from snow.
4. Avoid installing the unit in locations where there are petroleum products (such as machine oil), saline content (such as coastal areas), sulphurous gas and where high frequency noise is generated.
5. Place the indoor and outdoor unit, power cords and indoor/outdoor unit connection cables at a minimum distance of 1 meter or more away from televisions and radios. This is to avoid interference to picture and/or sound.
   (However, depending on the electromagnetic waves, noise interference may still occur even with the 1 meter separation.)
6. For restaurants and kitchens, avoid installing at locations which draws oil and steam.
   Plastic parts can deteriorate from droplets of oil and steam or it can cause falling parts or water leakage.
7. Avoid installing at the location where cutting oil mist or iron powder is present.
8. If there is an immense voltage fluctuation due to the location's problem, ensure to split the power supply.
9. When installing the product in a place where it will be affected by typhoon or strong wind such as wind blowing between buildings, including the rooftop of a building and a place where there is no building in surroundings, fix the product with an overturn prevention wire, etc.
10. Ensure to assign several people or use a mechanical lift, etc. to transport the unit.

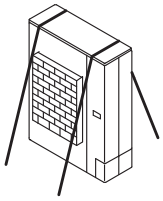

3. SELECTING THE LOCATION FOR INSTALLATION SERVICE

Please secure necessary space to guarantee performance and service & maintenance.
For multiple installations, please secure enough space to enable removal of side face screws between units. (unit:mm)

(A) If there are obstacles at the intake

- If the upper part is open
  1 For separate installation location
    - Only if there are obstacles at the intake

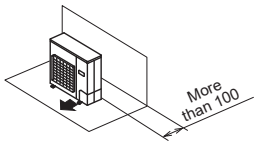

- If there are obstacles on both sides

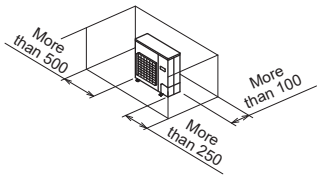

2 For multiple units (more than 2 units)
- If there are obstacles on both sides

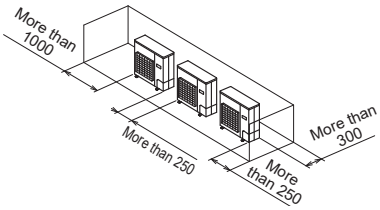

- If there are obstacles above the unit
  1 For separate installation location
    - Only if there are obstacles at the intake

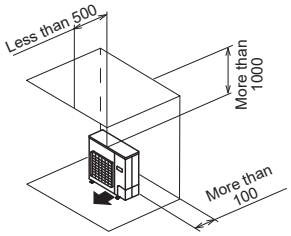

- If there are obstacles on the intake and the other side

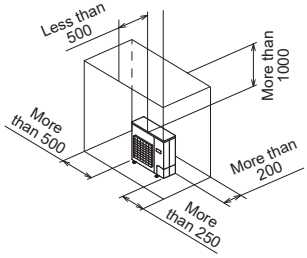

2 For multiple units (more than 2 units)
- If there are obstacles on both sides

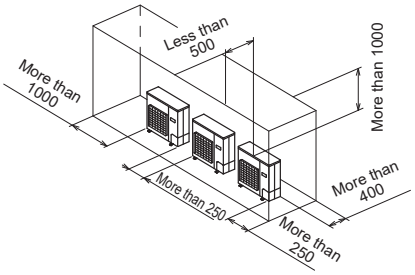

(B) If there are obstacles at the discharge

- If the upper part is open

1 For separate installation location

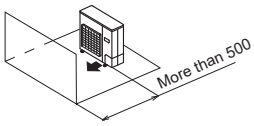

2 For multiple units (more than 2 units)

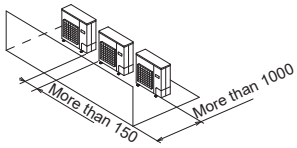

- If there are obstacles above the unit

1 For separate installation location

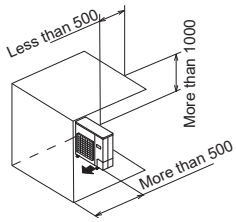

2 For multiple units (more than 2 units)

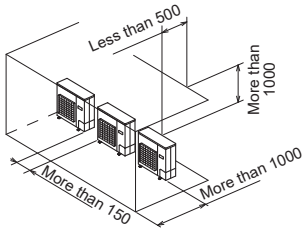

(C) If there are obstacles on both the intake and discharge

Pattern 1 If there is an obstacle that is higher than the unit on the intake side.
(There is no limit to the height of the obstacle above the discharge.)

- If the upper part is open

1 For separate installation location

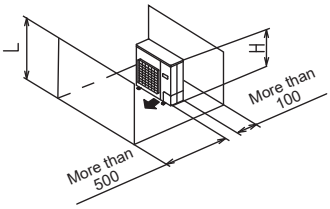

L > H

2 For multiple units (more than 2 units)

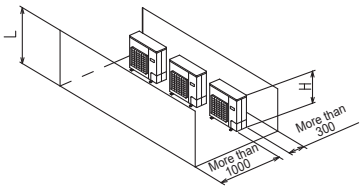

● If there are obstacles above the unit

1 For separate installation location

• The dimensions for H, A and L are shown in the following table.

	L	A
L ≤ H	0 < L ≤ 1/2 H	500
	1/2H < L ≤ H	750
H < L	Install a pedestal or mount so that L ≤ H	

• Cover the bottom part of the pedestal or mount so that air does not go through it.

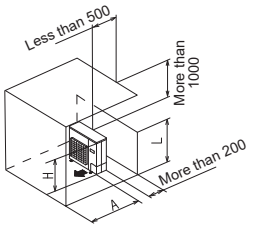

2 For multiple units (up to 2 units)

• The dimensions for H, A and L are shown in the following table.

	L	A
L ≤ H	0 < L ≤ 1/2 H	1000
	1/2H < L ≤ H	1250
H < L	Install a pedestal or mount so that L ≤ H	

• Cover the bottom part of the pedestal or mount so that air does not bypass it.

• A limit of only 2 units can be installed.

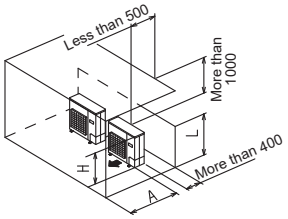

Pattern 2 If there is an obstacle that is higher than the unit on the discharge side. (There is no limit to the height of the obstacle above the discharge.)

● If the upper part is open

1 For separate installation location

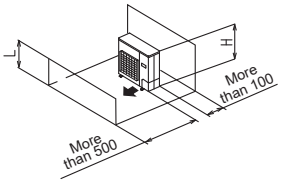

L ≤ H

2 For multiple units (more than 2 units)

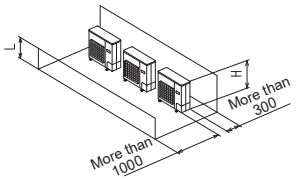

● If there are obstacles above the unit

1 For separate installation location

• The dimensions for H, A and L are shown in the following table.

	A
L ≤ H	100
H < L	Install a pedestal or mount so that L ≤ H

• Cover the bottom part of the pedestal or mount so that air does not go through it.

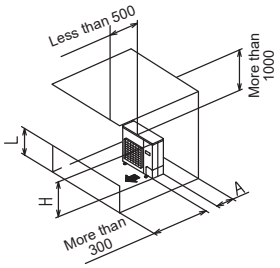

2 For multiple units (up to 2 units)

• The dimensions for H, A and L are shown in the following table.

	A
L ≤ H	400
H < L	Install a pedestal or mount so that L ≤ H

• Cover the bottom part of the pedestal or mount so that air does not bypass it.

• A limit of only 2 units can be installed.

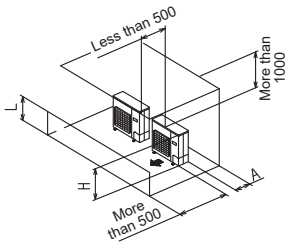

(D) Stacking installation setup

• Stack up to 2 tiers.

• A dimension of approximately 400 mm is required for the second tier outdoor unit's drain pipe and space for maintenance of the first tier outdoor unit.

• Close A section (the space between the upper and lower level outdoor units) so the outtake air does not bypass it.

1 If there are obstacles at the discharge

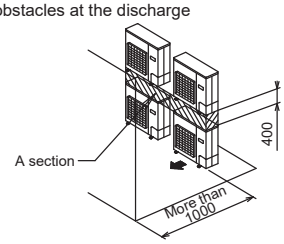

2 If there are obstacles at the intake

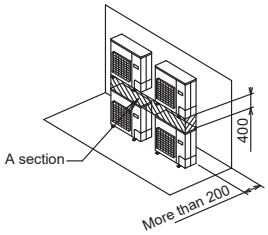

(E) For multiple row installation (on the roof, etc.)

1 For one row installation setup

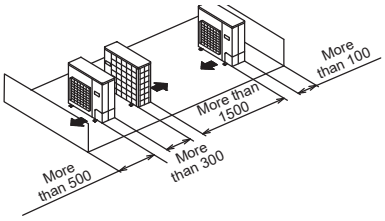

2 For multiple units (more than 2 units)

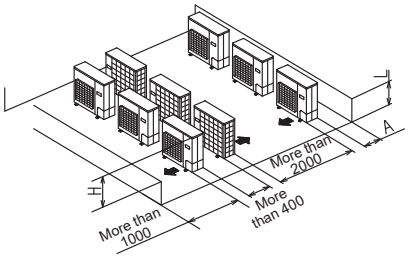

• The dimensions for H, A and L are shown in the following table.

	A
L ≤ H	300
H < L	Installation not possible

• The above mentioned distance is required for optimal unit performance.
Allow as much space as possible in order to obtain the best performance from the units.

4. TRANSPORT AND INSTALL THE OUTDOOR UNIT

- Transporting
  1. Transport the outdoor unit in its original packaging as close as possible to the installation location.
  2. In the event that the unit needs to be lifted or suspended, use a rope or belt and use cloth or wood as padding to avoid damaging the unit.
  3. Use the side handles to carry the unit and be careful not to touch the fan with your hand or any objects.
- Installation
  1. Read the “Select the outdoor unit installation location” thoroughly before installing the outdoor unit.
  2. When installing to a concrete or solid surface, use M10 or a W 3/8 bolts and nuts to secure the unit. Ensure that it installed upright on a horizontal plane. (Use an anchor bolt for the installation as shown in the diagram below.)
  3. Avoid installing on the slanted roof.
  4. In the even where the roof is at risk of receiving oscillations or vibrations, secure the unit with a seismic isolating mount or vibration absorbing rubber.
  5. The drain water will be discharged from the unit during heating or defrosting operation mode.
     Select an appropriate location with good drainage system. (In the winter, there is risk of slipping due to freezing, and depending on the installation set up there is risk of drain water running overhead.)
     ※ Please consult us if installing drain elbows.
     ※ In cold regions (where the outdoor temperature can drop to below 0˚ for 2 to 3 consecutive days), the drain water may freeze and may prevent the fan from operating. For this case, do not use the drain elbow.

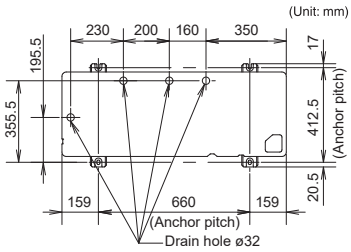

Anchor bolt position

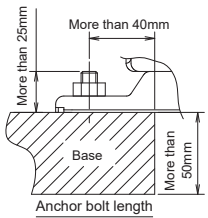

Anchor bolt length

5. REFRIGERANT INSTALLATION

For indoor unit refrigerant piping installation, refer to the installation instruction manual that comes with that indoor unit.
Do not reuse existing piping, install new piping.

1. Precautions during refrigerant installation.
   - Use clean pipes with no dust inside.
     The pipe may corrode with the presence of fluorine dust which will adversely affect the refrigerant piping system due to deterioration of the refrigerant oil, etc.
   - This unit is specifically for R32. Ensure to adhere to the following items and install accordingly:
     - Use pipe cutters and flaring tools which are specially designed for use with R32.
     - When connecting with flaring tools, coat the flare section with ether-based oil.
     - Ensure to use flare nuts supplied with the unit when connecting this unit.
     - Only for storing or for open pipes.
     - Set the lower limit of the allowable pipe length to 5m.
       If the pipe is shorter than 5m, the refrigerant may become overfilled and a problem such as abnormal high pressure could occur.
     - Carefully handle the liquid refrigerant, as it may cause a frostbite.
     - Do not release refrigerants during the piping works for installing, re-installing and repairing refrigeration parts.

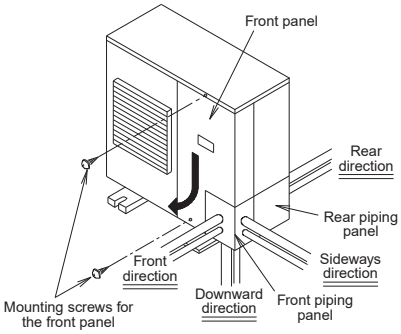

2. The local pipes can protrude from any four directions.
   - Make holes in the pipe panel for the pipes to penetrate it and lay the pipes accordingly.
     - It is recommended to apply additional substance to the cut area for anti-rust protection.
   - Ensure to install pipe panels to prevent rain water from getting into the unit.
   - Close the gap at the pipe connected area with putty or heat insulator (locally supplied).
     - If an insect or small animal enters the outdoor unit, there is the risk of shorting in the product electronic casing.
       [Remove the front panel]
       (1) Remove the 2 mounting screws.
       (2) Slide the front panel using your hands downwards to release the pawls.
       Then remove by pulling the panel towards you.

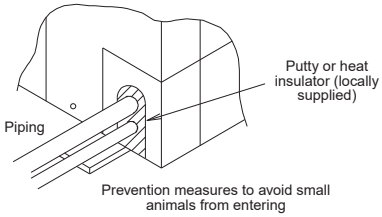

Prevention measures to avoid small animals from entering

Specification for pipe connecting indoor unit to outdoor unit.

		U-100	U-125/140
Maximum pipe length		50m	
Height difference	Outdoor located higher installation	30m	
	Outdoor located lower installation	15m	
Charge-less pipe length		5-30m	
Additional charge per 1 m		45g/m	
Refrigerant charged at shipment		2.60kg	2.98kg
Total refrigerant amount		3.50kg	3.88kg

Precautions when operating the 3-way valve for piping installation

- Do not open the 3-way valve until the piping installation is completed.
  - It is closed during shipment.
  - During installation the side panel may warp if only the flare nut is loosened and tightened with a torque wrench. As a result, always be sure to secure to the hexagonal part of the 3-way valve with a spanner, or other tool.
- Refer to the following table for the tightening torque of the 3-way valve flare nuts.
  - If the nuts are over tightened, they may cause the flares to break or leak.
- Do not add additional force to the valve’s cover.
  - Using spanners on the cover or valve itself (other than the hexagonal parts) may cause gas leakage.
    Avoid using spanners on the cover or parts other than the hexagonal part of the valve.

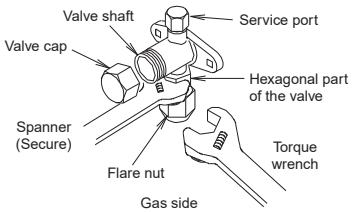

Gas side

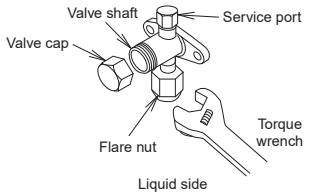

Liquid side

(Please use a single, open-end spanner to loosen and tighten the liquid side 3-way valve flare nut.)

!	Ensure to do the re-flaring of pipes before connecting to units to avoid leaking.

To prevent the ingress of moisture into the joint which could have the potential to freeze and then cause leakage, the joint must be sealed with suitable silicone and insulation material. The joint should be sealed on both liquid and gas side.

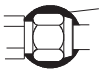

Silicone Sealant must be neutral cure and ammonia free. Use of silicon containing ammonia can lead to stress corrosion on the joint and cause leakage.

[3-way valve operation method]

- Use an Allen wrench (Size 4 mm or 6 mm).
  Direction to open

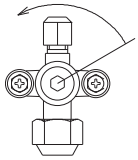

Opening : Open the cover and turn the Allen wrench counter-clockwise until it stops.
Closing : Open the cover and turn the Allen wrench clockwise until it stops.

		Tightening torque (approx.)
Valve cap (Valve size)	ø9.52 (Liquid side)	20.6N•m~28.4N•m (206kgf•cm~284kgf•cm)
	ø15.88 (Gas side)	48.0N•m~59.8N•m (480kgf•cm~598kgf•cm)
Service port		10.7N•m~14.7N•m (107kgf•cm~147kgf•cm)

Precautions for handling the valve cap

- Ensure not to scratch the inner surface of the valve or the end of the valve shaft.
  - Once adjustments to the valve are completed, ensure to tighten the valve cap according to the prescribed torque.

Precautions for handling the service ports

- Use a push-rod with a charge hose.
  - Once adjustments to the valve are completed, ensure to tighten the valve cap according to the prescribed torque.

Precautions for connecting the pipes

- For proper connection, align the union and flare straight with each other.
- Ensure that the pipes do not come into contact with the compressor's bolts or exterior panel.
- There is a risk of condensation from the 3-way valve coming out between the insulation material and the indoor unit's piping when you install the outdoor unit above then the indoor unit. Ensure to caulk the connection parts.

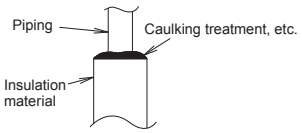

Precautions for insulation installation **Maximum temperature limit of gas or liquid piping exceeds 120 °C**

- In high humidity environment, reinforce the insulation material for the refrigerant piping. Failure to do so may result in condensation on the surface of the insulation material.
- Use materials with good heat-resistant properties as the heat insulator for the pipes. Ensure to insulate both the gas side and liquid side pipes.
  If the pipes are not adequately insulated, condensation and water leakages may occur.
- Ensure that the current insulation covers the pipes up to the unit's connecting part.
  If the piping is exposed, it may cause condensation or burn (when touch the pipe).

Precautions for flare nut installation

- Dimensions when adding flare nuts and the tightening torque

Piping size	Tightening torque (approx.)	Flare section dimensions A	Flare configuration
ø 6.35	14.0 N•m~18.0 N•m (140 kgf•cm~180 kgf•cm)	8.7 ~ 9.1 mm	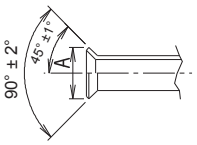
ø 9.52	34.0 N•m~42.0 N•m (340 kgf•cm~420 kgf•cm)	12.8 ~ 13.2 mm	
ø 12.7	49.0 N•m~55.0 N•m (490 kgf•cm~550 kgf•cm)	16.2 ~ 16.6 mm	
ø 15.88	68.0 N•m~82.0 N•m (680 kgf•cm~820 kgf•cm)	19.3 ~ 19.7 mm	

After piping connection has completed, ensure there is no gas leakage.

- When tightening the flare nut, coat the flares (inner surface only) with refrigerant oil on the flares
  Firstly, screw in 3-4 turns by hand.
  ※ Ensure not to get oil on the screw part.
  Refrigerant oil used is ether-based.

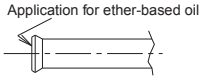

- Once the piping connections are completed, perform leakage inspection using nitrogen gas.
- When flared joints are reused, the flare part shall be re-fabricated.

6. LEAK TEST AND EVACUATION

Use nitrogen gas for the leak tightness test.
Using flammable gas can cause an explosion.

Leak Tightness Test Method

- Keep 3-way valve fully closed and pressurize through three-way valve service port.
- Do not pressurize to the default value at once. Pressurize gradually.
  1 Pressurize to 0.5MPa (5kgf/cm²G) and then leave it for 5 minutes to ensure that the pressure does not drop.
  2 Pressurize to 1.5MPa (15kgf/cm²G) and leave it for 5 minutes to ensure that the pressure does not drop.
  3 For the test, pressurize to 4.15MPa and leave it for about 1 day to ensure that the pressure does not drop.

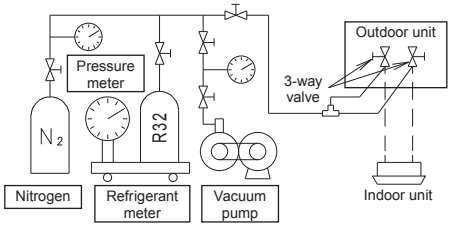

EVACUATION

- Use a vacuum pump (with back-flow prevention device) to vacuum through the 3-way valve service port to achieve the pressure below -101kPa (5 Torr).
- Air and moisture remaining in the refrigerant system due to poor vacuum drying can cause performance decrement and malfunction of the compressor.

7. REGARDING REFRIGERANT FILLING

Precautions during refrigerant filling

- Ensure to fill only with liquid refrigerant when refilling.
  If gas refrigerant is filled, the refrigerant composition will not be balanced and will cause abnormal operation.

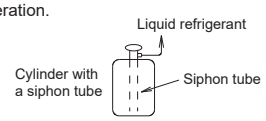

- If using cylinders as shown in the bottom left diagram; without a siphon tube inside, turn it upside down and use it.
  (It is recommended to use the manifold with the side glass.)

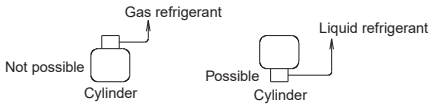

- Use tools that are designed specifically for R32, for pressure resistance and to prevent mixing impurities.
- Fill the refrigerant from the 3-way valve's service port on the liquid-side.

For filling and replacing all refrigerant (For refilling due to a leak)

- For refilling refrigerant, first collect all residual refrigerant and after vacuum dehydration using the vacuum pump. Refill the refrigerant according to the prescribed amount stated on the placard affixed to this unit.

Precautions after the pipes' connection have completed

- Ensure to open the 3-way valve after completing the piping installation, leak test and vacuuming. If it is closed during operation, it can lead to compressor failure.

Charging with refrigerant

- At the time of shipment from the factory, this unit is charged with enough refrigerant for an equivalent pipe length of 30m. If the equivalent pipe length used will be 30m or less, no additional charging will be necessary.
- If the equivalent pipe length will be between 30 and 50m, charge with additional refrigerant according to the equivalent length given in the table below.
  - For standard type

	Additional charging amount	Equivalent length	Minimum length
U-100/125/140P	45 /m	50m	5m

- Pump down operation
  Please refer to "10. PRECAUTIONS REGARDING TEST RUN (Caution for Pump Down)" of this Installation instruction manual. It is also indicated on the label affixed to the outdoor unit.

CONNECTION FOR DEMAND AND FORCED STOP

■ CONNECTION PROCEDURE

Be sure to always turn the power off first when setting up the wire and cable connections.
Failure to do so may lead to electric shock or unit failure.

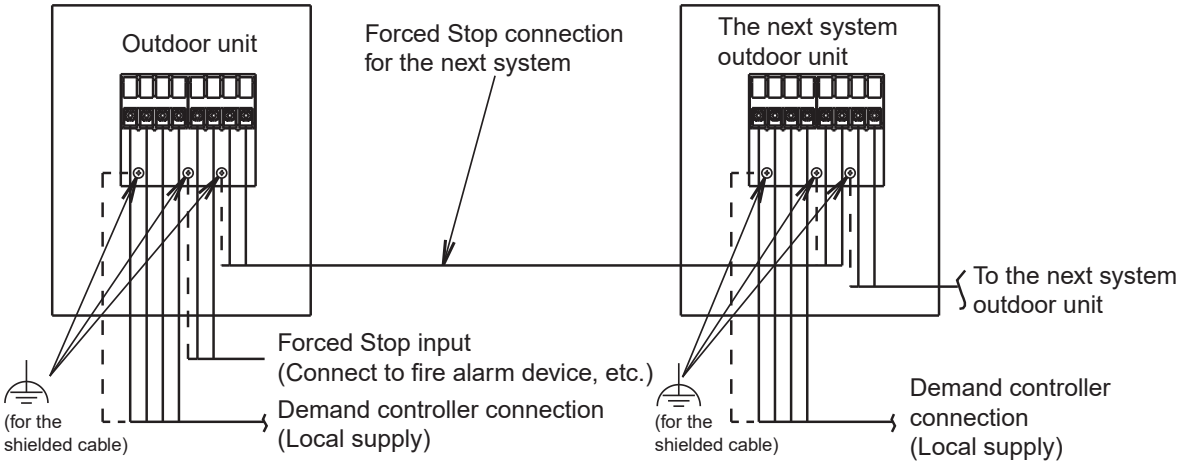

The demand terminal set up is shown in the following illustration.

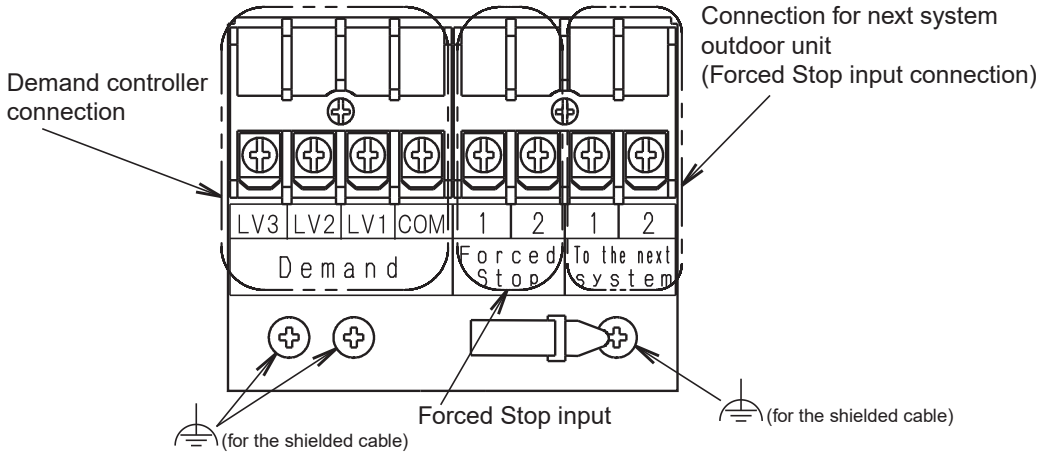

- Use a shielded cable for the cable connection.

For the shield part of the shielded cable twist the end out, crimp it with a round terminal, and connect it to the functional earthing screw.
After crimping it with a round terminal, wrap it with insulating tape so there are no spaces and adjust it so the shield part does not touch any live parts.

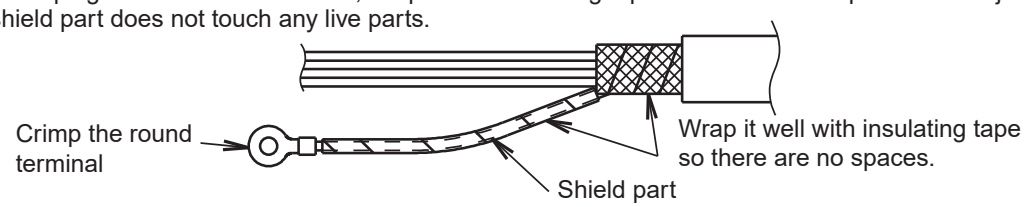

⚠ CAUTION	Be sure that the shield part of the shielded cable does not touch the terminal block or any live parts. Failure to do so may lead to electric shock or fire.

WHEN CONNECTION TO THE FORCED STOP INPUT

With the Forced Stop input, it is possible to override the air conditioning operation to force a stop if a signal is received from a fire alarm device, etc.

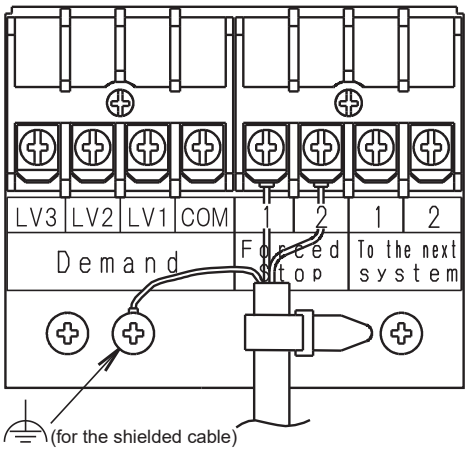

Connect the wiring (2-wire) to points 1 and 2 on the left side of the terminal block.
The shield part of the shielded cable is connected with functional earthing under the terminal block.
Secure the wiring with the cord clamp located on the lower part of the terminal block.

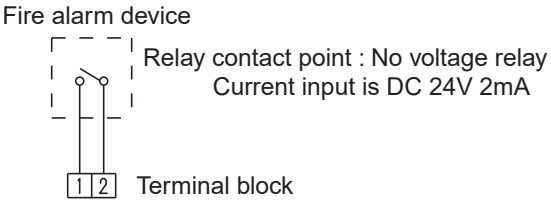

WHEN CONNECTING THE DEMAND CONTROLLER INPUT

It is possible to choose various demand levels.
Refer to the table below.

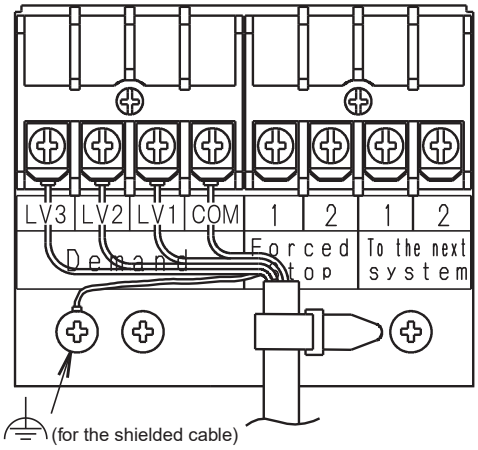

Terminal no. for demand section	Description
LV1	Approx. 75% of rated power input
LV2	Approx. 50% of rated power input
LV3	Compressor off

Connect the wiring (4-wire) to the Demand section (LV1, LV2, LV3, COM) on the terminal block.
The shield part of the shielded cable is connected with functional earthing under the terminal block.
Secure the wiring with the cord clamp located on the lower part of the terminal block.

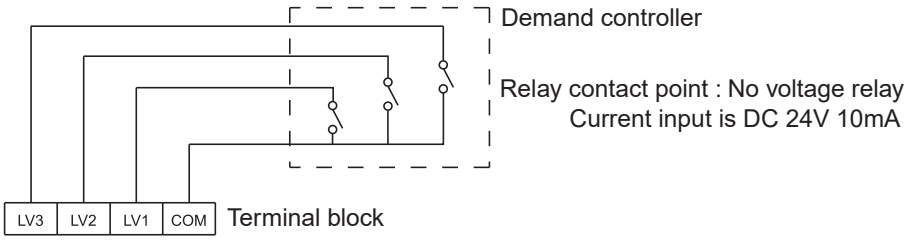

WHEN CONNECTING TO THE NEXT SYSTEM UNIT

- Forced Stop input can be transferred to the next system unit.
- When using the Forced Stop input, connect the wiring to the terminal points 1 and 2 on the right side of the lower part of the terminal block.
- The maximum wire/cable length is 100 m.
- The demand control cannot be transferred to the next system unit.
- When transferring to the next system, the maximum number of connecting units is 30.

1. Connecting the wiring to the lower part of the terminal block.
   When transferring the Forced Stop input to the next system connect the wiring (2-wire) to the terminal points 1 and 2 at the lower right side of the terminal block.
   The shield part of the shielded cable is connected with functional earthing under the terminal block.
   Secure the wiring with the cord clamp located on the lower part of the terminal block.

2. Connecting the shielded cable to the terminal block for the next system.
   For the Forced Stop input, connect the wiring to the terminal points 1 and 2 at the lower right side of the terminal block.
   When connecting to the next system be sure to connect to the appropriate terminal point due to the polarity.

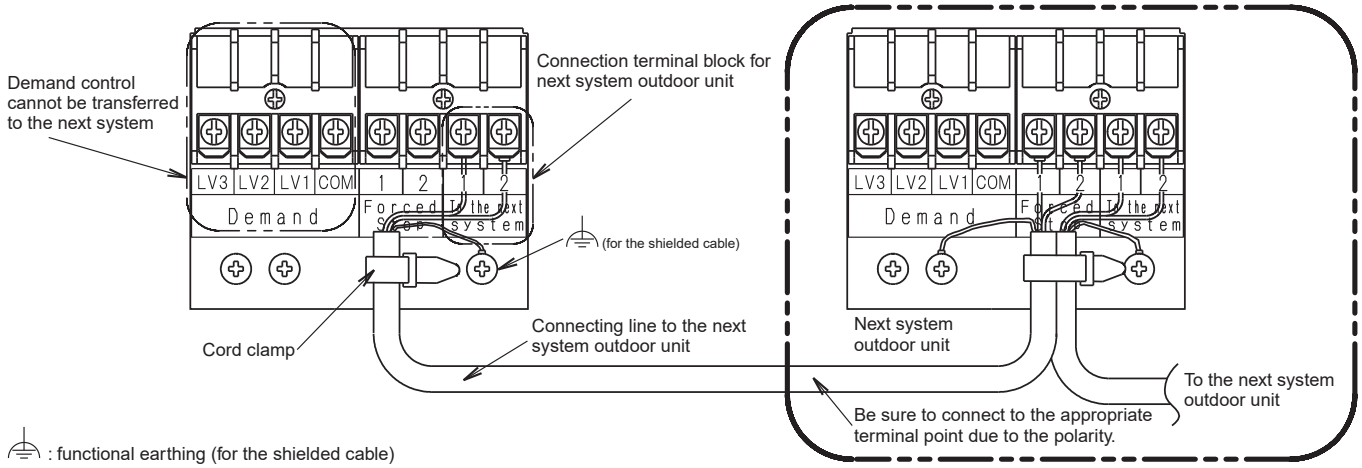

■ WIRING PROCEDURE

Follow the wiring procedure below for the terminal connection.

1. Secure and clamp the power and signal lines with the tie, set up close to the valve.
2. Set the wiring and cables for the power and signal lines to the outdoor unit together, and secure each wire and cable with the tie.
3. Set up the wiring and cable for the outdoor unit piping and secure with a tie.

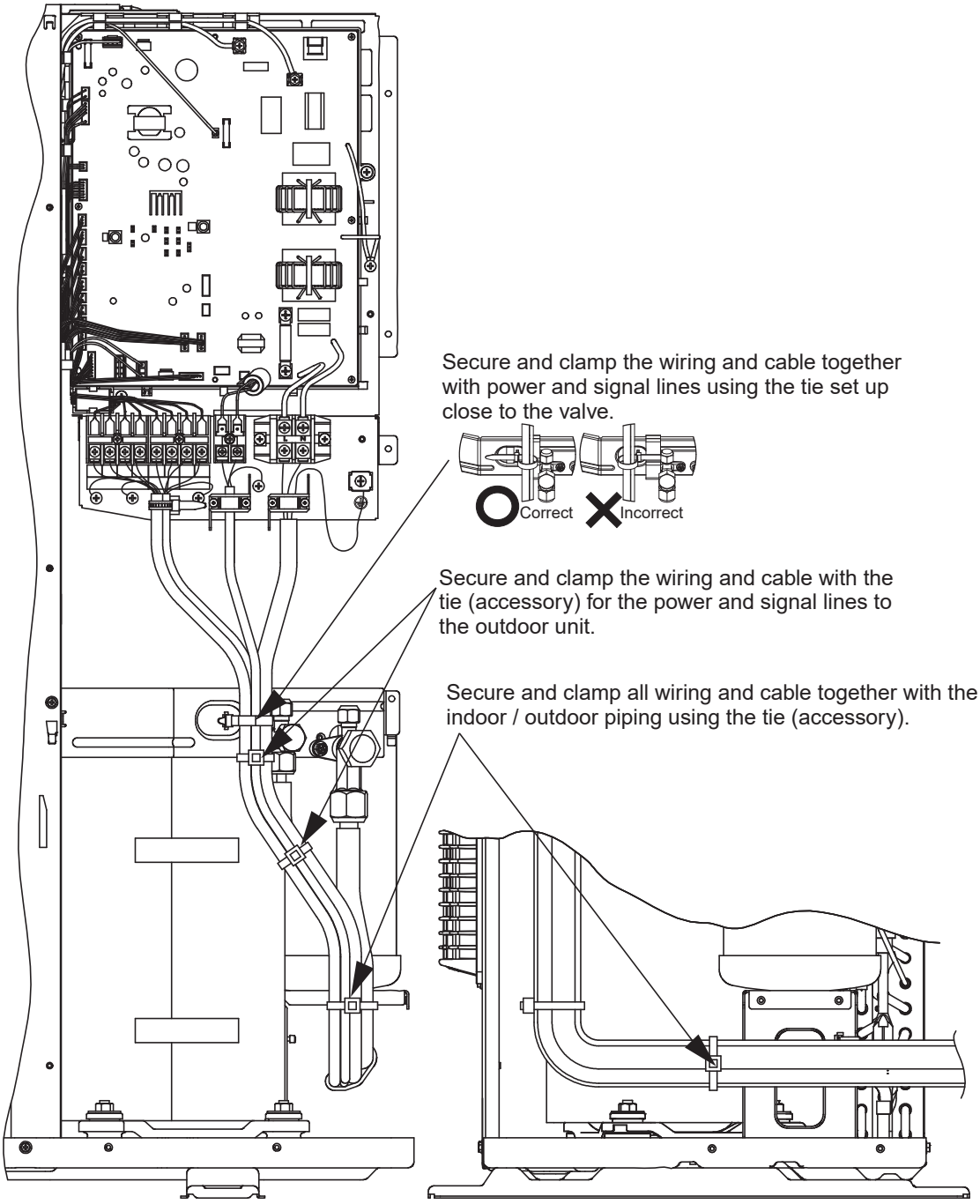

■ SELECTING THE INSTALLATION SITE

2. 4-Way Cassette Type (U2)

Indoor Unit

AVOID:

- areas where leakage of flammable gas may be expected.
- places where large amounts of oil mist exist.
- direct sunlight.
- locations near heat sources which may affect the performance of the unit.
- locations where external air may enter the room directly. This may cause “condensation” on the air discharge ports, causing them to spray or drip water.
- locations where the remote controller will be splashed with water or affected by dampness or humidity.
- installing the remote controller behind curtains or furniture.
- locations where high-frequency emissions are generated.

DO:

- select an appropriate position from which every corner of the room can be uniformly cooled.
- select a location where the ceiling is strong enough to support the weight of the unit.
- select a location where tubing and drain pipe have the shortest run to the outdoor unit.
- allow room for operation and maintenance as well as unrestricted air flow around the unit.
- the limitation of the tubing length between the indoor and the outdoor units should be referred to the Installation Instructions of the outdoor unit.
- allow room for mounting the remote controller about 1 m off the floor, in an area that is not in direct sunlight or in the flow of cool air from the indoor unit.

4-Way Cassette Type

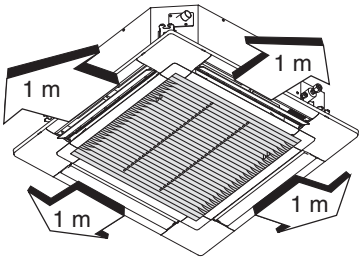

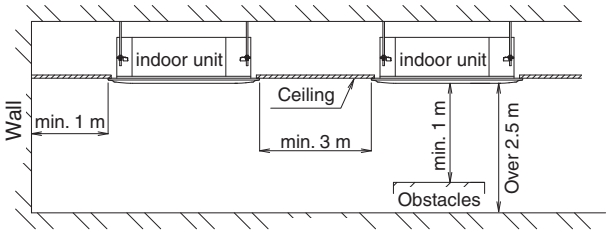

■ HOW TO INSTALL THE INDOOR UNIT

Preparation for Suspending

This unit uses a drain pump. Use a carpenter's level to check that the unit is level.

Note: For DC Fan Tap Change Procedure for 4-Way Cassette, see page 1-11-2-13.

Suspending the Indoor Unit

(1) Fix the suspension bolts securely in the ceiling using the method shown in the diagrams, by attaching them to the ceiling support structure, or by any other method that ensures that the unit will be securely and safely suspended.

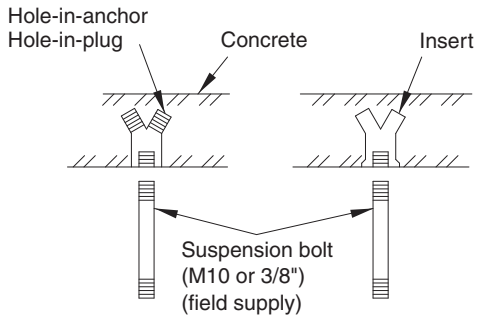

(2) Follow the diagram to make the holes in the ceiling.

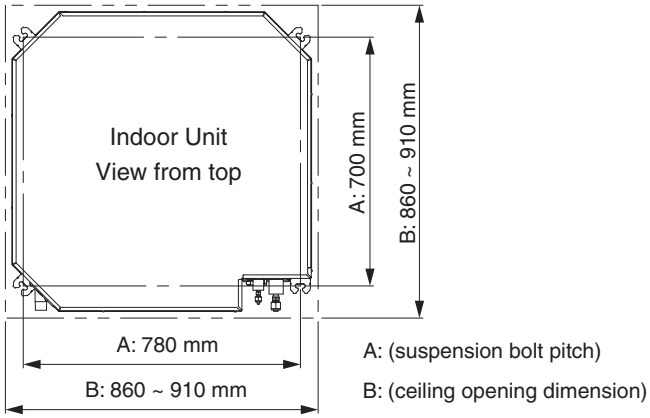

(3) Determine the pitch of the suspension bolts using the supplied full-scale installation diagram (printed on container box). The diagram show the relationship between the positions of the suspension fitting, unit, and panel. Use the nut (field supply) and washer (supplied) for upper and lower position of the suspension lug.

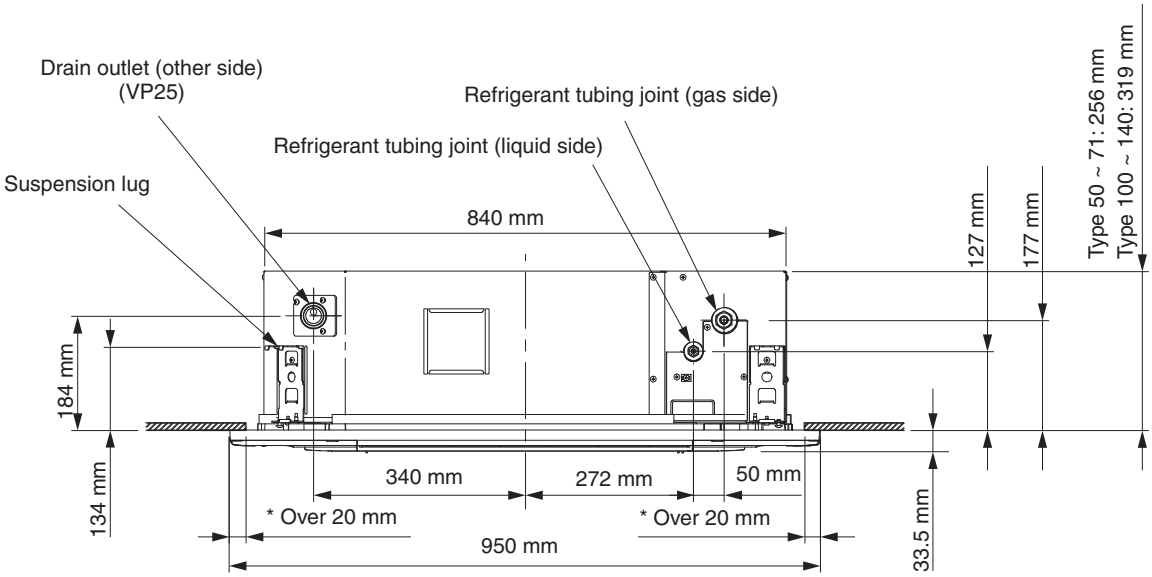

* The overlapping portion between the ceiling and panel for cassette should be kept over 20 mm.

Placing the Unit Inside the Ceiling

This unit is equipped with the drain pump. Check a tape measure or carpenter's level.
Before installing the panel for cassette, complete the work of drain pipe and refrigerant pipe installation.

(1) When placing the unit inside the ceiling, determine the pitch of the suspension bolts using the supplied full-scale installation diagram.
Tubing and wiring must be laid inside the ceiling when suspending the unit. If the ceiling is already constructed, lay the tubing and wiring into position for connection to the unit before placing the unit inside the ceiling.

(2) The length of suspension bolts must be appropriate for a distance between the bottom of the bolt and the bottom of the unit of more than 18 mm.

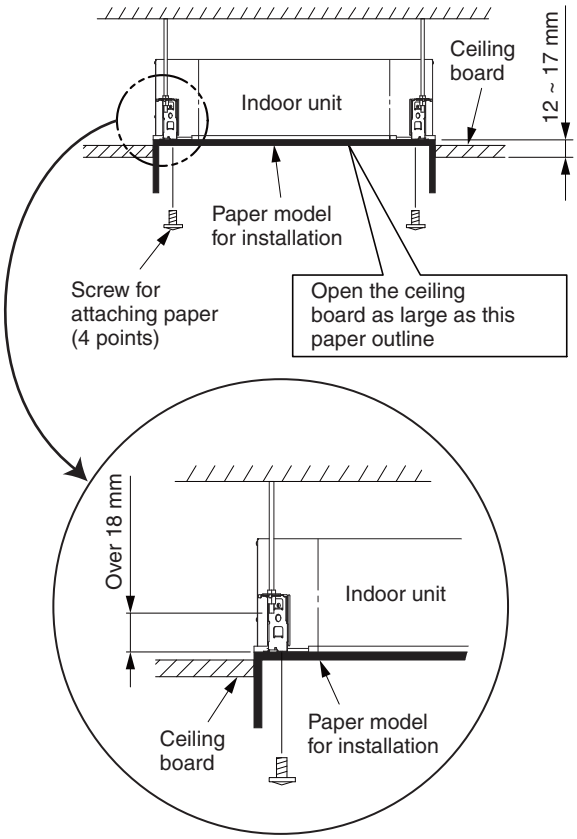

Full-scale installation diagram
(printed on top of container box)

(3) Thread the 3 hexagonal nuts and 2 washers onto each of the 4 suspension bolts. Use 1 nut and 1 washer for the upper side, and 2 nuts and 1 washer for the lower side, so that the unit will not fall off the suspension lugs.

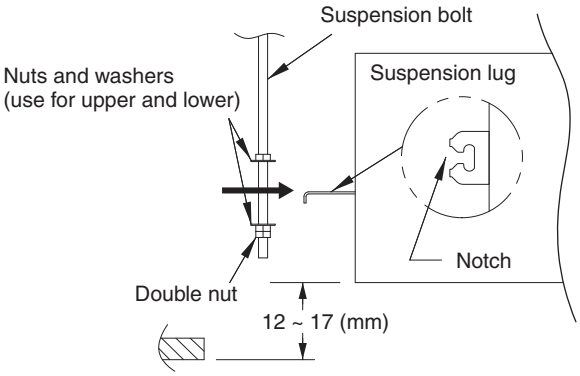

(4) Adjust so that the distance between the unit and the ceiling bottom is 12 to 17 mm. Tighten the nuts on the upper side and lower side of the suspension lug.

(5) Remove the protective polyethylene used to protect the fan parts during transport.

(6) Check with a tape measure or carpenter's level.

Installing the Drain Pipe

Before Performing the Installation Drain Piping

(1) Limitations of Raising the Drain Pipe Connection

CAUTION

- The drain pipe can be raised to a maximum height of 850 mm from the bottom of the ceiling.
  Do not attempt to raise it higher than 850 mm.
  Doing so will result in water leakage.

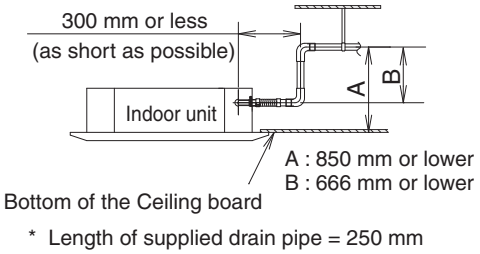

(2) Limitations of Drain Pipe Connection

CAUTION

- Do not install the drain pipe with an upward gradient from the drain port connection. This will cause the drain water to flow backward and leak when the unit is not operating.
- Do not install an air bleeder as this may cause water to spray from the drain pipe outlet.
- Do not provide U-trap or bell-shaped trap in the middle of the drain pipe. Doing so will cause abnormal sound.

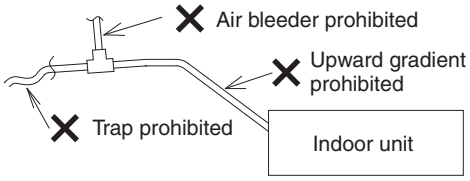

- Make sure the drain pipe has a downward gradient (1/100 or more; downward from drain port connection).

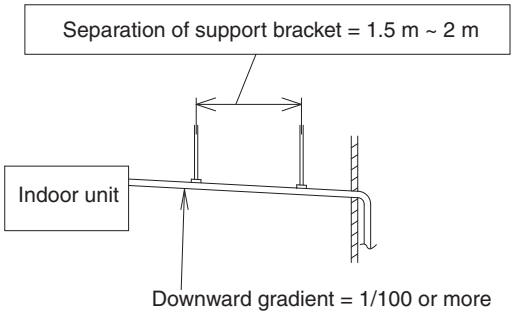

(3) Limitations of Drain Hose Connection

CAUTION

- Do not bend the supplied drain hose 90° or more.
  Bend it less than 45°.

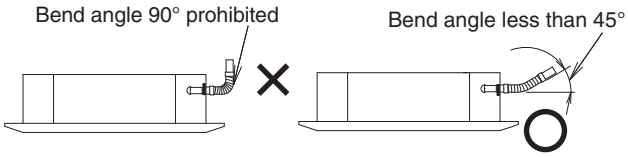

- Do not make a trap in the middle of the supplied drain hose. Doing so will cause abnormal sound.

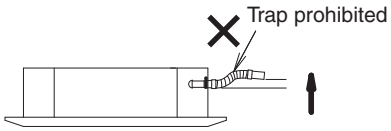

Installing the Drain Pipe

CAUTION

- Do not apply force to the drain port when connecting the drain pipe. Install and fix it near the indoor unit as close as possible.
- Do not use adhesive when connecting the drain port pipe and the drain hose.

(1) How to Install the Drain Pipe

1) First insert the supplied hose band into the drain port pipe. Then make sure the head of the screw is facing toward a technical engineer when placing the screw of the hose band at an upward angle.
2) Insert the soft PVC socket of the supplied drain hose to the drain port pipe. Do not use adhesive when connecting the drain hose to the drain port pipe. Insert it until the tip of the drain hose contacts the uneven surface of the drain port pipe.
3) Move the hose band so that the center position of the hose band can be placed approx. 30 mm away from the external plate of the indoor unit. See diagram below.
4) Screw the drain hose tightly facing the screw of the hose band upward. (Torque: 2.5 N·m - 3.4 N·m) (If the screw is tightened beneath the drain hose, the troubles will be generated.)
5) Apply approx. 2 g of adhesive on both sides of the drain hose without connection of the hard PVC socket and the hard PVC pipe joint (VP25) in the local supply.
6) Connect the drain hose and the hard PVC pipe joint so that the adhesive area of both sides can be overlapped. Wipe off the protrusion-adhesive with a soft cloth.

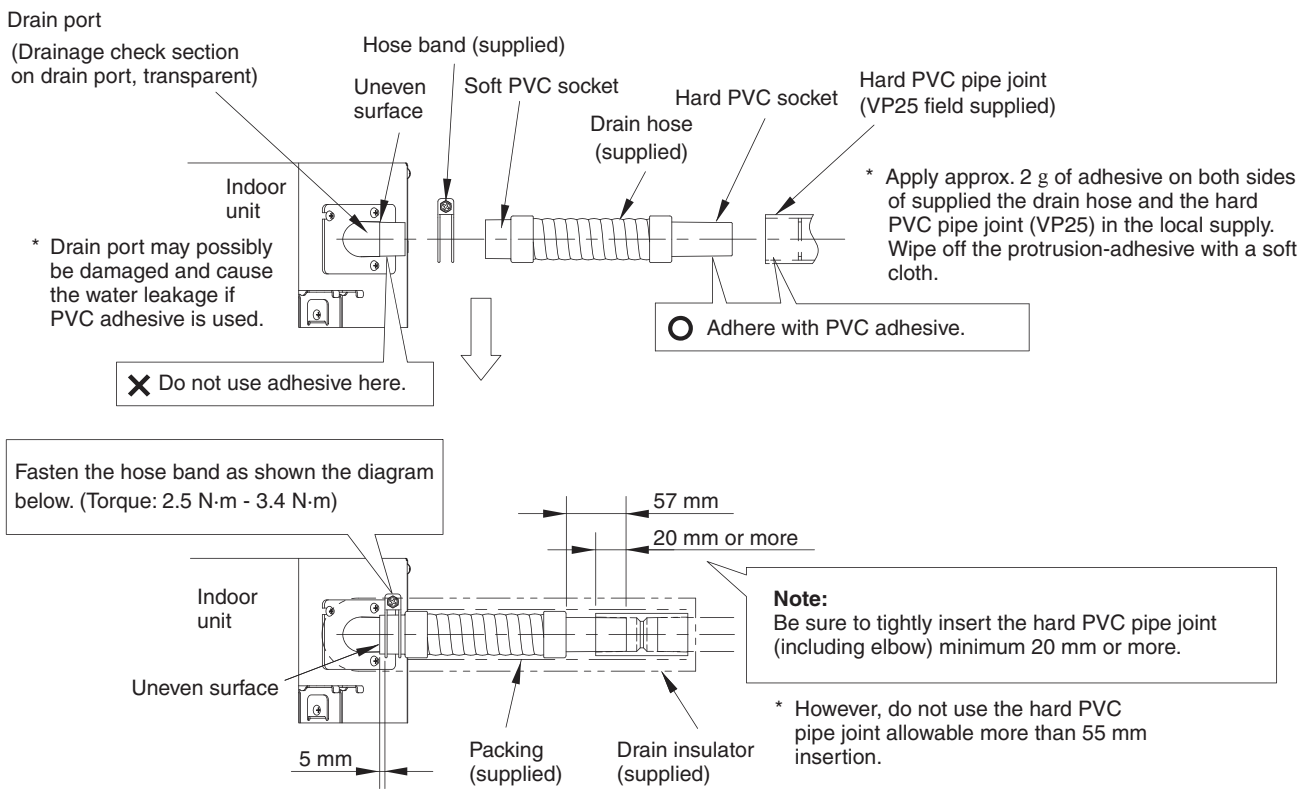

* After checking the drainage, wrap the supplied packing and drain pipe insulator around the pipe.

Checking the Drainage

CAUTION **Be careful since the fan will start when you short the pin on the indoor control board.**

After wiring (refer to 1-10. Electrical Wiring.) and drain piping are completed, use the following procedure to check that the water will drain smoothly. For this, prepare a bucket and wiping cloth to catch and wipe up spilled water.

(1) Connect power to the power terminal board (L, N terminals) inside the electrical component box.

(2) Slowly pour about 1 L of water into the drain pan to check drainage.

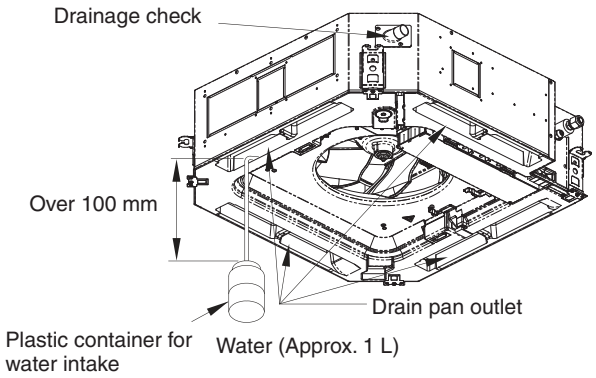

(3) Short the check pin (CHK) (6P : 5-6) on the indoor control board and operate the drain pump. Check the water flow through the transparent drain pipe and see if there is any leakage.
   * If the check pin (CHK) (6P:5-6) is shorted, the fan starts rotating at high speed and could cause injury.

(4) When the check of drainage is complete, open the check pin (CHK) (6P : 5-6) and remount the tube cover.

(5) Checkpoint after installation
   After installation of indoor and outdoor units, panels and electrical wiring, check the following items.

Important Note for Wiring 4-Way Cassette Type

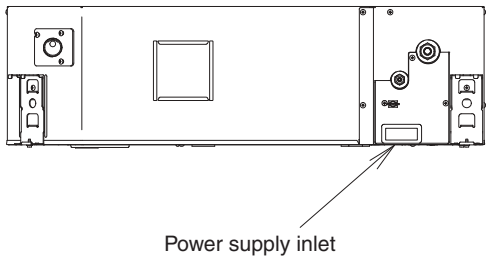

(1) The power supply inlet is located at the lower area of the refrigerant tubing side of the unit. The electrical component box is located at the air intake of the bottom of the unit.

(2) Before installing the panel for cassette, be sure to carry out the wiring connection.

(3) Remove the lid located on the bottom of the indoor unit attaching the electrical component box by unscrewing the Phillips head tapping screws (×2).

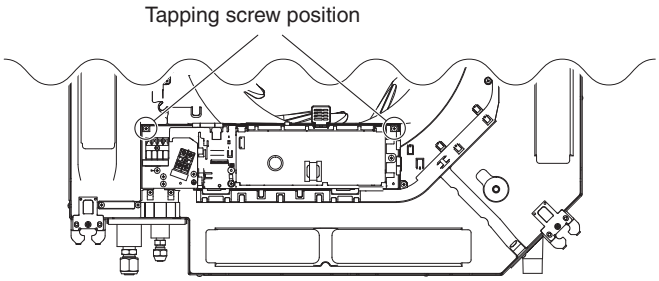

(4) Lead the wires from the power supply inlet to the unit. Be sure to lead the wires through the power supply inlet. Make sure that no wire is caught between the indoor unit and panel for cassette. Otherwise, the unit may cause a fire.

(5) Connect the wires into the terminals through the power supply inlet for the electrical component box.
   Fix the wires with a clamping clip.

(6) Reinstall the lid of the electrical component box in its original position with paying attention not to have the wires caught in the lid.
   Refer to “1-10. Electrical Wiring”.

■ HOW TO PROCESS TUBING

Must ensure mechanical connections be accessible for maintenance purposes.

Connecting the Refrigerant Tubing

NOTE

When connecting flare at indoor side, make sure that the flare connection is used only once. If torqued up and released, the flare must be remade. Once the flare connection was torqued up correctly and leak test was made, thoroughly clean and dry the surface to remove oil, dirt and grease by following instructions of silicone sealant. Apply neutral cure & ammonia-free silicone sealant that is non-corrosive to copper & brass to the external of the flared connection to prevent the ingress of moisture on both the gas & liquid sides. (Moisture may cause freezing and premature failure of the connection.)

Use of the Flaring Method

Many of conventional split system air conditioners employ the flaring method to connect refrigerant tubes that run between indoor and outdoor units. In this method, the copper tubes are flared at each end and connected with flare nuts.

Flaring Procedure with a Flare Tool

(1) Cut the copper tube to the required length with a tube cutter. It is recommended to cut approx. 30 – 50 cm longer than the tubing length you estimate.

(2) Remove burrs at each end of the copper tubing with a tube reamer or a similar tool. This process is important and should be done carefully to make a good flare. Be sure to keep any contaminants (moisture, dirt, metal filings, etc.) from entering the tubing.

Deburring

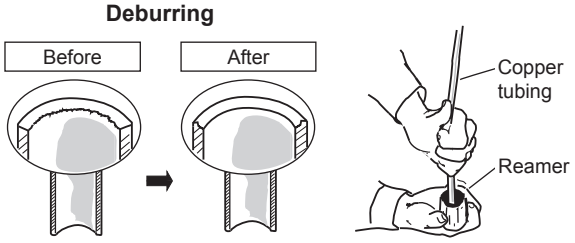

NOTE

When reaming, hold the tube end downward and be sure that no copper scraps fall into the tube.

(3) Remove the flare nut from the unit and be sure to mount it on the copper tube.

(4) Make a flare at the end of the copper tube with a flare tool.

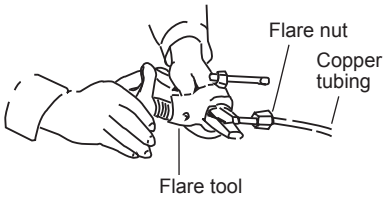

NOTE

When flared joints are reused, the flare part shall be re-fabricated.
A good flare should have the following characteristics:

- inside surface is glossy and smooth
- edge is smooth
- tapered sides are of uniform length

Caution Before Connecting Tubes Tightly

(1) Apply a sealing cap or water-proof tape to prevent dust or water from entering the tubes before they are used.

(2) Be sure to apply refrigerant lubricant (ether oil) to the inside of the flare nut before making piping connections. This is effective for reducing gas leaks.

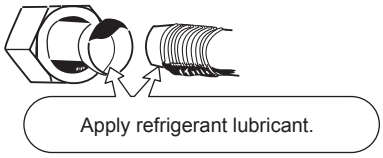

(3) For proper connection, align the union tube and flare tube straight with each other, then screw on the flare nut lightly at first to obtain a smooth match.

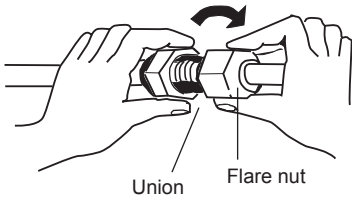

- Adjust the shape of the liquid tube using a tube bender at the installation site and connect it to the liquid tubing side valve using a flare.

Connecting Tubing Between Indoor and Outdoor Units

(1) Tightly connect the indoor-side refrigerant tubing extended from the wall with the outdoor-side tubing.

Indoor Unit Tubing Connection (ℓ_1, ℓ_2...ℓ_{n-1})

Indoor unit type	50	60	71	100	125	140
Gas tubing (mm)	ø12.7	ø15.88				
Liquid tubing (mm)	ø6.35	ø9.52				

(2) To fasten the flare nuts, apply specified torque.

- When removing the flare nuts from the tubing connections, or when tightening them after connecting the tubing, be sure to use a torque wrench and a spanner.
  If the flare nuts are over-tightened, the flare may be damaged, which could result in refrigerant leakage and cause injury or asphyxiation to room occupants.

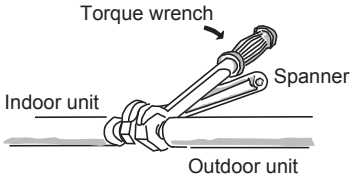

- For the flare nuts at tubing connections, be sure to use the flare nuts that were supplied with the unit, or else flare nuts for R410A, R32 (type 2). The refrigerant tubing that is used must be of the correct wall thickness as shown in the table below.

Tube diameter	Tightening torque (approximate)	Tube thickness
ø6.35 (1/4")	14 – 18 N · m {140 – 180 kgf · cm}	0.8 mm
ø9.52 (3/8")	34 – 42 N · m {340 – 420 kgf · cm}	0.8 mm
ø12.7 (1/2")	49 – 55 N · m {490 – 550 kgf · cm}	0.8 mm
ø15.88 (5/8")	68 – 82 N · m {680 – 820 kgf · cm}	1.0 mm

  Because the pressure is approximately 1.6 times higher than conventional refrigerant R22 pressure, the use of ordinary flare nuts (type 1) or thin-walled tubes may result in tube rupture, injury, or asphyxiation caused by refrigerant leakage.
- In order to prevent damage to the flare caused by over-tightening of the flare nuts, use the table above as a guide when tightening.
- When tightening the flare nut on the liquid tube, use an adjustable wrench with a nominal handle length of 200 mm.

Insulating the Refrigerant Tubing

Tubing Insulation

Must ensure that pipe-work shall be protected from physical damage.

- Thermal insulation must be applied to all units tubing, including distribution joint (field supply).
  * For gas tubing, the insulation material must be heat resistant to 120°C or above. For other tubing, it must be heat resistant to 80°C or above.

  Insulation material thickness must be 10 mm or greater.

  If the conditions inside the ceiling exceed DB 30°C and RH 70%, increase the thickness of the gas tubing insulation material by 1 step.

Two tubes arranged together

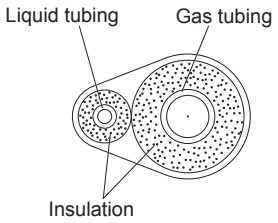

CAUTION

If the exterior of the outdoor unit valves has been finished with a square duct covering, make sure you allow sufficient space to access the valves and to allow the panels to be attached and removed.

Ensure to do the re-flaring of pipes before connecting to units to avoid leaking.

To prevent the ingress of moisture into the joint which could have the potential to freeze and then cause leakage, the joint must be sealed with suitable silicone and insulation material. The joint should be sealed on both liquid and gas side.

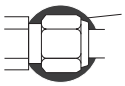

Insulation material and silicone sealant. Please ensure there are no gaps where moisture can enter the joint.

Silicone Sealant must be neutral cure and ammonia free. Use of silicon containing ammonia can lead to stress corrosion on the joint and cause leakage.

Taping the flare nuts

Wind the white insulating tape around the flare nuts at the gas tube connections. Then cover up the tubing connections with the flare insulator, and fill the gap at the union with the supplied black insulating tape. Finally, fasten the insulator at both ends with the supplied vinyl clamps.

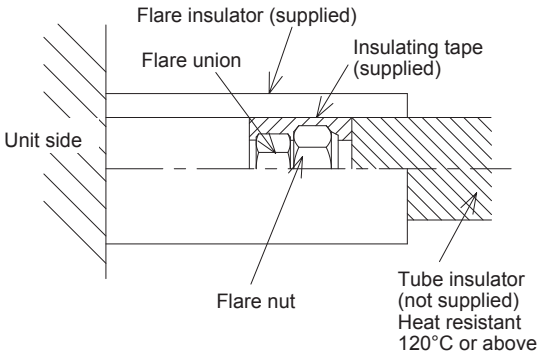

Insulation material

The material used for insulation must have good insulation characteristics, be easy to use, be age resistant, and must not easily absorb moisture.

CAUTION

After a tube has been insulated, never try to bend it into a narrow curve because it can cause the tube to break or crack.
Never grasp the drain or refrigerant connecting outlets when moving the unit.

Taping the Tubes

(1) At this time, the refrigerant tubes (and electrical wiring if local codes permit) should be taped together with armoring tape in 1 bundle. To prevent condensation from overflowing the drain pan, keep the drain hose separate from the refrigerant tubing.

(2) Wrap the armoring tape from the bottom of the outdoor unit to the top of the tubing where it enters the wall. As you wrap the tubing, overlap half of each previous tape turn.

(3) Clamp the tubing bundle to the wall, using 1 clamp approx. each meter.

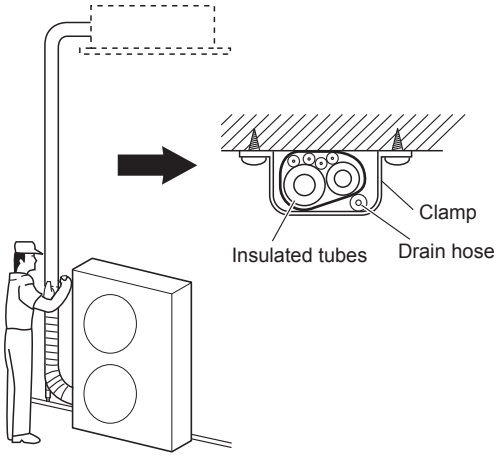

NOTE

Do not wind the armoring tape too tightly since this will decrease the heat insulation effect. Also ensure that the condensation drain hose splits away from the bundle and drips clear of the unit and the tubing.

Finishing the Installation

After finishing insulating and taping over the tubing, use sealing putty to seal off the hole in the wall to prevent rain and draft from entering.

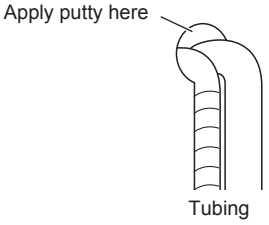

■ HOW TO INSTALL THE TIMER REMOTE CONTROLLER OR HIGH-SPEC WIRED REMOTE CONTROLLER (OPTIONAL PART)

NOTE

See “Section 2. TEST RUN”.

Accessories Supplied with Unit

(4-Way Cassette)

Part Name	Figure	Q’ty	Remarks
Full-scale installation diagram	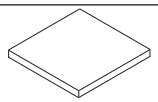	1	Printed on container box
Washer	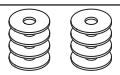	8	For suspension bolts
Screw		4	For full-scale installation diagram
Insulating tape		2	For gas and liquid tube flare nuts
Flare insulator	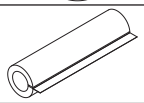	1	For liquid tube
Flare insulator	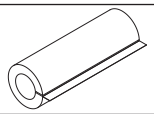	1	For gas tube
Drain hose	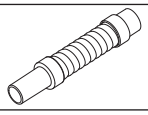	1	
Hose band		1	For securing drain hose
Packing	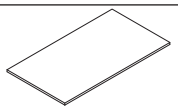	1	
Drain insulator	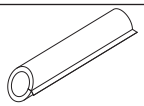	1	
Clamper	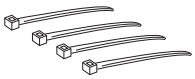	4	For electrical wiring
Operating Instructions		1	
Installation Instructions		1	

- Use M10 for suspension bolts.
- Field supply for suspension bolts and nuts.

Type of Copper Tube and Insulation Material

If you wish to purchase these materials separately from a local source, you will need:

1. Deoxidized annealed copper tube for refrigerant tubing.
2. Foamed polyethylene insulation for copper tubes as required to precise length of tubing. Wall thickness of the insulation should be not less than 8 mm.
3. Use insulated copper wire for field wiring. Wire size varies with the total length of wiring. See the section “1-10. Electrical Wiring” for details.

CAUTION

Check local electrical codes and regulations before obtaining wire. Also, check any specified instructions or limitations.

Additional Materials Required for Installation

1. Refrigeration (armored) tape
2. Insulated staples or clamps for connecting wire (See your local codes.)
3. Putty
4. Refrigeration tubing lubricant
5. Clamps or saddles to secure refrigerant tubing
6. Scale for weighing

4-Way Cassette Type (Type U2)
CZ-KPU3
Accessories

Panel for cassette ×1	Screws ×4
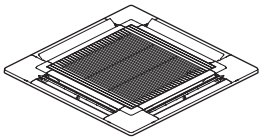	4 × 12 

Preparation for Panel for Cassette Installation

(1) Checking the unit position
1) Check that the ceiling hole is within this range: 860 mm × 860 mm to 910 mm × 910 mm
2) Confirm that the position of the indoor unit and the ceiling as shown in the diagram. If the positions of the ceiling surface and unit do not match, air leakage, water leakage, flap operation failure, or other problems may occur.

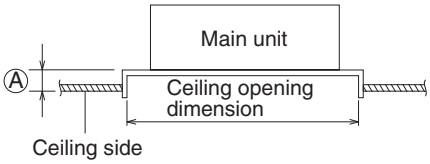

Ⓐ : Be sure to necessarily make a space within the range of 12 mm ~ 17 mm.
If not within this range, malfunction or other trouble may occur.

CAUTION

- **Never place the panel face-down. Either hang it vertically or place it on top of a projecting object. Placing it face-down will damage the surface.**
- **Do not touch the flap or apply force to it. (This may cause flap malfunction.)**

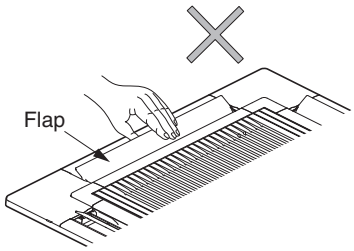

How to Install the Panel for Cassette

(1) Removing the air-intake grille
1) Remove the 2 screws on the latch of the air-intake grille. (Reattach the air-intake grille after installation of the panel for cassette.)
2) Slide the air-intake grille catches in the direction shown by the arrows ① to open the grille.

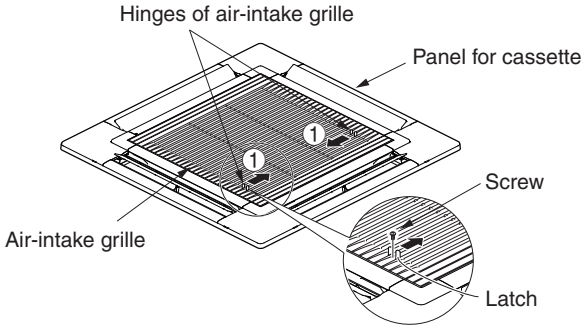

3) With the air-intake grille opened, remove the grille hinge from the panel for cassette by sliding it in the direction shown by the arrow ②. (Reattach the air-intake grille after installation of the panel for cassette.)

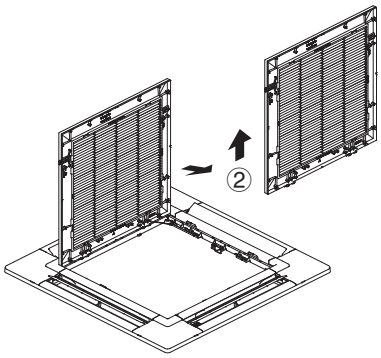

(2) Removing the corner cover
Push the latches on the corner cover in the direction of the arrow ① and remove them by sliding in the direction of the arrow ②.

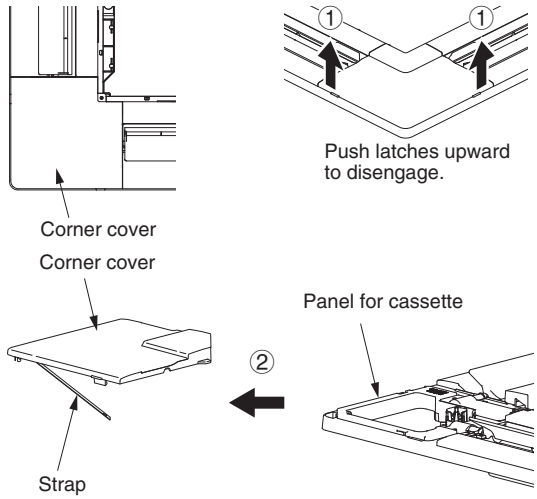

(3) Installing the panel for cassette
The power must be turned ON in order to change the flap angle. (Do not attempt to move the flap by hand. Doing so may damage the flap.)
1) Hang the temporary latches on the inside of the panel for cassette to the receptacle on the unit to temporarily attach the panel for cassette in place.
- The panel for cassette must be installed in the correct direction relative to the unit. Align the REF. PIPE and DRAIN marks on the panel for cassette corner with the correct positions on the unit.
- When removing the panel for cassette, push the temporary latches outward while holding the panel for cassette.

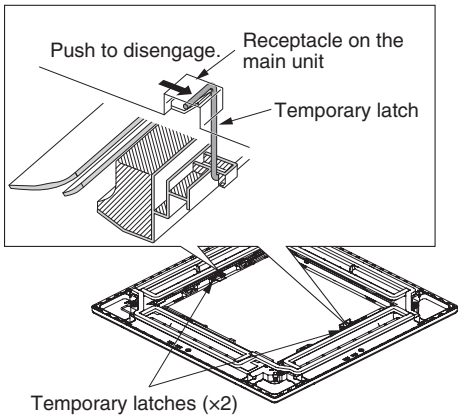

2) Align the panel installation holes and the unit screw holes.
3) Tighten the provided washer head screws at the 4 panel installation locations so that the panel is attached tightly to the unit.

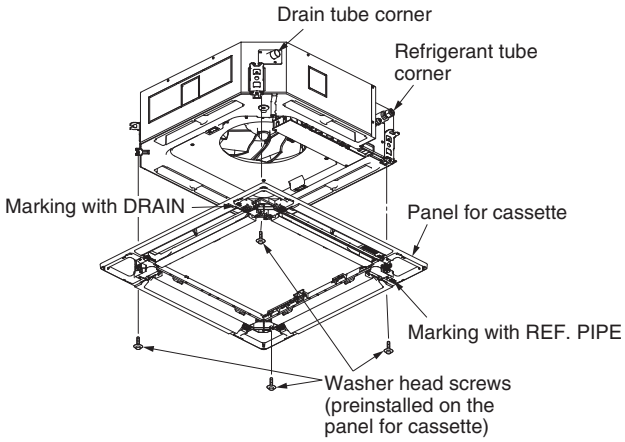

4) Check that the panel is attached tightly to the ceiling.
- At this time, make sure that there are no gaps between the unit and the panel for cassette, or between the panel for cassette and the ceiling surface.

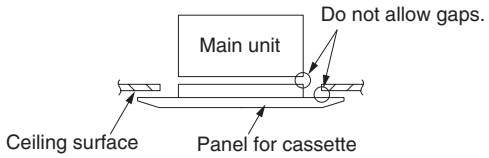

- If there is a gap between the panel and the ceiling, leave the panel for cassette attached and make fine adjustments to the installation height of the unit to eliminate the gap with the ceiling.

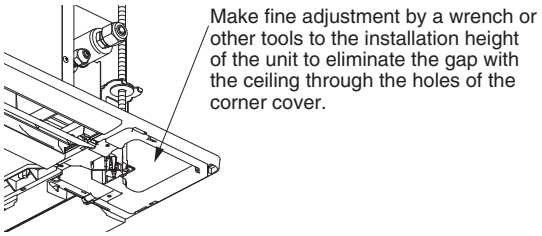

CAUTION

- **If the screws are not sufficiently tightened, trouble such as that shown in the figure below may occur. Be sure to tighten the screws securely.**

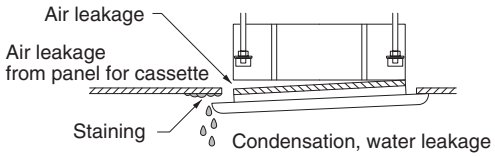

- **If a gap remains between the ceiling surface and the panel for cassette even after the screws are tightened, adjust the height of the unit again.**

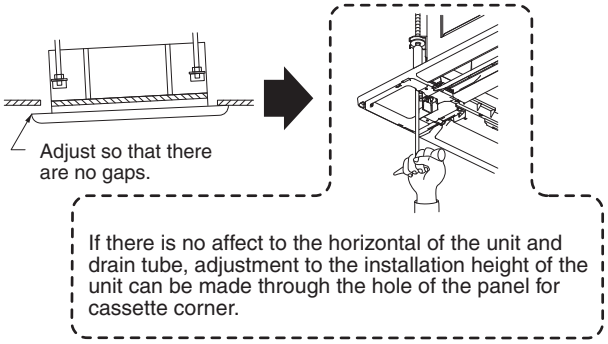

(4) Wiring the Panel for Cassette

1) Open the cover of the electrical component box for control PCB.
2) Connect the 22P connector (white) from the panel for cassette to the connector on the control PCB in the unit electrical component box. In this case, expose the cutout section of the tube for the wiring protection to the outside from the electrical component box and fix it with the clamper attached to the electrical component box.

- **Insert connector lock facing PCB edge until it is locked in place. (If not connected completely, the Auto Flap will not operate and "P09" is displayed on the remote controller. When the connector plugged in the wrong direction, parts on the PCB may be damaged.)**
- **Check that the wiring connector is not caught between the electrical component box and the cover.**
- **Check that the wiring connector is not caught between the unit and the panel for cassette.**

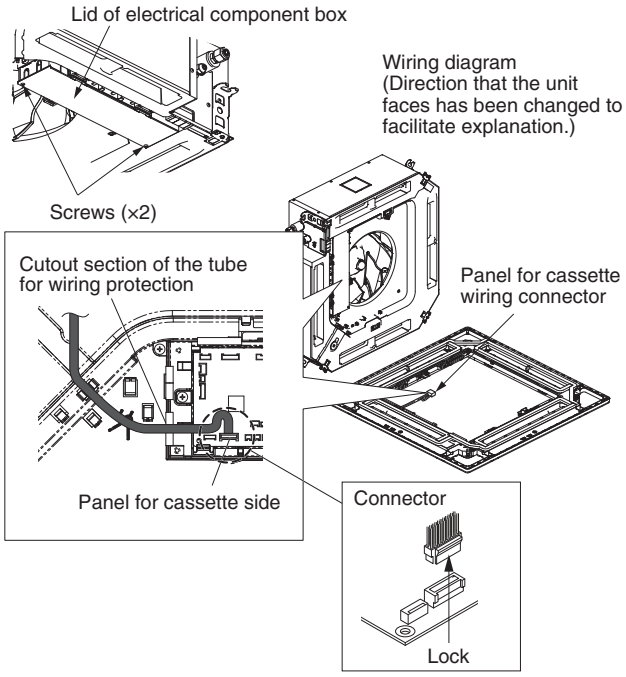

(5) How to Attach the Corner & Air-Intake Grille

A. Attaching the corner cover

1) Check that the safety cord from the corner cover is fastened to the panel for cassette pin, as shown in the figure below.
2) Use the supplied screws to attach the corner cover to the panel for cassette.

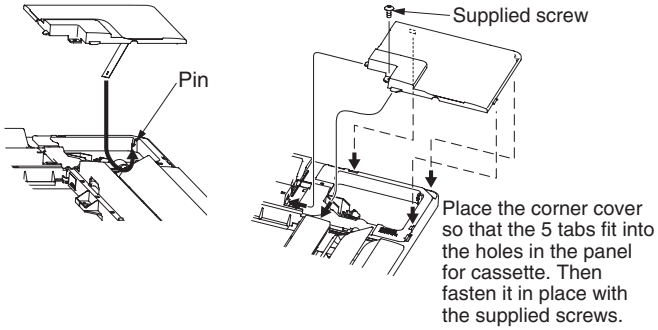

B. Attaching the air-intake grille

- To install the air-intake grille, follow the steps for "Removing the grille" in the reverse order. By rotating the air-intake grille, it is possible to attach the grille onto the panel for cassette from any of 4 directions. Coordinate the directions of the air-intake grilles when installing multiple units, and change the directions according to customer's requests.
- When attaching the air-intake grille, be careful that the flap lead wire does not become caught.
- Be sure to attach the safety cord that prevents the air-intake grille from dropping off to the panel for cassette unit as shown in the figure below.
- With this panel for cassette, the directions of the air-intake grille lattices when installing multiple units, and the position of the label showing the company name on the corner panel, can be changed according to customer's requests, as shown in the figure below. However, the wireless signal receiver can only be installed at the refrigerant-tubing corner of the ceiling unit.

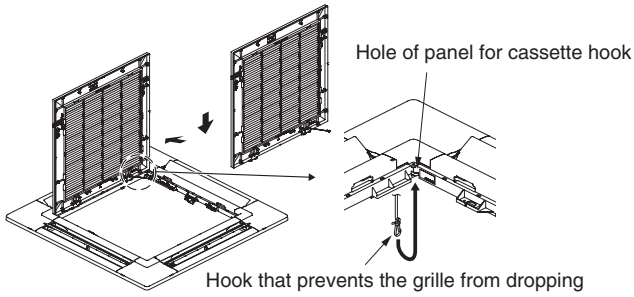

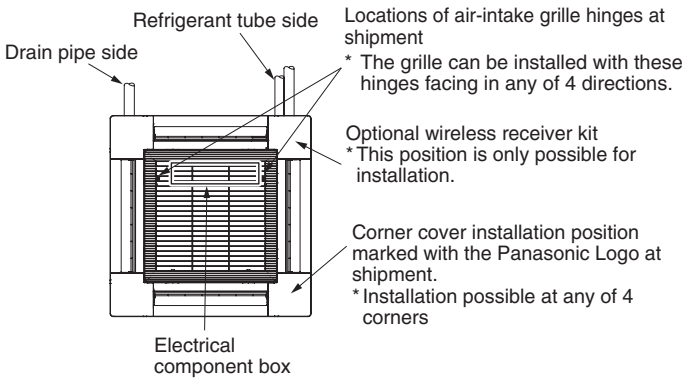

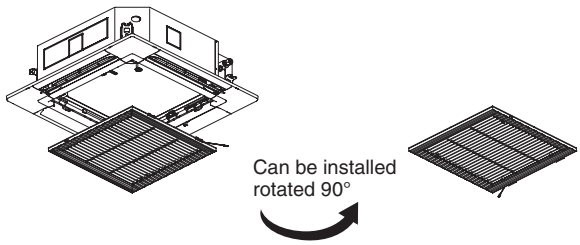

Others

(1) Checking After Installation

1) Check that there are no gaps between the unit and the panel for cassette, or between the panel for cassette and the ceiling surface.
   * Gaps may cause water leakage and condensation.
2) Check that the wiring is securely connected.
   * If it is not securely connected, the auto flap will not operate.
   (“P09” is displayed on the remote controller.)
   In addition, the water leakage and condensation may occur.

(2) Operating the Wireless Remote Controller
For details of installation, refer to the section “Wireless Signal Receiver” in the supplied installation instructions.

(3) Selecting DC Fan Motor Tap (4-Way Cassette)
Check the optional parts accordingly in the following table.

Table for DC Fan Motor Tap Settings

Setting No.	Remote controller setting data Item code 5d	Contents & optional parts name
(1)	0001	Air-flow blocking kit (for 3-way air flow)*2
		Air-flow blocking kit (when a duct is connected.)
		High-ceiling setting 1*2
(3)	0003	High-ceiling setting 2*2
(6)	0006	Air-flow blocking kit (for 2-way air flow)*2

*1 When using optional parts in different setting No. in combination with multiple units, conform it to the larger setting No.

*2 Ceiling height (m)

Indoor unit type	50	60,71	100,125, 140
Standard (factory setting)	2.7	3.0	3.6
High-ceiling setting 1	3.2	3.3	4.3
High-ceiling setting 2	3.5	3.6	5.0
Air-flow blocking kit (for 3-way air flow)	3.8	3.8	4.7
Air-flow blocking kit (for 2-way air flow)	4.2	4.2	5.0

1) When setting on the P.C. Board
<Procedure>
Stop the system before performing these steps.
① Open the electrical component box cover, then check the indoor unit control PCB.
② Change the DIP switch on the indoor unit control PCB in accordance with the setting number which was confirmed in Table for DC Fan Motor Tap Settings.

Setting No.	DIP switch	Setting No.	DIP switch
(1)	TP6 TP3 TP1 ON 1 2 3	(6)	TP6 TP3 TP1 ON 1 2 3
(3)	TP6 TP3 TP1 ON 1 2 3		

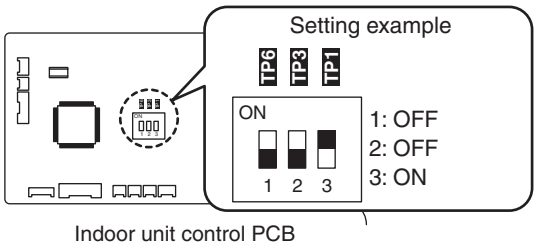

<Procedure of CZ-RTC5A, CZ-RTC5B>
Stop the system before performing these steps.

① Keep pressing the [↩], [↵] and [▶] buttons simultaneously for 4 or more seconds.
The “Maintenance func” screen appears on the LCD display.

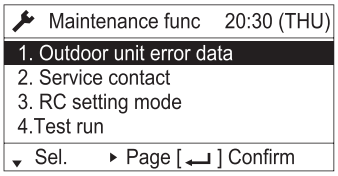

② Press the [▼] or [▲] button to see each menu.
If you wish to see the next screen instantly, press the [◀] or [▶] button.
Select “8. Detailed settings” on the LCD display and press the [↵] button.

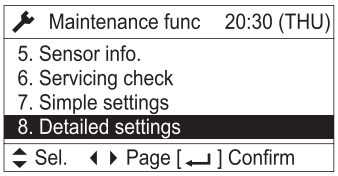

The “Detailed settings” screen appears on the LCD display.

③ Select the “Unit no.” by pressing the ▼ or ▲ button for changes.

Detailed settings		20:30 (THU)
Unit no.	Code no.	Set data
1-1	10	0001
⇕ Sel.	▸ Next	

④ Select the “Code no.” by pressing the ◀ or ▶ button.
Change the “Code no.” to “5D” by pressing the ▼ or ▲ button (or keeping it pressed).

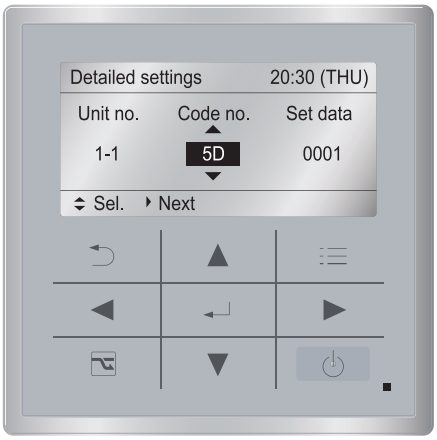

⑤ Select the “Set data” by pressing the ◀ or ▶ button.
Select one of the “Set data” in “Table for DC Fan Motor Tap Settings” by pressing the ▼ or ▲ button.
Then press the ↵ button.

Detailed settings		20:30 (THU)
Unit no.	Code no.	Set data
1-1	5D	0003
⇕ Sel.	[↵] Confirm	

⑥ Press the ↩ button.
The “Exit detailed settings and restart?” (Detailed setting-end) screen appears on the LCD display.
Select “YES” and press the ↵ button.

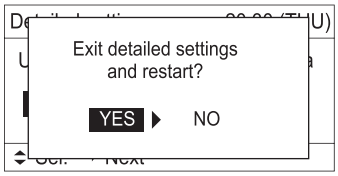

If you wish to change the selected indoor unit, follow the step ②.

<Procedure of CZ-RTC4>
Stop the system before performing these steps.

① Press and hold the ⏻, SET and CANCEL buttons simultaneously for 4 seconds or longer.
② If group control is in effect, press the UNIT button to set.
At this time, the fan at the indoor unit begins and select the address (unit No.) of the indoor unit operating.
③ Designate the item code 5d by adjusting the Temperature Setting ▽/△ buttons.
④ Press the timer time DAY/ /TIMER buttons to select the desired setting data.
*For item codes and setting data, refer to “Table for DC Fan Motor Tap Settings”.
⑤ Press the SET button.
(The display stops blinking and remains lit, and setting is completed.)
If you wish to change the selected indoor unit, follow the step ②.
⑥ Press the ⏻ button to return to normal remote controller display.

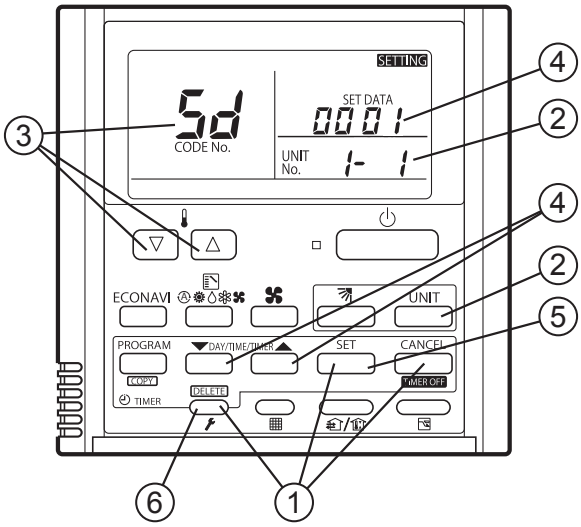

(4) Setting the Flap Separately
1) The 4-air outlet flap can be adjusted separately during operation. When not adjusted separately, all flaps operate in the same manner.

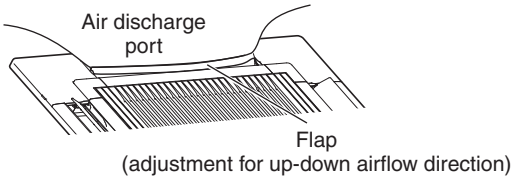

<Procedure of CZ-RTC5A, CZ-RTC5B>
Stop the system before performing these steps.

(1) Keep pressing the [↩] [↵] and [▶] buttons simultaneously for 4 or more seconds.
The "Maintenance func" screen appears on the LCD display.

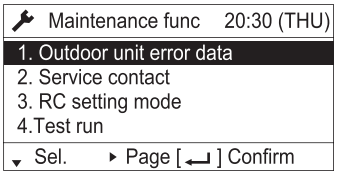

(2) Press the [▼] or [▲] button to see each menu.
If you wish to see the next screen instantly, press the [◀] or [▶] button.
Select "8. Detailed settings" on the LCD display and press the [↵] button.

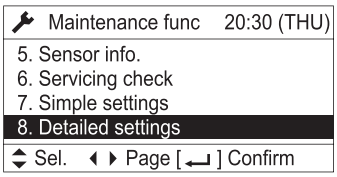

The "Detailed settings" screen appears on the LCD display.

(3) Select the "Unit no." by pressing the [▼] or [▲] button for changes.

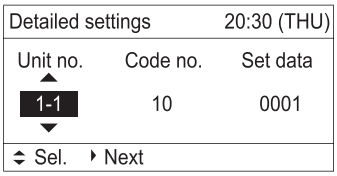

(4) Select the "Code no." by pressing the [◀] or [▶] button.
Change the "Code no." to "***XX***" by pressing the [▼] or [▲] button (or keeping it pressed).

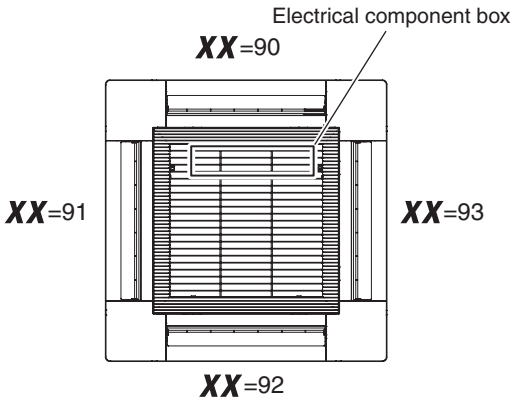

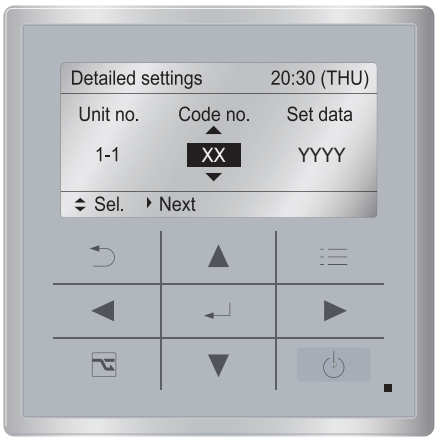

(5) Select the "Set data" by pressing the [◀] or [▶] button.
Select one of the Setting Data "YYYY" by pressing the [▼] or [▲] button.
Then press the [↵] button.

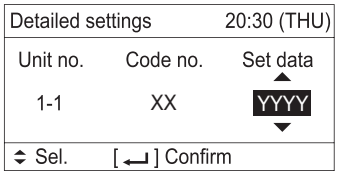

Flap position

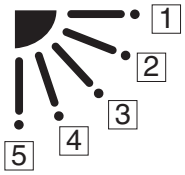

* Setting data "***YYYY***"

Setting data	Flap position during operation
0000	Without separate setting
0001	Swing
0002	Move to position 1 and stay
0003	Move to position 2 and stay
0004	Move to position 3 and stay
0005	Move to position 4 and stay
0006	Move to position 5 and stay

NOTE

The flap swings during the operation under "Setting the Flap Separately".
At this time, the unselected flaps are moved to the position 1.

(6) Press the [↵] button.
The "Exit detailed settings and restart?" (Detailed setting-end) screen appears on the LCD display.
Select "YES" and press the [↵] button.

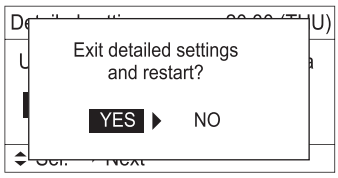

If you wish to change the selected indoor unit, follow the step (2).

<Procedure of CZ-RTC4>

Stop the system before performing these steps.

(1) Press and hold the , SET and CANCEL buttons simultaneously for 4 seconds or longer.

(2) If group control is in effect, press the UNIT button to set. At this time, the fan at the indoor unit begins and select the address (unit No.) of the indoor unit operating.

(3) Designate the item code "***XX***" by adjusting the Temperature Setting ▽/△ buttons.

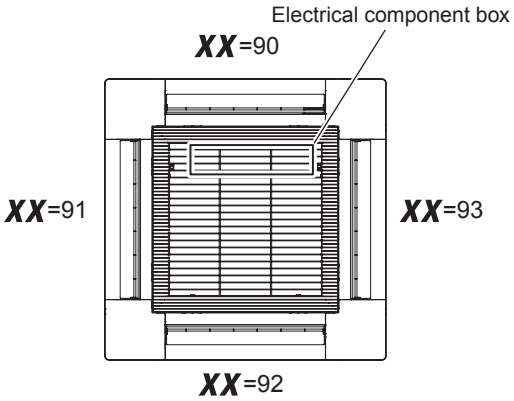

(4) Press the timer time DAY/ /TIMER buttons to select the desired setting data.

Flap position

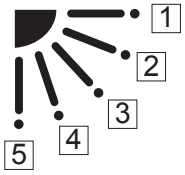

* Setting data "***YYYY***"

Setting data	Flap position during operation
0000	Without separate setting
0001	Swing
0002	Move to position 1 and stay
0003	Move to position 2 and stay
0004	Move to position 3 and stay
0005	Move to position 4 and stay
0006	Move to position 5 and stay

NOTE

The flap swings during the operation under "Setting the Flap Separately".
At this time, the unselected flaps are moved to the position 1.

(5) Press the SET button.
(The display stops blinking and remains lit, and setting is completed.)
If you wish to change the selected indoor unit, follow the step (2).

(6) Press the button to return to normal remote controller display.

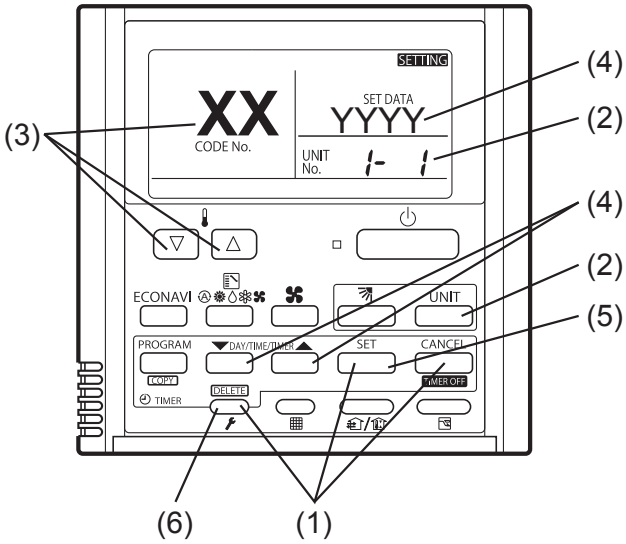

■ HOW TO INSTALL WIRELESS REMOTE CONTROLLER

NOTE

See "Section 8. HOW TO INSTALL THE WIRELESS REMOTE CONTROLLER RECEIVER".

■ Panel for Cassette (ECONAVI type)

CZ-KPU3A
Applicable indoor unit : 4-Way Cassette
Accessories Supplied

Part Name	Figure	Q'ty	Remarks
ECONAVI panel		1	ECONAVI type
Screw		4	4 × 12
Operating Instructions		1	
Installation Instructions		1	

Since the accessories need for installation work, do not dispose of them until the unit of work is complete.

■ CAUTION ON INSTALLATION

Criteria for Human Detection Area

- A place where the blind angle of the Human Detection Sensor cannot detect human.
  Install the panel for cassette (ECONAVI type) so that human motion can be detected.
- If there is a heat source or cooling unit in the detection area, the sensor cannot occasionally detect properly.
- The Floor Temperature Sensor detects within the sensor area of Human Detection Sensor.

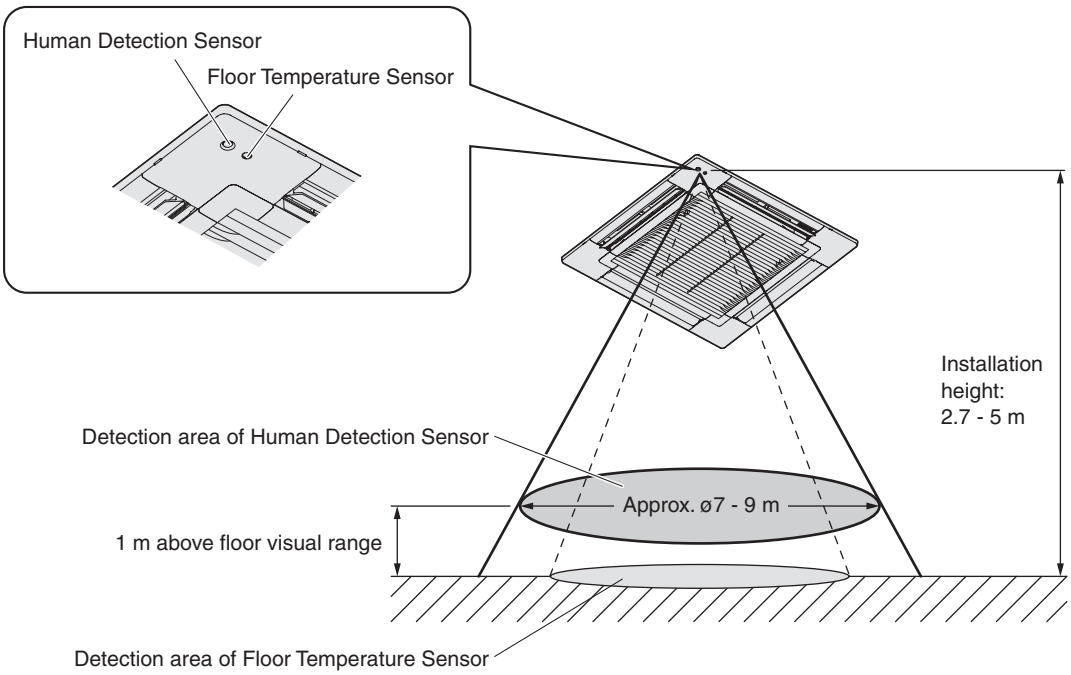

Criteria of human detection sensor area
Installation height of indoor unit 2.7 m : Approx. ø7 m
Installation height of indoor unit 4 m : Approx. ø8 m
Installation height of indoor unit 5 m : Approx. ø9 m

Do not install at the following locations. (Cause of trouble and malfunction)
- Humid, oily, frequent vibration
- Direct sunlight and near by heat source
- Frost

Preparation for Panel for Cassette Installation

(1) Checking the unit position

1) Check that the ceiling hole is within this range: 860 × 860 mm to 910 × 910 mm

2) Confirm that the position of the indoor unit and the ceiling as shown in the diagram. If the positions of the ceiling surface and unit do not match, air leakage, water leakage, flap operation failure, or other problems may occur.

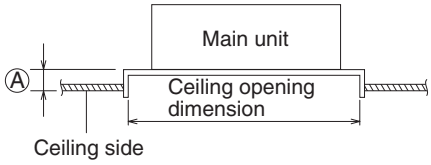

Ⓐ : Be sure to necessarily make a space within the range of 12 ~ 17 mm.

If not within this range, malfunction or other trouble may occur.

CAUTION

- **Never place the panel face-down. Either hang it vertically or place it on top of a projecting object. Placing it face-down will damage the surface.**
- **Do not touch the flap or apply force to it. (This may cause flap malfunction.)**

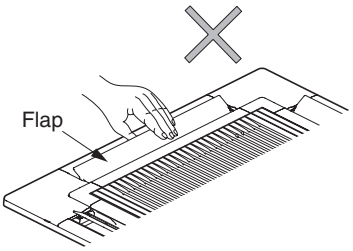

How to Install the Panel for Cassette

(1) Removing the air-intake grille

1) Remove the 2 screws on the latch of the air-intake grille. (Reattach the air-intake grille after installation of the panel for cassette.)

2) Slide the air-intake grille catches in the direction shown by the arrows ① to open the grille.

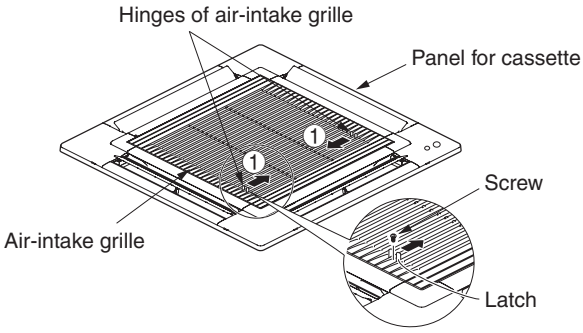

3) With the air-intake grille opened, remove the grille hinge from the panel for cassette by sliding it in the direction shown by the arrow ②. (Reattach the air-intake grille after installation of the panel for cassette.)

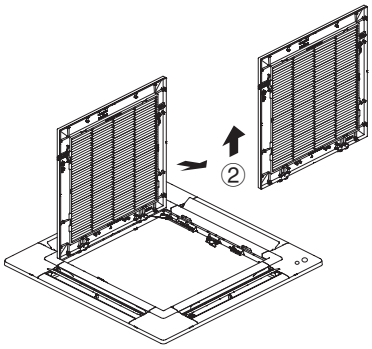

(2) Removing the corner cover

Push the latches on the corner cover in the direction of the arrow ① and remove them by sliding in the direction of the arrow ②.

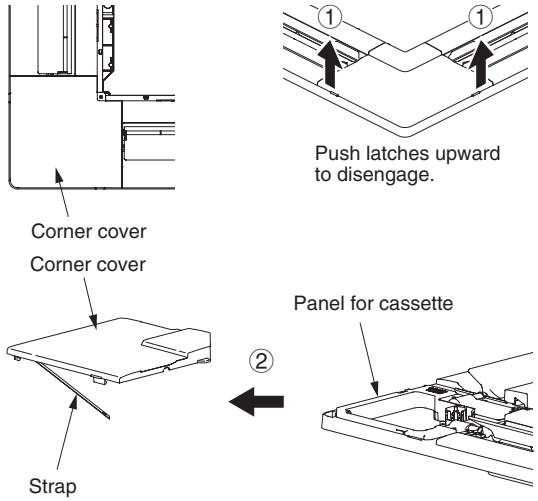

(3) Installing the panel for cassette
The power must be turned ON in order to change the flap angle. (Do not attempt to move the flap by hand. Doing so may damage the flap.)

1) Hang the temporary latches on the inside of the panel for cassette to the receptacle on the unit to temporarily attach the panel for cassette in place.

- The panel for cassette must be installed in the correct direction relative to the unit. Align the REF. PIPE and DRAIN marks on the panel for cassette corner with the correct positions on the unit.
- When removing the panel for cassette, push the temporary latches outward while holding the panel for cassette.

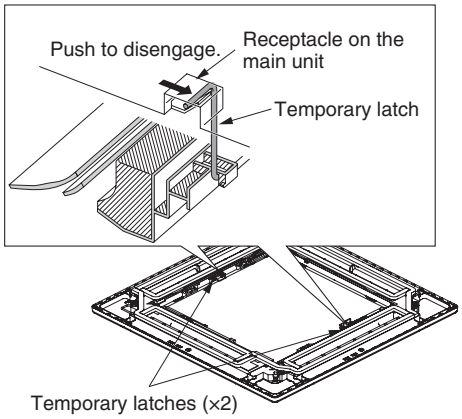

2) Align the panel installation holes and the unit screw holes.

3) Tighten the provided washer head screws at the 4 panel installation locations so that the panel is attached tightly to the unit.

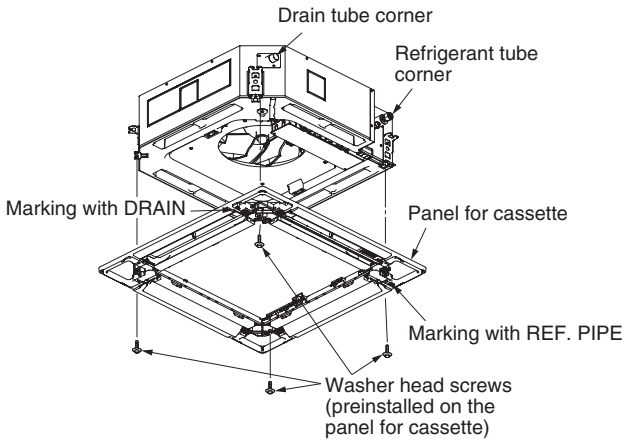

4) Check that the panel is attached tightly to the ceiling.

- At this time, make sure that there are no gaps between the unit and the panel for cassette, or between the panel for cassette and the ceiling surface.

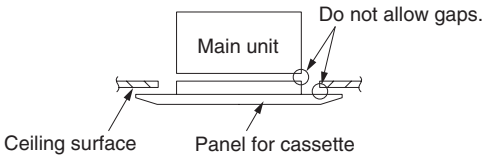

- If there is a gap between the panel and the ceiling, leave the panel for cassette attached and make fine adjustments to the installation height of the unit to eliminate the gap with the ceiling.

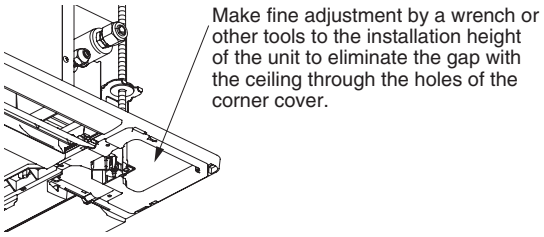

CAUTION

- **If the screws are not sufficiently tightened, trouble such as that shown in the figure below may occur. Be sure to tighten the screws securely.**

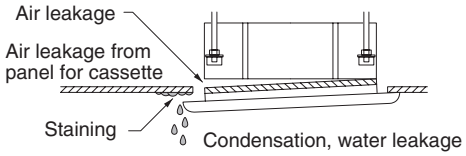

- **If a gap remains between the ceiling surface and the panel for cassette even after the screws are tightened, adjust the height of the unit again.**

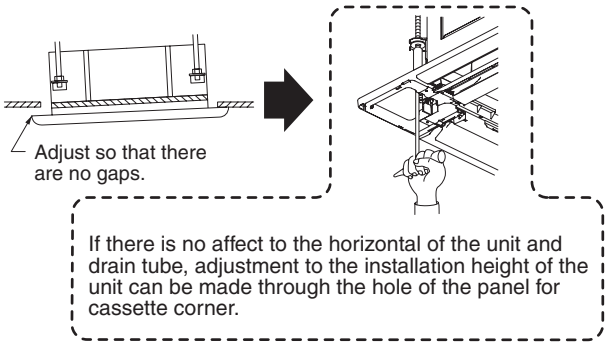

(4) Wiring the Panel for Cassette

1) Open the cover of the electrical component box for control PCB.
2) Connect the 22P connector (white) and 6P connector (white) from the panel for cassette to the connector on the control PCB in the unit electrical component box. In this case, expose the cutout section of the tube for the wiring protection to the outside from the electrical component box and fix it with the clamper attached to the electrical component box.

- **Insert connector lock facing PCB edge until it is locked in place. (If not connected completely, the Auto Flap will not operate and "P09" is displayed on the remote controller. When the connector plugged in the wrong direction, parts on the PCB may be damaged.)**
- **Check that the wiring connector is not caught between the electrical component box and the cover.**
- **Check that the wiring connector is not caught between the unit and the panel for cassette.**

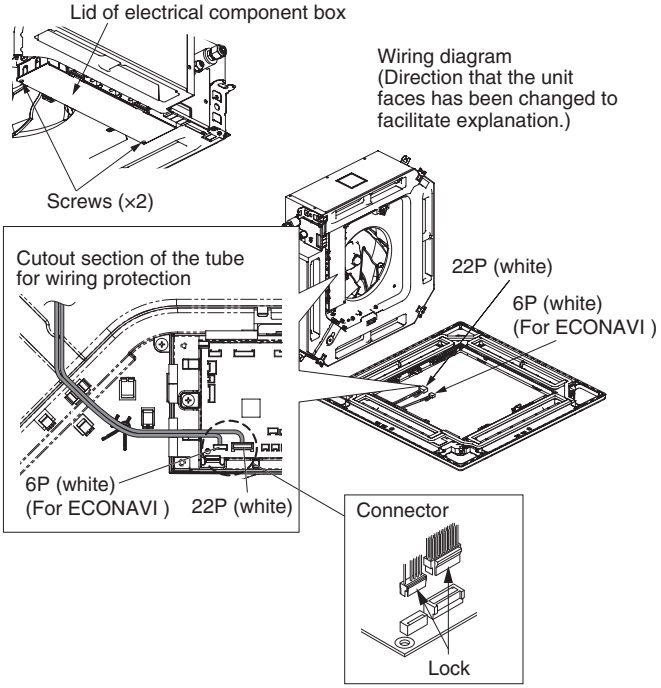

(5) How to Attach the Corner & Air-Intake Grille

A. Attaching the corner cover

1) Check that the safety cord from the corner cover is fastened to the panel for cassette pin, as shown in the figure below.
2) Use the supplied screws to attach the corner cover to the panel for cassette.

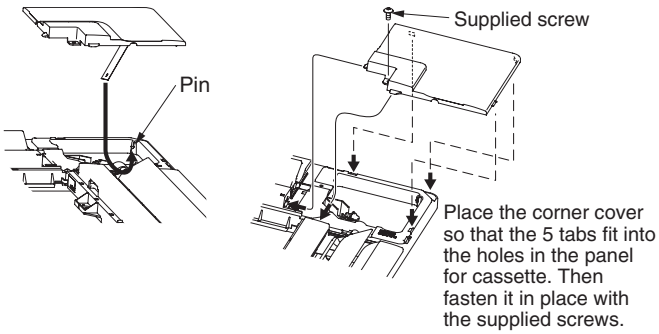

B. Attaching the air-intake grille

- To install the air-intake grille, follow the steps for "Removing the grille" in the reverse order. By rotating the air-intake grille, it is possible to attach the grille onto the panel for cassette from any of 4 directions. Coordinate the directions of the air-intake grilles when installing multiple units, and change the directions according to customer's requests.
- When attaching the air-intake grille, be careful that the flap lead wire does not become caught.
- Be sure to attach the safety cord that prevents the air-intake grille from dropping off to the panel for cassette unit as shown in the figure below.
- With this panel for cassette, the directions of the air-intake grille lattices when installing multiple units, and the position of the label showing the company name on the corner panel, can be changed according to customer's requests, as shown in the figure below. However, the wireless signal receiver can only be installed at the refrigerant-tubing corner of the ceiling unit.

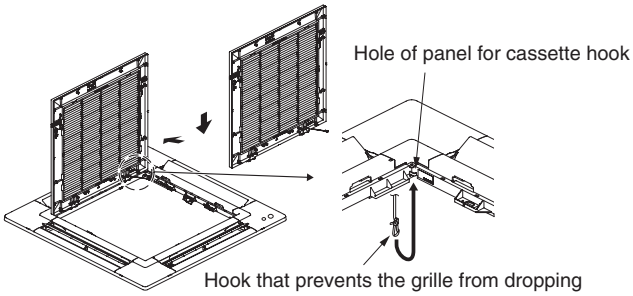

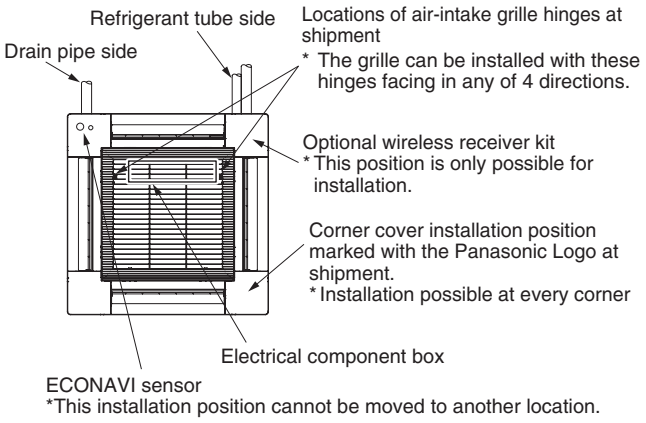

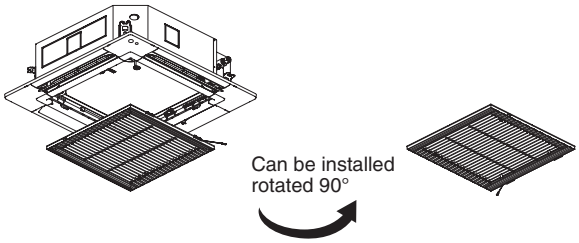

Others

(1) Checking After Installation

1) Check that there are no gaps between the unit and the panel for cassette, or between the panel for cassette and the ceiling surface.
   * Gaps may cause water leakage and condensation.

2) Check that the wiring is securely connected.
   * If it is not securely connected, the auto flap will not operate.
   (“P09” is displayed on the remote controller.)
   In addition, the water leakage and condensation may occur.

(2) Operating the Wireless Remote Controller
For details of installation, refer to the section “Wireless Signal Receiver” in the supplied installation instructions.

(3) Selecting DC Fan Motor Tap (4-Way Cassette)
Check the optional parts accordingly in the following table.

Table for DC Fan Motor Tap Settings

Setting No.	Remote controller setting data Item code 5d	Contents & optional parts name
(1)	0001	Air-flow blocking kit (for 3-way air flow)*2
		Air-flow blocking kit (when a duct is connected.)
		High-ceiling setting 1*2
(3)	0003	High-ceiling setting 2*2
(6)	0006	Air-flow blocking kit (for 2-way air flow)*2

*1 When using optional parts in different setting No. in combination with multiple units, conform it to the larger setting No.

*2 Ceiling height (m)

Indoor unit type	50	60,71	100,125, 140
Standard (factory setting)	2.7	3.0	3.6
High-ceiling setting 1	3.2	3.3	4.3
High-ceiling setting 2	3.5	3.6	5.0
Air-flow blocking kit (for 3-way air flow)	3.8	3.8	4.7
Air-flow blocking kit (for 2-way air flow)	4.2	4.2	5.0

1) When setting on the P.C. Board
<Procedure>
Stop the system before performing these steps.
① Open the electrical component box cover, then check the indoor unit control PCB.
② Change the DIP switch on the indoor unit control PCB in accordance with the setting number which was confirmed in Table for DC Fan Motor Tap Settings.

Setting No.	DIP switch	Setting No.	DIP switch
(1)	TP6 TP3 TP1 ON 1 2 3	(6)	TP6 TP3 TP1 ON 1 2 3
(3)	TP6 TP3 TP1 ON 1 2 3		

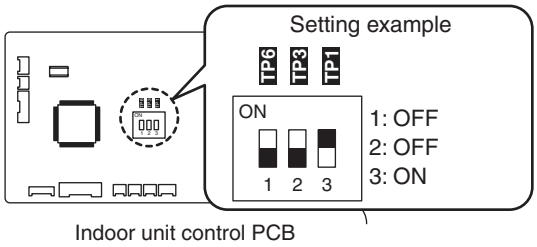

<Procedure of CZ-RTC5A, CZ-RTC5B>
Stop the system before performing these steps.

① Keep pressing the [↩], [↵] and [▶] buttons simultaneously for 4 or more seconds.
The “Maintenance func” screen appears on the LCD display.

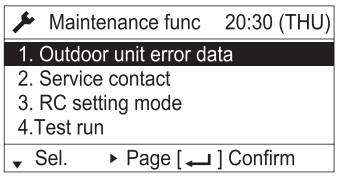

② Press the [▼] or [▲] button to see each menu.
If you wish to see the next screen instantly, press the [◀] or [▶] button.
Select “8. Detailed settings” on the LCD display and press the [↵] button.

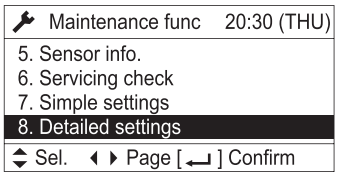

The “Detailed settings” screen appears on the LCD display.

③ Select the “Unit no.” by pressing the ▼ or ▲ button for changes.

Detailed settings		20:30 (THU)
Unit no.	Code no.	Set data
1-1	10	0001
⇕ Sel.	▸ Next	

④ Select the “Code no.” by pressing the ◀ or ▶ button.
Change the “Code no.” to “5D” by pressing the ▼ or ▲ button (or keeping it pressed).

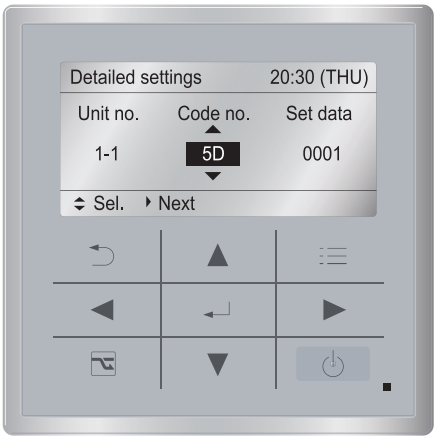

⑤ Select the “Set data” by pressing the ◀ or ▶ button.
Select one of the “Set data” in “Table for DC Fan Motor Tap Settings” by pressing the ▼ or ▲ button.
Then press the ↵ button.

Detailed settings		20:30 (THU)
Unit no.	Code no.	Set data
1-1	5D	0003
⇕ Sel.	[↵] Confirm	

⑥ Press the ↩ button.
The “Exit detailed settings and restart?” (Detailed setting-end) screen appears on the LCD display.
Select “YES” and press the ↵ button.

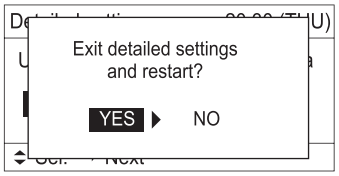

If you wish to change the selected indoor unit, follow the step ②.

<Procedure of CZ-RTC4>
Stop the system before performing these steps.

① Press and hold the ⏻, SET and CANCEL buttons simultaneously for 4 seconds or longer.
② If group control is in effect, press the UNIT button to set.
At this time, the fan at the indoor unit begins and select the address (unit No.) of the indoor unit operating.
③ Designate the item code 5d by adjusting the Temperature Setting ▽/△ buttons.
④ Press the timer time DAY/▼/▲TIMER buttons to select the desired setting data.
*For item codes and setting data, refer to “Table for DC Fan Motor Tap Settings”.
⑤ Press the SET button.
(The display stops blinking and remains lit, and setting is completed.)
If you wish to change the selected indoor unit, follow the step ②.
⑥ Press the ⏻ button to return to normal remote controller display.

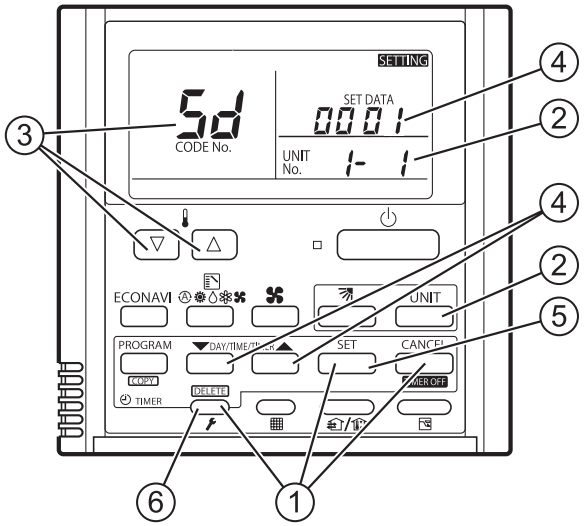

(4) Setting the Flap Separately
1) The 4-air outlet flap can be adjusted separately during operation. When not adjusted separately, all flaps operate in the same manner.

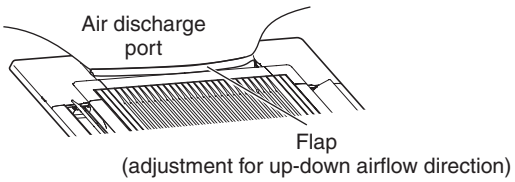

<Procedure of CZ-RTC5A, CZ-RTC5B>
Stop the system before performing these steps.

① Keep pressing the [↩], [↵] and [▶] buttons simultaneously for 4 or more seconds.
The "Maintenance func" screen appears on the LCD display.

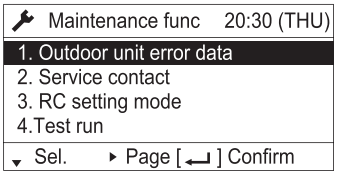

② Press the [▼] or [▲] button to see each menu.
If you wish to see the next screen instantly, press the [◀] or [▶] button.
Select "8. Detailed settings" on the LCD display and press the [↵] button.

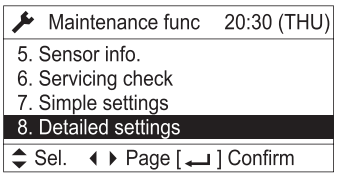

The "Detailed settings" screen appears on the LCD display.

③ Select the "Unit no." by pressing the [▼] or [▲] button for changes.

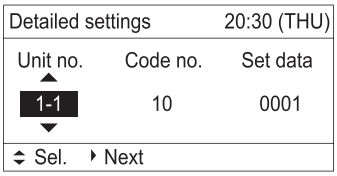

④ Select the "Code no." by pressing the [◀] or [▶] button.
Change the "Code no." to "***XX***" by pressing the [▼] or [▲] button (or keeping it pressed).

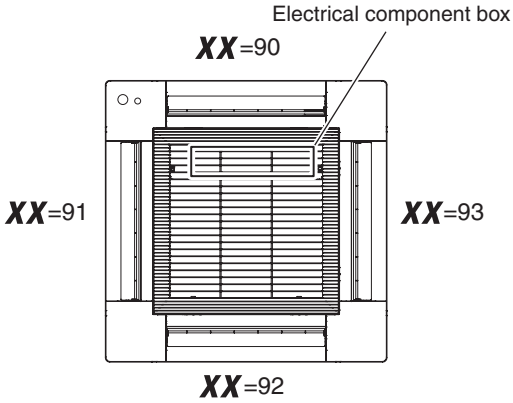

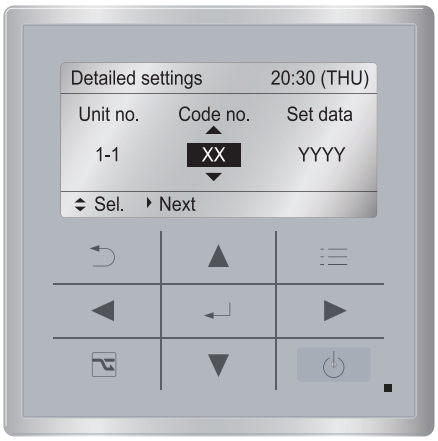

⑤ Select the "Set data" by pressing the [◀] or [▶] button.
Select one of the Setting Data "YYYY" by pressing the [▼] or [▲] button.
Then press the [↵] button.

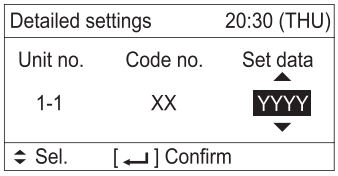

Flap position

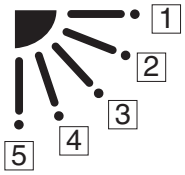

* Setting data "***YYYY***"

Setting data	Flap position during operation
0000	Without separate setting
0001	Swing
0002	Move to position 1 and stay
0003	Move to position 2 and stay
0004	Move to position 3 and stay
0005	Move to position 4 and stay
0006	Move to position 5 and stay

NOTE

The flap swings during the operation under "Setting the Flap Separately".
At this time, the unselected flaps are moved to the position 1.

⑥ Press the [↵] button.
The "Exit detailed settings and restart?" (Detailed setting-end) screen appears on the LCD display.
Select "YES" and press the [↵] button.

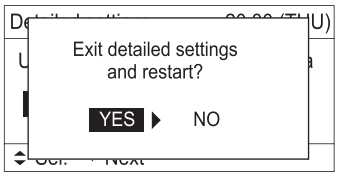

If you wish to change the selected indoor unit, follow the step (2).

<Procedure of CZ-RTC4>

Stop the system before performing these steps.

(1) Press and hold the , SET and CANCEL buttons simultaneously for 4 seconds or longer.

(2) If group control is in effect, press the UNIT button to set. At this time, the fan at the indoor unit begins and select the address (unit No.) of the indoor unit operating.

(3) Designate the item code "***XX***" by adjusting the Temperature Setting ▽/△ buttons.

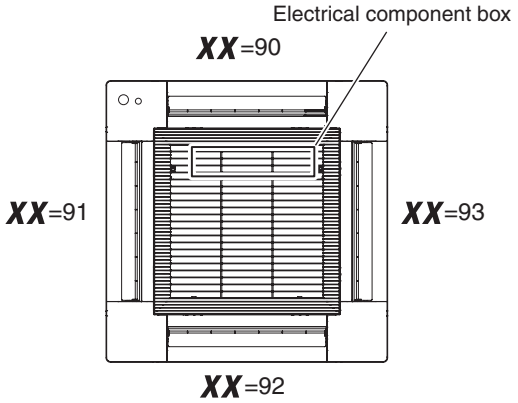

(4) Press the timer time DAY/ /TIMER buttons to select the desired setting data.

Flap position

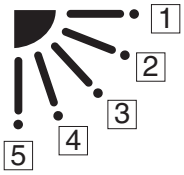

* Setting data "***YYYY***"

Setting data	Flap position during operation
0000	Without separate setting
0001	Swing
0002	Move to position 1 and stay
0003	Move to position 2 and stay
0004	Move to position 3 and stay
0005	Move to position 4 and stay
0006	Move to position 5 and stay

NOTE

The flap swings during the operation under "Setting the Flap Separately".
At this time, the unselected flaps are moved to the position 1.

(5) Press the SET button.
(The display stops blinking and remains lit, and setting is completed.)
If you wish to change the selected indoor unit, follow the step (2).

(6) Press the button to return to normal remote controller display.

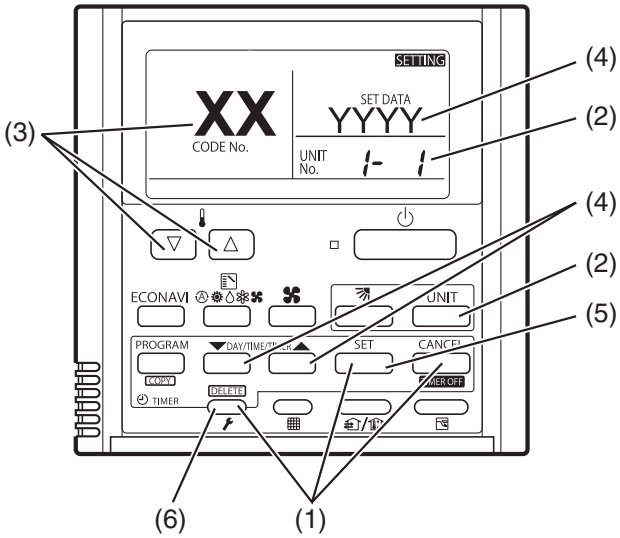

■ ECONAVI SYSTEM SETTING

Change the settings of main and sub indoor units to correspond to the ECONAVI system function.
For the benefit of using the ECONAVI function, the main indoor unit should be provided with the ECONAVI function.

1. Press three buttons.
   Keep pressing the [↩], [↵] and [▶] buttons simultaneously for more than 4 seconds.
   The “Maintenance func” menu appears on the screen.

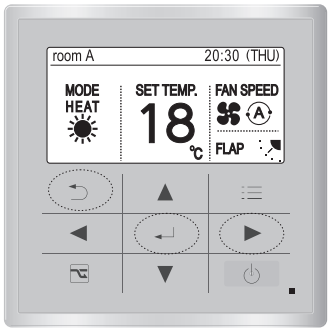

2. Select “0. ECONAVI info.” from the menu command.
   By pressing the [▼] / [▲] buttons, select “0. ECONAVI info.” and press the [↵] button.

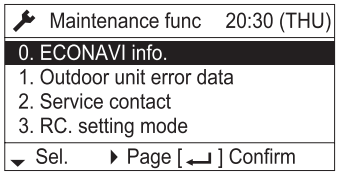

3. Select “System settings” from the menu command.
   By pressing the [▼] / [▲] buttons, select “System settings” and press the [↵] button.

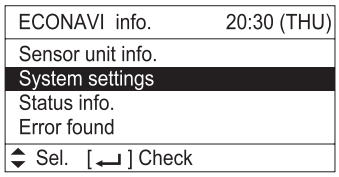

4. Start settings.
   By pressing the [◀] / [▶] buttons, select “YES” and press the [↵] button.

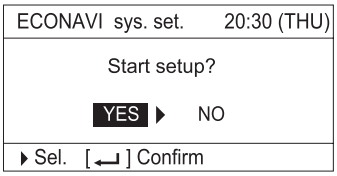

5. When finished settings, the system restarts automatically.
6. Check whether the ECONAVI function is set.
   ECONAVI is displayed on the screen.
   If the display is not operated, press the [⏻] button and set it in operating mode.
   If operation is in fan mode, **ECONAVI** is not displayed. Set in any operating mode other than fan mode.

“ **ECONAVI** ” is displayed when setting the ECONAVI function.

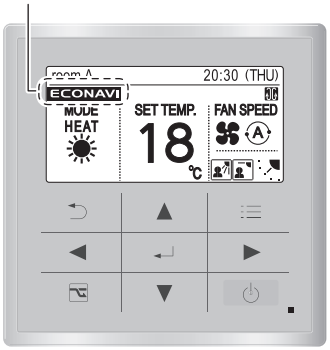

NOTE

- After operating Step 2, the following messages may occasionally appear on the screen.

Display message	Contents
Disabled in default mode.	After a while, select “0. ECONAVI info.” again. If no status changes even after 10 minutes, make auto address setting and then select “0. ECONAVI info.”.

- After operating Step 3, the following messages may occasionally appear on the screen.

Display message	Contents
Setup is not required.	The main indoor unit has already been provided with the ECONAVI function. So, it works right out of the box.
Main indoor unit is not found.	The power of indoor unit may possibly shut down. Check the power supply of indoor unit.
Indoor unit with ECONAVI is not found.	Since all indoor units in the group control are not available for the ECONAVI function, the ECONAVI function cannot be used.

■ ECONAVI TEST OPERATION

Preparation: Refer to the manuals of the indoor unit and turn on the main power switch in advance.
Human detection cannot be made for approx. 90 seconds when switched on the power because the human detection sensor is set in initial setup.

1. Press three buttons.
   Keep pressing the [↩], [↵] and [▶] buttons simultaneously for more than 4 seconds.
   The “Maintenance func” menu appears on the screen.

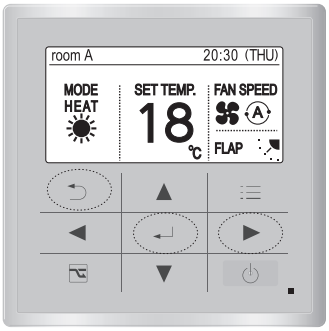

2. Select “0. ECONAVI info.” from the menu command.
   By pressing the [▼] / [▲] buttons, select “0. ECONAVI info.” and press the [↵] button.

Maintenance func 20:30 (THU)
0. ECONAVI info.
1. Outdoor unit error data
2. Service contact
3. RC. setting mode
▼ Sel. ▶ Page [↵] Confirm

3. Select “Error found” from the menu command.
   By pressing the [▼] / [▲] buttons, select “Error found” and press the [↵] button.

ECONAVI info. 20:30 (THU)
Sensor unit info.
System settings
Status info.
Error found
▲ Sel. [↵] Check

4. Check the sensor status shows “Normal”.
   (By pressing the [▼] / [▲] buttons, the status of each indoor unit can be scrolled on the screen.)
   The sensor status of all indoor units are displayed.
   - “Normal”: The sensor on the panel for cassette (ECONAVI type) works normally.
   - “Preparing”: The sensor on the panel for cassette (ECONAVI type) is set in initial setup.
     Confirm that “Normal” appears within 90 seconds.
   - “Unsupported”: Indoor units not available for ECONAVI function.

Error found	20:30 (THU)
Unit no.	Status
1 - 1	Normal
1 - 2	Normal
Sensor 1	Not connected
▲ Scroll	

The test run procedure described above is over. If any display appears other than “Normal” or “Preparing” even though the ECONAVI panel is connected, follow the Step 5 below.

* “1-1”, “1-2” mean indoor unit No. If the indoor unit is without ECONAVI panel, “Not connected” appears.
* “Sensor 1” means optional ECONAVI sensor (CZ-CENSC1). If not connected, “Not connected” appears besides “Sensor 1” on the screen.

5. If the sensor status shows other than “Normal”, “Preparing”,
   If the sensor status shows “Error” or “Not connected” although the panel for cassette (ECONAVI type) is connected, the following symptom may have occurred.
   Specify the applicable indoor unit and check the sensor.
   “Error”: The sensor may possibly be damaged.
   ”Not connected”: The wiring between the indoor unit and sensor may possibly be disconnected.
   * The specified indoor unit can be confirmed by the flap operation.
     Confirmation method:
     ① Finish the maintenance function.
     Press the [☰] button to show the maintenance function display and then press the [↵] button.
     ② Operate the flap.
     By pressing the [☰] button, select the applicable “Indoor Unit No.” in the list of “2. FLAP” and then make flap setting. The indoor unit which responds to the flap setting becomes available.

   When the indoor unit is specified, turn off the main power switch and disconnect the connector of sensor wiring from the PCB. Then reconnect it. Turn on the main power switch and repeat the Steps 1 to 4 described above. Confirm the display shows “Error found”. If the display shows “Error” or “Not connected” on the screen again, it is necessary to replace the panel for cassette (ECONAVI type) with a new one.

■ EXTERNAL DEVICE INTERLOCK

Example of wiring:
This is an example of the combination systems which extract optional output signal by the service wire and relay (field supply).
When actuating the external device interlock, use the thermostat signal.

OPTION Connector (CN060) Output external signals

PAW-OCT: Panasonic has developed an optional accessory (consisting of plug + wires) called PAW-OCT to enable an easy connection to this OPTION Connector (CN060).

With the combination of the T10 and the OPTION Connector (CN060) an external control of the I_U is possible!

6P (WHITE): OUTPUTS EXTERNAL SIGNALS AS SHOWN IN THE FIGURE BELOW.

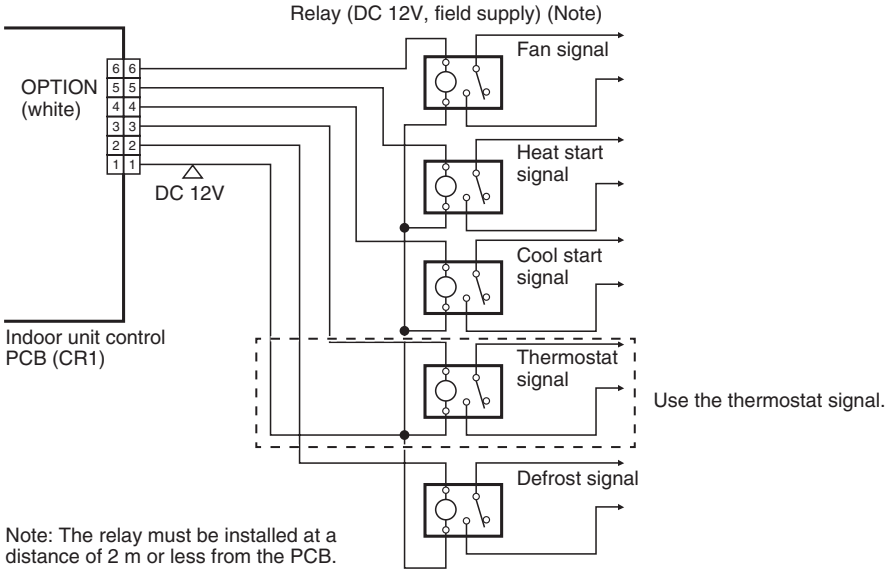

NOTE

- The external output signal from the air conditioner is supplied for the purpose of controlling the external devices. If the air conditioner does not operate, take measures that the movement of external connecting devices can transfer to the safety zone in advance.
- The external output signal from the air conditioner is turned off when the blackout occurs. If any special considerations are needed in case of blackout, provide an external circuit.

■ CHECKLIST AFTER INSTALLATION WORK

Work List	No.	Content	Check ☑	Possibility of Failure & Checkpoint
Installation	1	Are the indoor units installed following the content on page 1-11-2-1 "■ SELECTING THE INSTALLATION SITE (Type U2)"?	☐	There is a possibility of light injure or loss of property.
Tubing & Wiring	2	In the case of multiple installation: Is there a wrong tubing connection with another system?	☐	The unit is inoperated or the refrigerant flows into the inoperative unit and the leakage is expected. Check if there is a wrong tubing or wiring connection with another system.
	3	In the case of multiple installation: Is there a wrong wiring connection with another system?	☐	
	4	Is the earth leakage circuit breaker (all-pole switching function provided) installed?	☐	Power failure or short circuit may cause electric shock or fire. Check installation work and ground wire work.
	5	Is there any wrong installation of optional parts or wrong wiring?	☐	
	6	Was the ground wire work performed?	☐	
	7	Are there any wrong power supply wiring, wrong connection wire, wrong signal wire or loose screw?	☐	
	8	Is the thickness of wire in accordance with rule?	☐	
	9	Is the power-supply voltage equal to the nameplate of the unit?	☐	
	10	Was the check of the airtight test, flared tube fitting and gas leakage on the welded portion performed?	☐	If the gas leakage occurs, the unit quality not only becomes inferior but affects environment. Repair it as quickly as possible.
Drain Check	11	Has the adhesive been applied to the drain connecting portion (resin portion) of the indoor unit?	☐	The resin portion cracks after a few months and it may cause water drain.
	12	Is there water leakage?	☐	Since there is a possibility of water drain, repair the drain pipe if the drain failure or water drain occurs.
	13	Indoor unit drain pipe has a downward gradient (1/100 or more) by rule. Is the drain water flowing smoothly?	☐	
Heat Insulation	14	Was the heat insulation work at a suitable location including the flared tube fitting (refrigerant tube & drain pipe) performed properly?	☐	The quality of unit not only becomes inferior but there is a possibility of the water drain. So, perform the heat insulation work properly.
Optional Parts	15	Was the short-circuit connector connected or the fan tap changed when installing the air-blocking material?	☐	The discharge temperature decreases in cooling mode according to the reduction of air volume and there is a possibility of dew drops. Be sure to change settings.
Test Run	16	Did the abnormal sound occur?	☐	Check if there is a fan contact or distortion of the indoor unit.
	17	Did the cool and warm airflow discharge from the indoor unit?	☐	Check if the unit does not operate or there is a wrong tubing or wiring connection with another system.

■ APPENDIX

Care and Cleaning

WARNING

- **For safety, be sure to turn the air conditioner off and also to disconnect the power before cleaning.**
- **Do not pour water on the indoor unit to clean it. This will damage the internal components and cause an electric shock hazard.**

Air intake and outlet side (Indoor unit)

Clean the air intake and outlet side of the indoor unit with a vacuum cleaner brush, or wipe them with a clean, soft cloth.

If these parts are stained, use a clean cloth moistened with water. When cleaning the air outlet side, be careful not to force the vanes out of place.

CAUTION

- **Never use solvents or harsh chemicals when cleaning the indoor unit. Do not wipe plastic parts using very hot water.**
- **Some metal edges and the fins are sharp and may cause injury if handled improperly; be especially careful when you clean these parts.**
- **The internal coil and other components of outdoor unit must be cleaned regularly. Consult your dealer or service center.**

Air filter

The air filter collects dust and other particles from the air and should be cleaned at regular intervals as indicated in the table below or when the filter indication (▦) on the display of the remote controller (wired type) shows that the filter needs cleaning. If the filter gets blocked, the efficiency of the air conditioner drops greatly.

Type	U2
Period	6 months

- **After Cleaning**
  1. After the air filter is cleaned, reinstall it in its original position.

     Be sure to reinstall in reverse order.
  2. [In the case of Timer Remote Controller]

     Press the Filter reset button.
     The ▦ (Filter) indicator on the display goes out.

     [In the case of High-spec Wired Remote Controller]

     Refer to the Operating Instructions attached to the optional High-spec Wired Remote Controller.

Timer Remote Controller

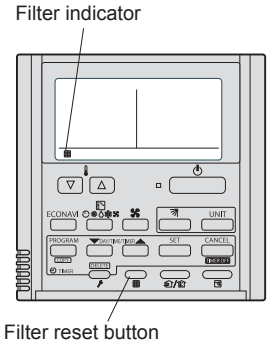

High-spec Wired Remote Controller

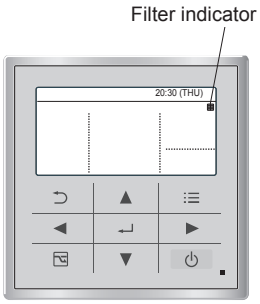

NOTE

The frequency with which the filter should be cleaned depends on the environment in which the unit is used.
Clean the filter frequently for best performance in the area of dusty or oil spots regardless of filter status.

<How to clean the filter>

1. Remove the air filter from the air-intake grille.
2. Use a vacuum cleaner to remove light dust. If there is sticky dust on the filter, wash the filter in lukewarm, soapy water, rinse it in clean water, and dry it.

<How to remove the filter>
4-Way Cassette Type (U2):

1. Use a screwdriver to remove the bolt screw on each side for the two latches. (Be sure to reattach the two bolt screws after cleaning.)
2. Slide the latches of the air-intake grille in the direction of the inside to open the grille.
3. The air-intake grille opens downward.

CAUTION

- **When cleaning the air filter, never remove the safety chain. If it is necessary to remove it for servicing and maintenance inside, be sure to reinstall the safety chain securely (hook on the grille side) after the work.**
- **When the filter has been removed, rotating parts (such as the fan), electrically charged areas, etc. will be exposed in the unit's opening. Bear in mind the dangers that these parts and areas pose, and proceed with the work carefully.**

4. Push the side of the air filter marked with the indication arrow ▽ and pull it toward you. The air filter will be disengaged.

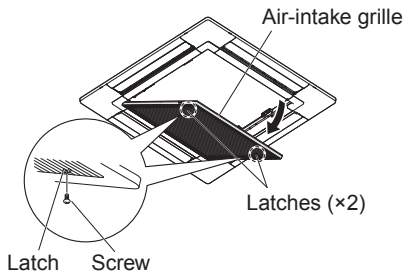

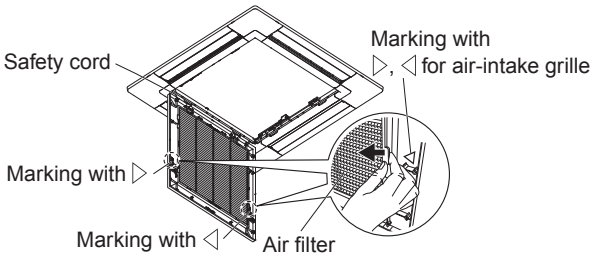

CAUTION

- **Certain metal edges and the condenser fins are sharp and may cause injury if handled improperly; special care should be taken when you clean these parts.**
- **Periodically check the outdoor unit to see if the air outlet or air intake is clogged with dirt or soot.**
- **The internal coil and other components must also be cleaned periodically. Consult your dealer or service center.**

Care: After a prolonged idle period

Check the indoor and outdoor unit air intakes and outlets for blockage; if there is a blockage, remove it.

Care: Before a prolonged idle period

- Operate the fan for half a day to dry out the inside.
- Disconnect the power supply and also turn off the circuit breaker.
- Clean the air filter and replace it in its original position.
- Outdoor unit internal components must be checked and cleaned periodically. Contact your local dealer for this service.

■ Troubleshooting

If your air conditioner does not work properly, first check the following points before requesting service. If it still does not work properly, contact your dealer or a service center.

- **Indoor unit**

Symptom		Cause
Noise	Sound like streaming water during operation or after operation	● Sound of refrigerant liquid flowing inside unit ● Sound of drainage water through drain pipe
	Cracking noise during operation or when operation stops.	Cracking sound due to temperature changes of parts
Odor	Discharged air is smelled during operation.	Indoor odor components, cigarette odor and cosmetic odor accumurated in the air conditioner and its air is discharged. Unit inside is dusty. Consult your dealer.
Dewdrop	Dewdrop gets accumurated near air discharge during operation	Indoor moisture is cooled by cool wind and accumulated by dewdrop.
Fog	Fog occurs during operation in cooling mode. (Places where large amounts of oil mist exist at restaurants.)	● Cleaning is necessary because unit inside (heat exchanger) is dirty. Consult your dealer as technical engineering is required. ● During defrost operation
Fan is rotating for a while even though operation stops.		● Fan rotating makes operation smoothly. ● Fan may sometimes rotates because of drying heat exchanger due to settings.
Wind-direction changes while operating. Wind-direction setting cannot be made. Wind-direction cannot be changed.		● When air discharge temperature is low or during defrost operation, horizontal wind flow is made automatically. ● Flap position is occasionally set up individually.
When wind-direction is changed, flap operates several times and stops at designated position.		When wind-direction is changed, flap operates after searching for standard position.
Dust		Dust accumulation inside indoor unit is discharged.
Poor cooling or heating performance		The indoor unit is initially designed to control the indoor temperature detected by the built-in room sensor inside the indoor unit. Due to indoor unit installation position, however, the built-in sensor may occasionally sense temperature improperly; for example, temperature difference between the ceiling and floor, lighting apparatus, electric fan, windows or waist-high partition walls, etc. In this case, the unit does not operate properly at the desired temperature. You may change the use of the temperature sensor inside the indoor unit to that of the remote controller. Then the desired room temperature can be controlled properly. For details, consult your dealer.

● **Check Before Requiring Services**

Symptom	Cause	Remedy
Air conditioner does not run at all although power is turned on.	Power failure or after power failure	Press ON/OFF operation button on remote controller again.
	Operation button is turned off.	● Switch on power if breaker is turned off. ● If breaker has been tripped, consult your dealer without turning it on.
	Fuse blow out.	If blown out, consult your dealer.
Poor cooling or heating performance	Air intake or air discharge port of indoor and outdoor units is clogged with dust or obstacles.	Remove dust or obstruction.
	Fan speed switch is set to “Low”.*	Change to “Medium” or “High”.*
	Improper temperature settings	Refer to “■ Tips for Energy Saving” on this page.
	Room is exposed to direct sunlight in cooling mode.	
	Doors and /or windows are open.	
	Air filter is clogged.	Refer to “■ Care and Cleaning” on page 1-11-2-29.
	Too much heat sources in room in cooling mode.	Use minimum heat sources and in a short time.
	Too many people in room in cooling mode.	Reduce temperature settings or change to “Medium” or “High”.*

* Fan speed display on the remote controller

High :  (CZ-RTC4),  (CZ-RTC5A, CZ-RTC5B)

Medium :  (CZ-RTC4), 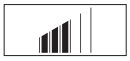 (CZ-RTC5A, CZ-RTC5B)

Low :  (CZ-RTC4), 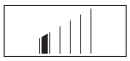 (CZ-RTC5A, CZ-RTC5B)

If your air conditioner still does not work properly although you checked the points as described above, first stop the operation and turn off the power switch. Then contact your dealer and report the serial number and symptom. Never repair your air conditioner by yourself since it is very dangerous for you to do so.

■ Tips for Energy Saving

Avoid

- **Do not block the air intake and outlet of the unit. If either is obstructed, the unit will not work well, and may be damaged.**
- Do not let direct sunlight into the room. Use sunshades, blinds or curtains. If the walls and ceiling of the room are warmed by the sun, it will take longer to cool the room.

Do

- Always try to keep the air filter clean. (Refer to “■ Care and Cleaning”.) A clogged filter will impair the performance of the unit.
- To prevent conditioned air from escaping, keep windows, doors and any other openings closed.

NOTE

Should the power fail while the unit is running

If the power supply for this unit is temporarily cut off, the unit will automatically resume operation once power is restored using the same settings before the power was interrupted.

IMPORTANT INFORMATION REGARDING THE REFRIGERANT USED

NOTE

See "■ Outdoor Unit" under the Section 1-11. Insallation Instructions.

■ SERVICING

CAUTION

- Any qualified person who is involved with working on or breaking into a refrigerant circuit should hold a current valid certificate from an industry-accredited assessment authority, which authorizes their competence to handle refrigerants safely in accordance with an industry recognised assessment specification.
- Servicing shall only be performed as recommended by the equipment manufacturer. Maintenance and repair requiring the assistance of other skilled personnel shall be carried out under the supervision of the person competent in the use of flammable refrigerants.
- Servicing shall be performed only as recommended by the manufacturer.
- Prior to beginning work on systems containing flammable refrigerants, safety checks are necessary to ensure that the risk of ignition is minimised. For repair to the refrigerating system, (2) to (6) shall be completed prior to conducting work on the system.

(1) Work shall be undertaken under a controlled procedure so as to minimise the risk of a flammable gas or vapour being present while the work is being performed.

(2) All maintenance staff and others working in the local area shall be instructed on the nature of work being carried out. Work in confined spaces shall be avoided. The area around the workspace shall be sectioned off. Ensure that the conditions within the area have been made safe by control of flammable material.

(3) The area shall be checked with an appropriate refrigerant detector prior to and during work, to ensure the technician is aware of potentially toxic or flammable atmospheres. Ensure that the leak detection equipment being used is suitable for use with all applicable refrigerants, i.e. non-sparking, adequately sealed or intrinsically safe.

(4) If any hot work is to be conducted on the refrigeration equipment or any associated parts, appropriate fire extinguishing equipment shall be available to hand. Have a dry powder or CO_2 fire extinguisher adjacent to the charging area.

(5) No person carrying out work in relation to a refrigeration system which involves exposing any pipe work shall use any sources of ignition in such a manner that it may lead to the risk of fire or explosion. All possible ignition sources, including cigarette smoking, should be kept sufficiently far away from the site of installation, repairing, removing and disposal, during which refrigerant can possibly be released to the surrounding space. Prior to work taking place, the area around the equipment is to be surveyed to make sure that there are no flammable hazards or ignition risks. "No Smoking" signs shall be displayed.

(6) Ensure that the area is in the open or that it is adequately ventilated before breaking into the system or conducting any hot work. A degree of ventilation shall continue during the period that the work is carried out. The ventilation should safely disperse any released refrigerant and preferably expel it externally into the atmosphere.

(7) Where electrical components are being changed, they shall be fit for the purpose and to the correct specification. At all times the manufacturer's maintenance and service guidelines shall be followed. If in doubt, consult the manufacturer's technical department for assistance.
- The charge size is in accordance with the room size within which the refrigerant containing parts are installed.
- The ventilation machinery and outlets are operating adequately and are not obstructed.
- Marking to the equipment continues to be visible and legible. Markings and signs that are illegible shall be corrected.
- Refrigeration pipe or components are installed in a position where they are unlikely to be exposed to any substance which may corrode refrigerant containing components, unless the components are constructed of materials which are inherently resistant to being corroded or are suitably protected against being so corroded.

(8) Repair and maintenance to electrical components shall include initial safety checks and component inspection procedures. If a fault exists that could compromise safety, then no electrical supply shall be connected to the circuit until it is satisfactorily dealt with. If the fault cannot be corrected immediately but it is necessary to continue operation, an adequate temporary solution shall be used. This shall be reported to the owner of the equipment so all parties are advised.
Initial safety checks shall include:
- That no live electrical components and wiring are exposed while charging, recovering or purging the system.
- That there is continuity of earth bonding.

- During repairs to sealed components, all electrical supplies shall be disconnected from the equipment being worked upon prior to any removal of sealed covers, etc.
- Particular attention shall be paid to the following to ensure that by working on electrical components, the casing is not altered in such a way that the level of protection is affected. This shall include damage to cables, excessive number of connections, terminals not made to original specification, damage to seals, incorrect fitting of glands, etc.
- Ensure that apparatus is mounted securely.
- Ensure that seals or sealing materials have not degraded such that they no longer serve the purpose of preventing the ingress of flammable atmospheres.
- Replacement parts shall be in accordance with the manufacturer's specifications.

NOTE:
The use of silicon sealant may inhibit the effectiveness of some types of leak detection equipment. Intrinsically safe components do not have to be isolated prior to working on them.

- Do not apply any permanent inductive or capacitance loads to the circuit without ensuring that this will not exceed the permissible voltage and current permitted for the equipment in use.
- Intrinsically safe components are the only types that can be worked on while live in the presence of a flammable atmosphere.
- The test apparatus shall be at the correct rating.
- Replace components only with parts specified by the manufacturer. Unspecified parts by manufacturer may result ignition of refrigerant in the atmosphere from a leak.

■ REMOVAL AND EVACUATION

CAUTION

- When breaking into the refrigerant circuit to make repairs – or for any other purpose – conventional procedures shall be used. However, it is important that best practice is followed since flammability is a consideration.
  The following procedure shall be adhered to:
  • Remove refrigerant.
  • Purge the circuit with inert gas.
  • Evacuate.
  • Purge again with inert gas.
  • Open the circuit by cutting or brazing.
- The refrigerant charge shall be recovered into the correct recovery cylinders.
- The system shall be “flushed” with Oxygen free nitrogen (OFN) to render the unit safe.
- This process may need to be repeated several times.
- Compressed air or oxygen shall not be used for this task.
- Flushing shall be achieved by breaking the vacuum in the system with Oxygen free nitrogen (OFN) and continuing to fill until the working pressure is achieved, then venting to atmosphere, and finally pulling down to a vacuum.
- This process shall be repeated until no refrigerant is within the system.
- When the final Oxygen free nitrogen (OFN) charge is used, the system shall be vented down to atmospheric pressure to enable work to take place.
- This operation is absolutely vital if brazing operations on the pipe work are to take place.
- Ensure that the outlet for the vacuum pump is not close to any ignition sources and there is ventilation available.

■ CHARGING PROCEDURES

NOTE

See “■ Outdoor Unit” under the Section 1-11. Installation Instructions.

■ DECOMMISSIONING

CAUTION

- Before carrying out this procedure, it is essential that the technician is completely familiar with the equipment and all its details.
- It is recommended good practice that all refrigerants are recovered safely.
- Prior to the task being carried out, an oil and refrigerant sample shall be taken in case analysis is required prior to re-use of reclaimed refrigerant.
- It is essential that electrical power is available before the task is commenced.
  a) Become familiar with the equipment and its operation.
  b) Isolate system electrically.
  c) Before attempting the procedure ensure that:
     • Mechanical handling equipment is available, if required, for handling refrigerant cylinders.
     • All personal protective equipment is available and being used correctly.
     • The recovery process is supervised at all times by a competent person.
     • Recovery equipment and cylinders conform to the appropriate standards.
  d) Pump down refrigerant system, if possible.
  e) If a vacuum is not possible, make a manifold so that refrigerant can be removed from various parts of the system.
  f) Make sure that cylinder is situated on the scales before recovery takes place.
  g) Start the recovery machine and operate in accordance with manufacturer’s instructions.
  h) Do not overfill cylinders. (No more than 80 % volume liquid charge).
  i) Do not exceed the maximum working pressure of the cylinder, even temporarily.
  j) When the cylinders have been filled correctly and the process completed, make sure that the cylinders and the equipment are removed from site promptly and all isolation valves on the equipment are closed off.
  k) Recovered refrigerant shall not be charged into another refrigeration system unless it has been cleaned and checked.
- Electrostatic charge may accumulate and create a hazardous condition when charging or discharging the refrigerant.
  To avoid fire or explosion, dissipate static electricity during transfer by grounding and bonding containers and equipment before charging / discharging.

■ RECOVERY

NOTE

See “12. Recovery” on page 1-11-1-6.

Option Parts

■ Air Intake Chamber

CZ-FDU3

Installation Instructions

Accessory parts

The accessory parts are required for the installation work so they should not be discarded until the work is completed.

● The following parts are provided inside the package so check that they are accounted for.

Part name	No. of parts	Part name	No. of parts	Part name	No. of parts
Screws (5 x 40) (Used to secure this Air intake chamber)	4	Washers (Used to secure this Air intake chamber)	4	Installation instructions	1

Mounting procedure

Before proceeding with the mounting, remove the cushions which have been inserted into the air outlets (in 4 places).

<1> Mounting Air intake chamber (Fig. 1-11-4)

- Place the black sealant side of Air intake chamber toward the indoor unit.
  (Air intake chamber can be mounted correctly in only one way so ensure that the shapes of the indoor unit and chamber are aligned properly.)
- Use the accessory screws (x4) to secure the indoor unit and Air intake chamber.

<2> Installing the indoor unit

- Install the indoor unit with Air intake chamber mounted on it to the ceiling.
  (Now proceed with the installation in accordance with the installation instructions provided with the indoor unit.)

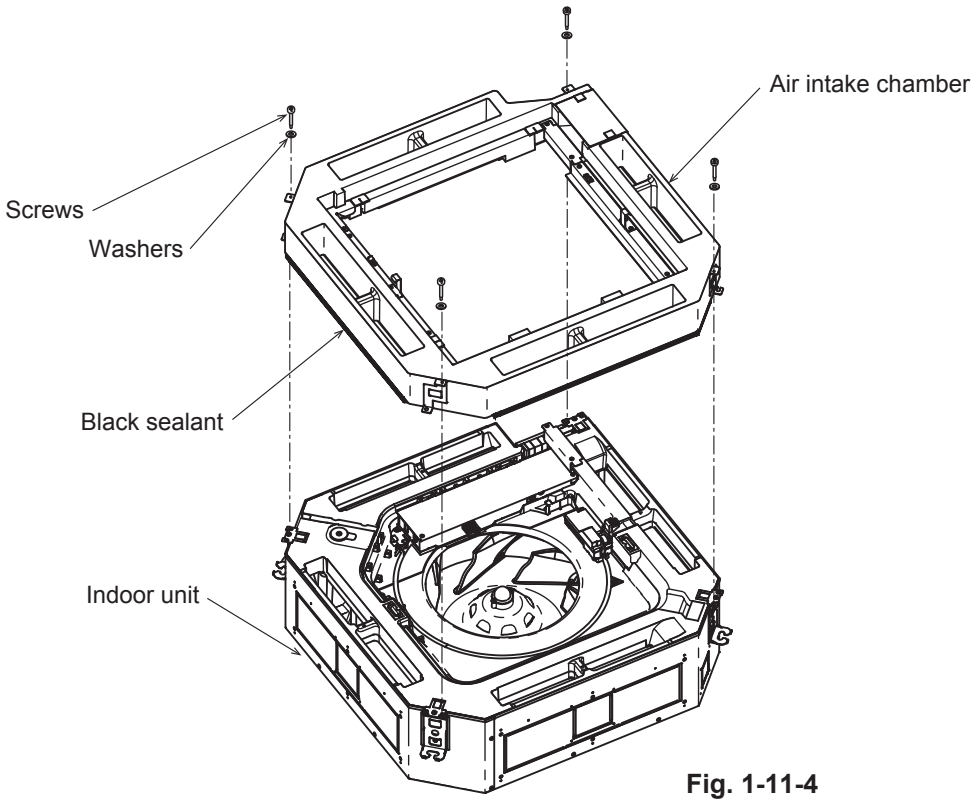

Fig. 1-11-4

<3> Mounting the ceiling panel (Fig. 1-11-5)

- Mount the ceiling panel to the indoor unit (with Air intake chamber).
  (For details on how the ceiling panel is to be mounted, refer to the installation instructions which are provided with the ceiling panel.)

<4> Connecting the panel cables (Fig. 1-11-5)

- Remove the cover of Air intake chamber, and remove the cover of electrical component box.
- Cut the clamp used to bundle the ceiling panel cable, insert the 22P connector (white) of the cable into the through-hole in Air intake chamber, and connect it to the 22P connector inside the electrical component box.
- Return the cover of electrical component box and the cover of Air intake chamber to their original positions.

Mounting procedure (continued)

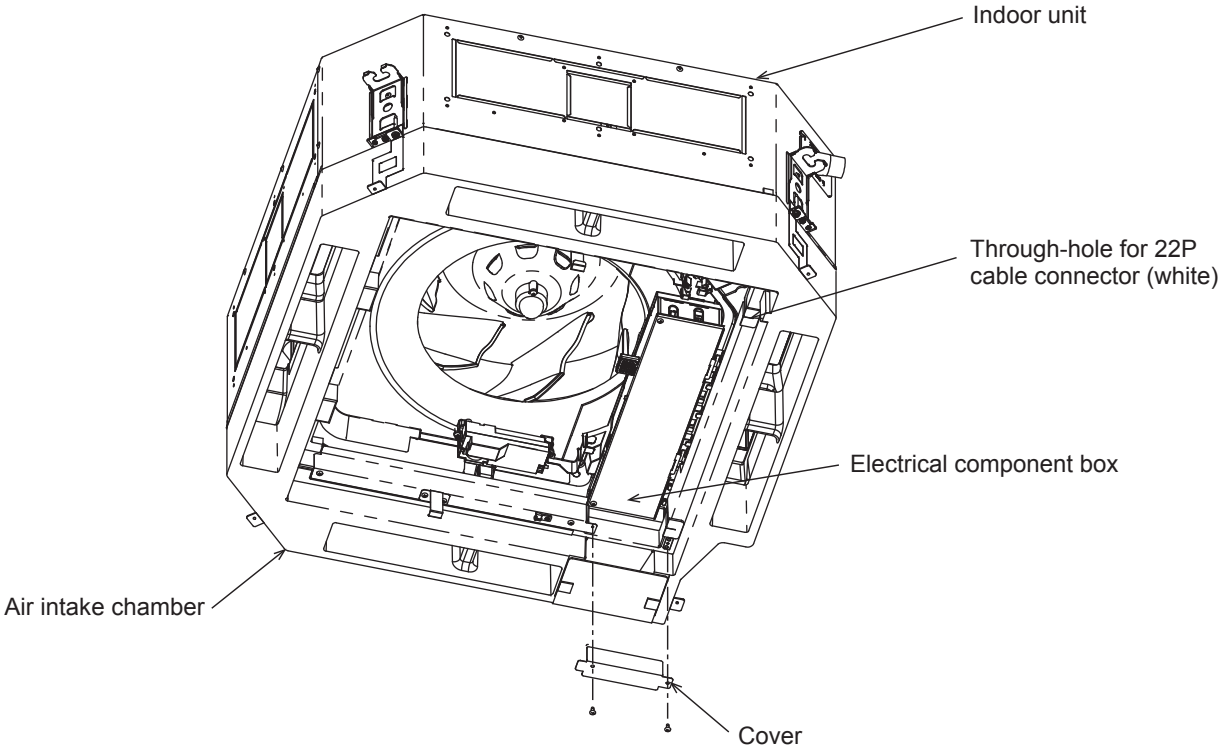

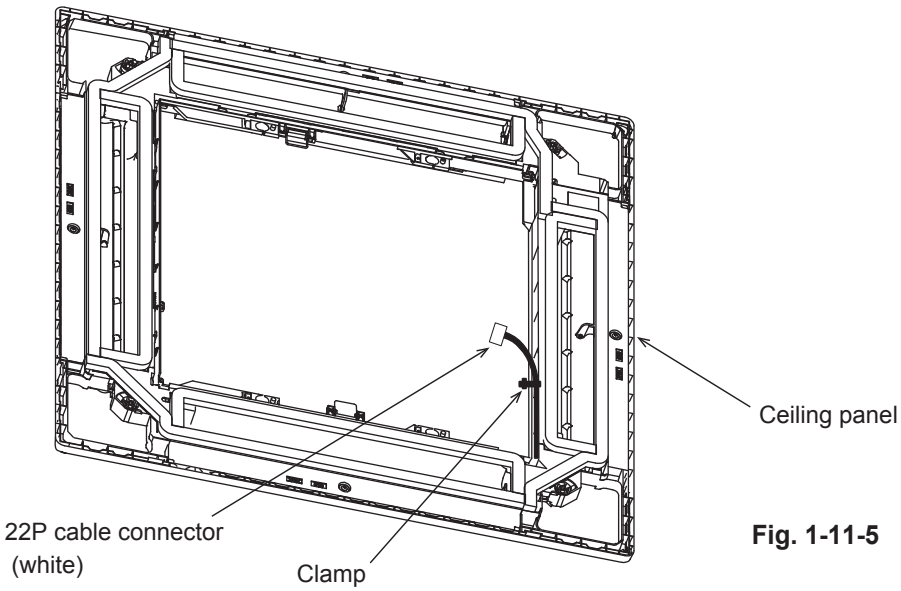

Fig. 1-11-5

Selecting the DC fan motor taps

It is necessary to set the fan speed in accordance with the intended application and the optional parts to be used if any such part is used. (Table 1-11-1)
If this speed is not changed, a reduction in the air flow may result, causing the air outlet temperature to drop and condensation to form during cooling.
There are two ways to set the fan speed: either (1) change the positions of the DIP switches on the indoor unit control PCB or (2) set the speed using the wired remote controller. Select one of these ways.
* Priority is given to setting the fan speed by changing the positions of the DIP switches.

Table 1-11-1 DC fan motor tap setting table

Setting No	Item code 5D/5d setting data	Intended application / name of optional parts	Setting No	Item code 5D/5d setting data	Intended application / name of optional parts
	0000	Standard (factory setting)	(1)	0001	Air-flow blocking kit(for 3-way air flow)
(1)	0001	High-ceiling setting 1 (with standard, ECONAVI panel)	(3)	0003	High-ceiling setting 2 (with standard, ECONAVI panel)
		Air-flow blocking kit (when a duct is connected.)	(6)	0006	Air-flow blocking kit (for 2-way air flow)

(1) When setting the fan speed by changing the positions of the DIP switches on the indoor unit control PCB

<Procedure> Be absolutely sure to turn off the power (earth-leakage circuit breaker).
<1> On Table 1-11-1, check out the "Setting No." that corresponds to the intended application and the optional parts to be used.
<2> Open the cover of the electrical component box, and check the indoor unit control PCB. (Fig. 1-11-6)
<3> Select the Setting No. which was checked out on Table 1-11-1, and change the positions of the DIP switches on the indoor unit control PCB.

Setting No.	DIP switch
(1)	TP6 TP3 TP1 ON 1 2 3 — DIP switch "ON" position / "OFF" position
(3)	TP6 TP3 TP1 ON 1 2 3 — DIP switch "ON" position / "OFF" position
(6)	TP6 TP3 TP1 ON 1 2 3 — DIP switch "ON" position / "OFF" position

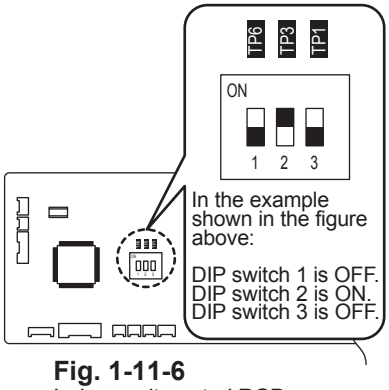

Fig. 1-11-6
Indoor unit control PCB

(2) When setting the fan speed using a wired remote controller (optional parts: CZ-RTC5A, CZ-RTC5B)

On Table 1-11-1, check out the "Item code 5D setting data" that corresponds to the intended application and the optional parts to be used.

<Procedure> Ensure that the unit has stopped operating before changing the fan speed.
<1> Hold down the [↩] + [↵] + [▶] buttons together for at least 4 seconds.
The maintenance function screen is displayed.
<2> Use the [▲] / [▼] buttons to select the display and the [◀] / [▶] buttons to select the page.
Select "8.Detailed settings" and press the [↵] button.
The [Detailed settings screen] appears.
Using the [▲] / [▼] buttons, select the unit No.
<3> Using the [◀] / [▶] buttons, select the item code.
Using the [▲] / [▼] buttons, change the item code to "5D."
<4> Using the [◀] / [▶] buttons, select the setting data.
Using the [▲] [▼] buttons, change the setting data to the value checked out on Table 1-11-1, and press the [↵] button.
<5> After selecting the unit No. using the [◀] / [▶] buttons, press the [↩] button.
The [Detailed settings completion screen] appears.
Select "Yes" , and press the [↵] .

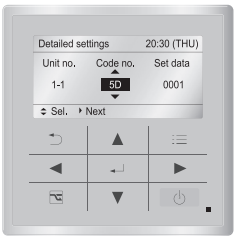

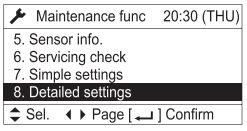

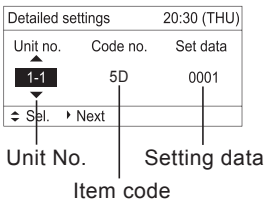

(3) When setting the fan speed using a wired remote controller (optional parts: CZ-RTC4)

On Table 1-11-1, check out the "Item code 5d setting data" that corresponds to the intended application and the optional parts to be used.

<Procedure> Ensure that the units have stopped operating before changing the fan speed.
<1> Hold down the [⚡] + [SET] + [CANCEL] buttons together for at least 4 seconds.
<2> Each time the [UNIT] button is pressed, the numbers of the indoor units under group control are displayed in sequence.
The fan motor of only the indoor unit that has been selected will run.
<3> Specify item code "5d" using the temperature setting [▽] / [△] buttons.
<4> Change the setting data using the hour [DAY/TIME/TIMER▼] [DAY/TIME/TIMER▲] buttons. The setting data details are as given on Table 1-11-1.
<5> Press the [SET] button. (OK if the display changes from flashing to lighted.)
<6> Press the [⚡] button. The normal stop status is established.
Go to step <2> to change the selected indoor unit.
<7> Press the [⚡] button. The normal stop status is established.

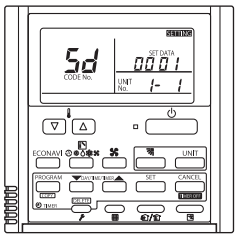

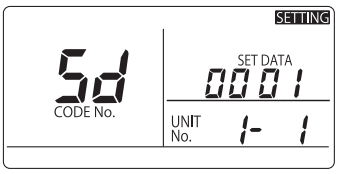

■ **Air-flow Blocking Kit**

CZ-CFU3

Installation Instructions

Accessory parts

The accessory parts are required for the installation work so they should not be discarded until the work is completed.

Part name	No. of parts	Part name	No. of parts	Part name	No. of parts
Air-flow blocker (470×65×T10) A:2 B:1	3	Sealer (570×90×T2)	2	Installation instructions	1

Mounting procedure

(1) Checking where the air-flow blocker is to be attached

For Air outlet<1>

When Air-flow blocker A is to be attached, cut it in parallel with the slit. (Fig. 1-11-7)

For Air outlet<2>

Air-flow blocker B can be used as is.

For Air outlet<3>or<4>

Air-flow blocker A can be used as is.

Fig. 1-11-7

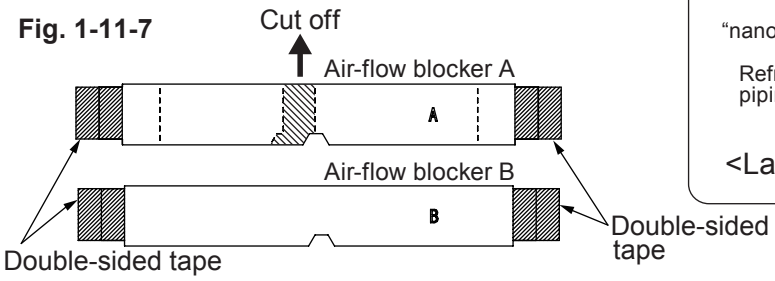

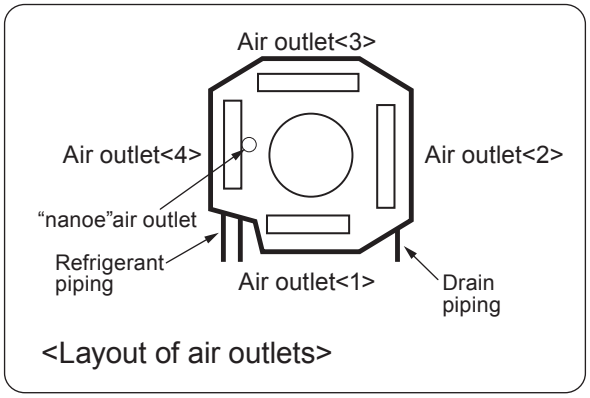

(2) Fit the air-flow blocker into place to match the shape of the air outlet,adhere the tape of the both side of air-flow blocker to the drain pan and adhere the sealer on top to block the passage of air. (Fig. 1-11-8) (Fig. 1-11-9)

Fig. 1-11-8

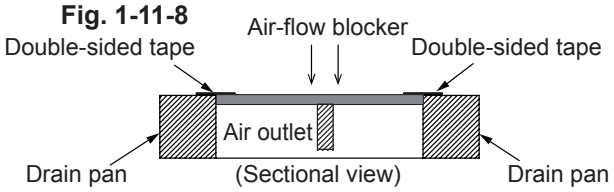

(3) Adhere the sealer to the drain pan with an overlap of 10 mm or more. (Condensation may form if it is adhered with no overlap.) (Fig. 1-11-10)

*1 Ensure that the sealer does not come into contact with the corner metal fitting.

*2 Cut the sealer diagonally so that no contact is made with the wire.

Fold the protruding parts of the sealer over the side panel, and adhere them into place.

Fig. 1-11-9

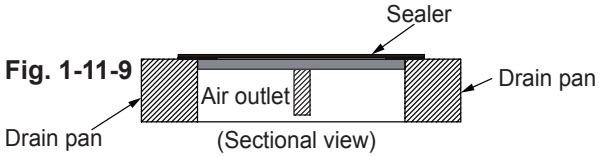

Fig. 1-11-10

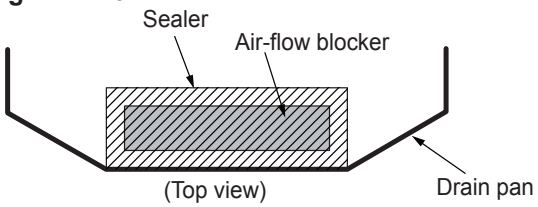

Please affix in accordance with the end of the drain pan.

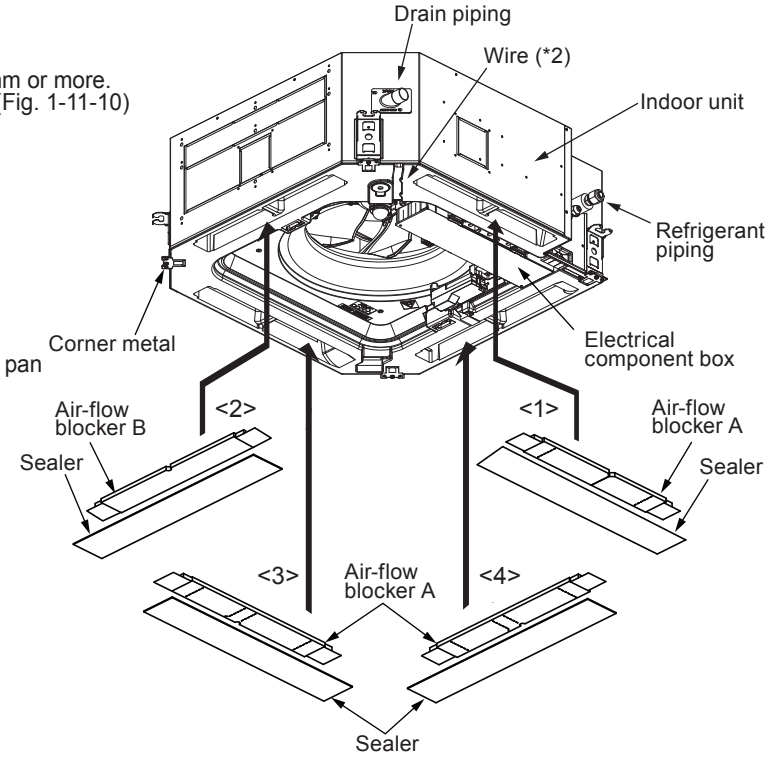

Air outlet blocking patterns

As seen from underneath the indoor unit

- When a 2- or 3-way air outlet configuration is used or when the air outlet duct connection flange (Φ150):field supply is connected, block the air outlets as per the air outlet blocking patterns illustrated below.
  Also, refer to the table below, and decide on where the pipings are to be positioned.
  (To better understand what the illustrations show, refer to the figure on the right.)
  Note: Take care to prevent cold air leaks and deficient insulation while performing the air outlet duct connection flange (Φ150):field supply work in order to prevent condensation from forming.
- It should be borne in mind that any air outlet blocking pattern with the hatching mark will make it impossible for the "nanoe" nano-technology fine particle function to work.
- Under no circumstances must any air outlet blocking patterns not shown in the table below be used.

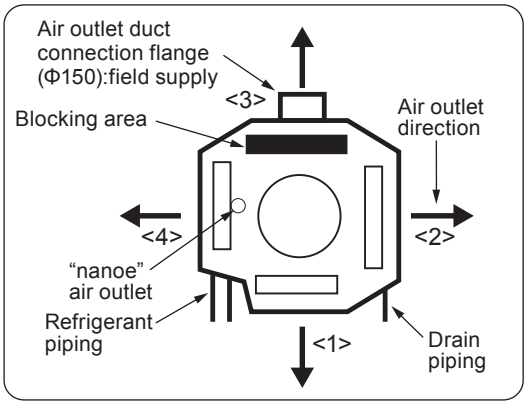

3-way air outlet One outlet can be blocked.				
2-way air outlet Two outlets can be blocked.				
Air outlet duct connection flange (Φ150):field supply connection 3-way air outlet One outlet can be blocked and connected to a duct.				
Air outlet duct connection flange (Φ150):field supply connection 2-way air outlet Two outlets can be blocked and connected to a duct. Note: The duct can be connected only in one of the locations shown.				

■ Changing the DC fan tap settings
While referring to "Selecting the DC fan motor taps," change the DC fan speed by using the wired remote controller or by setting the DIP switches on the indoor unit control PCB.

Selecting the DC fan motor taps

It is necessary to set the fan speed in accordance with the intended application and the optional parts to be used if any such part is used. (Table 1-11-2)
If this speed is not changed, a reduction in the air flow may result, causing the air outlet temperature to drop and condensation to form during cooling.
There are two ways to set the fan speed: either (1) change the positions of the DIP switches on the indoor unit control PCB or (2) set the speed using the wired remote controller. Select one of these ways.
* Priority is given to setting the fan speed by changing the positions of the DIP switches.

Table 1-11-2 DC fan motor tap setting table

Setting No	Item code 5D/5d setting data	Intended application / name of optional parts	Setting No	Item code 5D/5d setting data	Intended application / name of optional parts
	0000	Standard (factory setting)	(1)	0001	Air-flow blocking kit(for 3-way air flow)
(1)	0001	High-ceiling setting 1 (with standard, ECONAVI panel)	(3)	0003	High-ceiling setting 2 (with standard, ECONAVI panel)
		Air-flow blocking kit (when a duct is connected.)	(6)	0006	Air-flow blocking kit (for 2-way air flow)

(1) When setting the fan speed by changing the positions of the DIP switches on the indoor unit control PCB

<Procedure> Be absolutely sure to turn off the power (earth-leakage circuit breaker).
<1> On Table 1-11-2, check out the "Setting No." that corresponds to the intended application and the optional parts to be used.
<2> Open the cover of the electrical parts box, and check the indoor unit control PCB. (Fig. 1-11-11)
<3> Select the Setting No. which was checked out on Table 1-11-2, and change the positions of the DIP switches on the indoor unit control PCB.

Setting No.	DIP switch
(1)	TP6 TP3 TP1 — ON 1 2 3 — DIP switch "ON" position / "OFF" position
(3)	TP6 TP3 TP1 — ON 1 2 3 — DIP switch "ON" position / "OFF" position
(6)	TP6 TP3 TP1 — ON 1 2 3 — DIP switch "ON" position / "OFF" position

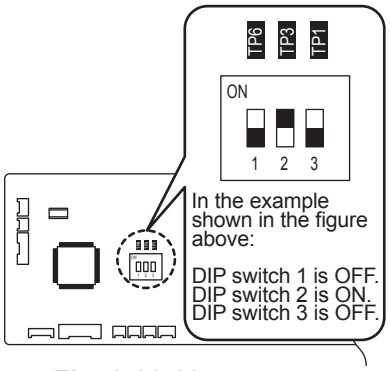

Fig. 1-11-11
Indoor unit control PCB

(2) When setting the fan speed using a wired remote controller (optional parts: CZ-RTC5A, CZ-RTC5B)

On Table 1-11-2, check out the "Item code 5D setting data" that corresponds to the intended application and the optional parts to be used.

<Procedure> Ensure that the unit has stopped operating before changing the fan speed.
<1> Hold down the [↩] + [↵] + [▶] buttons together for at least 4 seconds.
The maintenance function screen is displayed.
<2> Use the [▲] / [▼] buttons to select the display and the [◀] / [▶] buttons to select the page.
Select "8.Detailed settings" and press the [↵] button.
The [Detailed settings screen] appears.
Using the [▲] / [▼] buttons, select the unit No.
<3> Using the [◀] / [▶] buttons, select the item code.
Using the [▲] / [▼] buttons, change the item code to "5D."
<4> Using the [◀] / [▶] buttons, select the setting data.
Using the [▲] [▼] buttons, change the setting data to the value checked out on Table 1-11-2, and press the [↵] button.
<5> After selecting the unit No. using the [◀] / [▶] buttons, press the [↩] button.
The [Detailed settings completion screen] appears.
Select "Yes" , and press the [↵] .

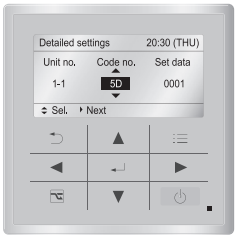

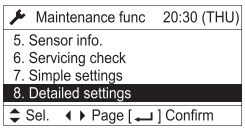

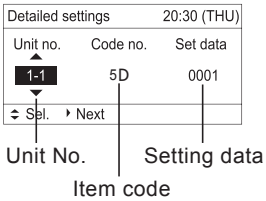

(3) When setting the fan speed using a wired remote controller (optional parts: CZ-RTC4)

On Table 1-11-2, check out the "Item code 5d setting data" that corresponds to the intended application and the optional parts to be used.

<Procedure> Ensure that the units have stopped operating before changing the fan speed.
<1> Hold down the [⏻] + [SET] + [CANCEL] buttons together for at least 4 seconds.
<2> Each time the [UNIT] button is pressed, the numbers of the indoor units under group control are displayed in sequence.
The fan motor of only the indoor unit that has been selected will run.
<3> Specify item code "5d" using the temperature setting [▽] / [△] buttons.
<4> Change the setting data using the hour [▼DAY/TIME/TIMER▲] buttons. The setting data details are as given on Table 1-11-2.
<5> Press the [SET] button. (OK if the display changes from flashing to lighted.)
<6> Press the [⏻] button. The normal stop status is established.
Go to step <2> to change the selected indoor unit.
<7> Press the [⏻] button. The normal stop status is established.

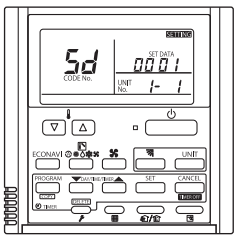

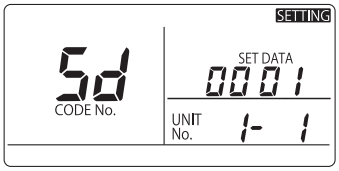

■ **Thermal Insulation Kit**

CZ-INSU3

Installation Instructions

Parts installed on the indoor unit

● Details of parts

Part name	Side panel insulator	Side panel insulator	Side panel insulator	Side panel insulator
Shape	<1> 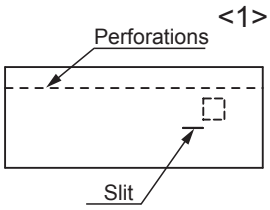	<2> 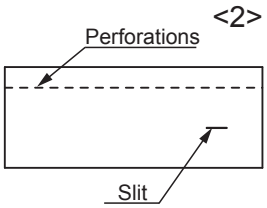	<3> 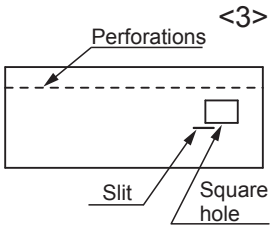	<4> 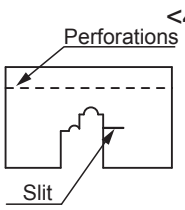
No. of parts	1	1	1	1
Part name	Side panel insulator	Side panel insulator	Ceiling insulator	Ceiling insulator
Shape	<5> 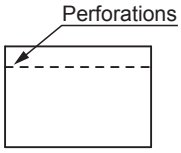	<6> 	<7> 	<8> 
No. of parts	1	1	1	1
Part name	Ceiling insulator	Hanger insulator	Installation instructions	
Shape	<9> 	<10> 	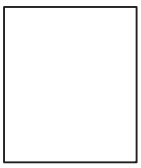	
No. of parts	1	4	1	

● Procedure for attaching the parts

* Indoor unit has two kinds of heights.(Large unit=319mm, Small unit=256mm)
When attaching the side panel insulator to the small unit, attach it after cutting along its perforations of the parts<1> to <5>

1. Align the slits of the side panel insulators <1> to <4> with the hanger, and attach the parts to the side panels of the indoor unit. (Fig. 1-11-12)
2. Now attach the side panel insulator <5> to the side panel of the indoor unit. (Fig. 1-11-12)
3. Align the side panel insulator <6> with the piping cover, and attach the part. (Fig. 1-11-12)
4. Attach the ceiling insulators <7> to <9> in such a way that no gaps are left. (Fig. 1-11-13)

Do the following procedures after installing the indoor unit.

5. Attach the hanger insulators <10> to the hangers in the directions shown in the figure. (Fig. 1-11-14)
   * Keep hanger insulator<10> until installing the indoor unit.

Parts installed on the indoor unit (continued)

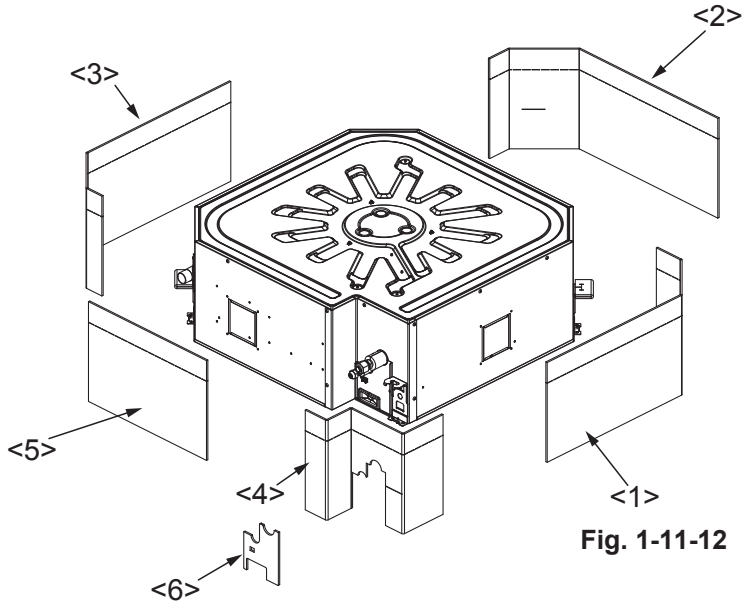

Fig. 1-11-12

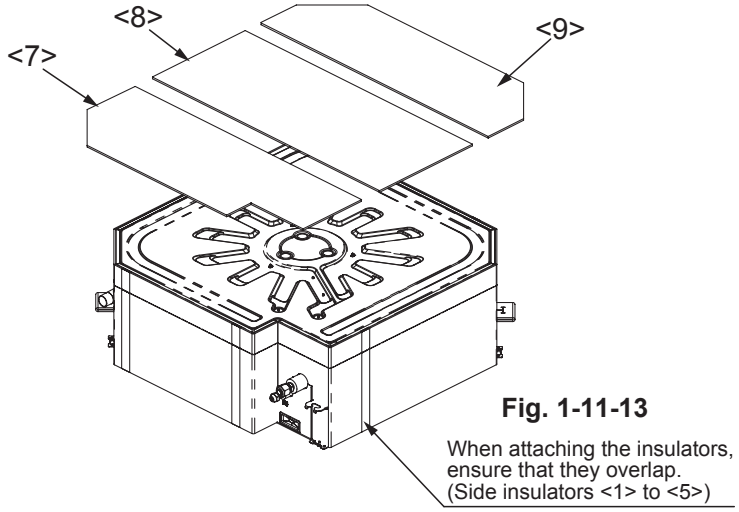

Fig. 1-11-13

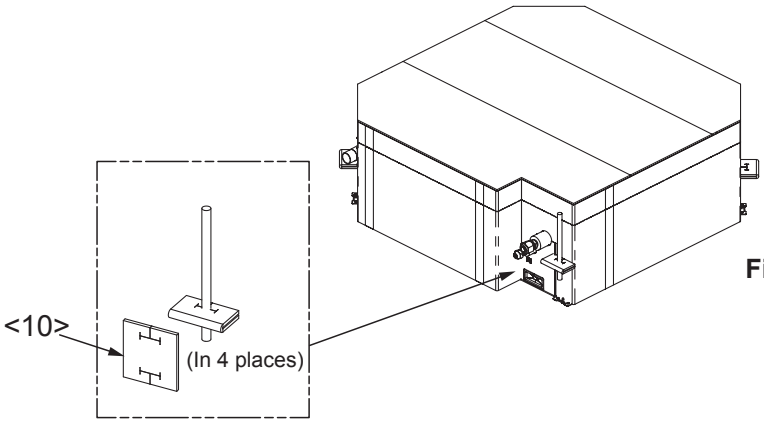

Fig. 1-11-14

Parts mounted on ceiling panels

● Details of parts

Part name	Insulator	Insulator	Insulator	Insulator	Insulator	Insulator
Shape	<11> 1 Slit Slit Perforations (Receiver used for ECONAVI)	<12> 2 Slit Perforations	<13> Slit 3 Slit Perforations (Receiver used for wireless remote controller)	<14>	<15>	<16>
No. of parts	2	1	1	2	1	1

● Procedure for attaching the parts

1. Remove the covers in the four corners. (Fig. 1-11-15)
2. Fit the ceiling panel to the indoor unit.
   (For details on how the ceiling panel is to be fitted, refer to the installation instructions which are provided with the ceiling panel.)
3. Fit the insulators <11> to <13> onto the four corners of the ceiling panel exactly as shown in Fig. 1-11-16.
4. Fit the cover in place. The cover can fall off in this state so be absolutely sure to secure it in place using the fixing screws.

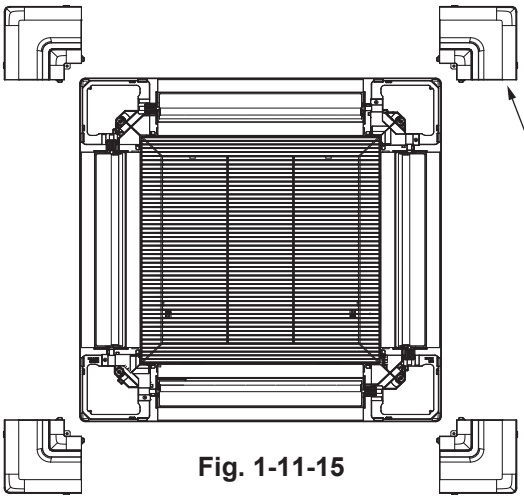

Fig. 1-11-15

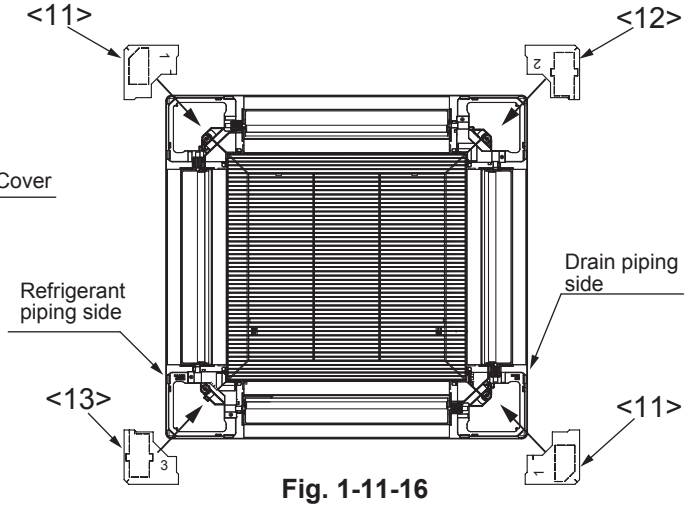

Fig. 1-11-16

<When mounting the parts onto the receivers (Fig. 1-11-17)>

Cut out along the perforations the insulators <11>, <12> and/or <13> that fit the mounting location, mount them by matching them to the shape of each receiver, and attach the covers to the ceiling panel.

* Be absolutely sure to use the maximum dimensions of 910 mm x 910 mm for the extent of the ceiling opening so that the ceiling surface and insulators will not absorb any shocks.
(For details on how the ceiling panel is to be fitted, refer to the installation instructions which are provided with the ceiling panel.)

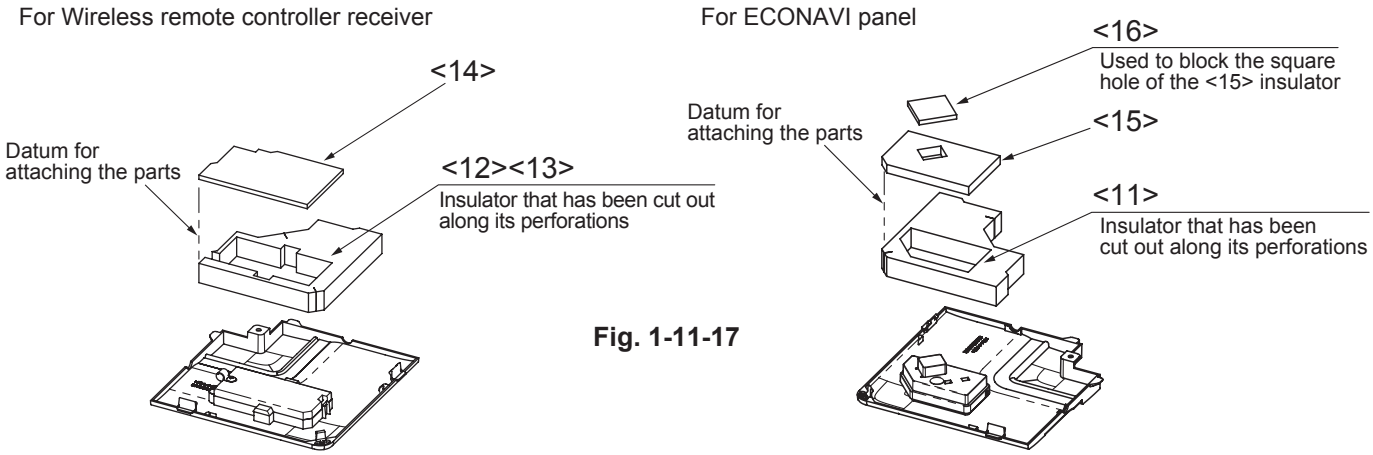

Fig. 1-11-17

■ SELECTING THE INSTALLATION SITE

3. Ceiling Type (T2)

Indoor Unit

AVOID:

- areas where leakage of flammable gas may be expected.
- places where large amounts of oil mist exist.
- direct sunlight.
- locations near heat sources which may affect the performance of the unit.
- locations where external air may enter the room directly. This may cause “condensation” on the air discharge ports, causing them to spray or drip water.
- locations where the remote controller will be splashed with water or affected by dampness or humidity.
- installing the remote controller behind curtains or furniture.
- locations where high-frequency emissions are generated.

DO:

- select an appropriate position from which every corner of the room can be uniformly cooled.
- select a location where the ceiling is strong enough to support the weight of the unit.
- select a location where tubing and drain pipe have the shortest run to the outdoor unit.
- allow room for operation and maintenance as well as unrestricted air flow around the unit.
- the limitation of the tubing length between the indoor and the outdoor units should be referred to the Installation Instructions of the outdoor unit.
- allow room for mounting the remote controller about 1 m off the floor, in an area that is not in direct sunlight or in the flow of cool air from the indoor unit.

Ceiling

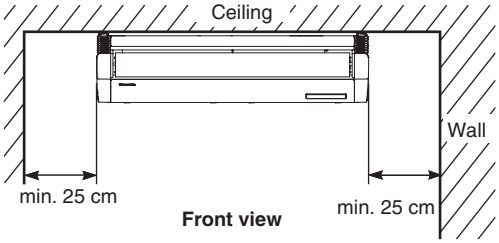

NOTE

The rear of the indoor unit can be installed flush against the wall.

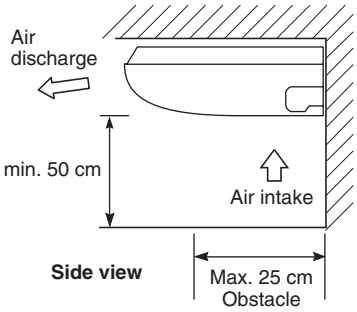

■ HOW TO INSTALL THE INDOOR UNIT

Required Minimum Space for Installation and Service

(1) Dimensions of suspension bolt pitch and unit

Type \ Length	A	B	C
50	911	960	235
60, 71	1226	1275	235
100, 125, 140	1541	1590	235

Unit: mm

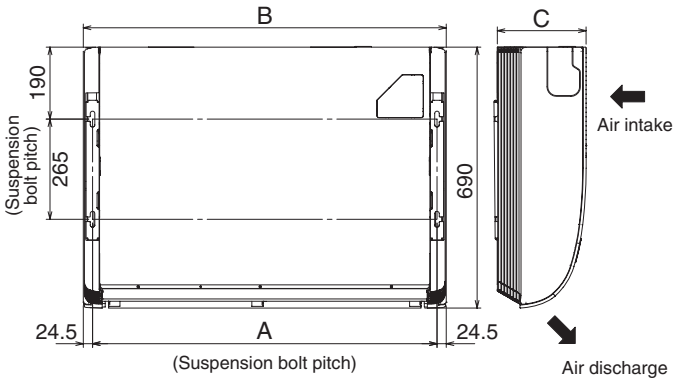

(2) Refrigerant tubing • drain hose position

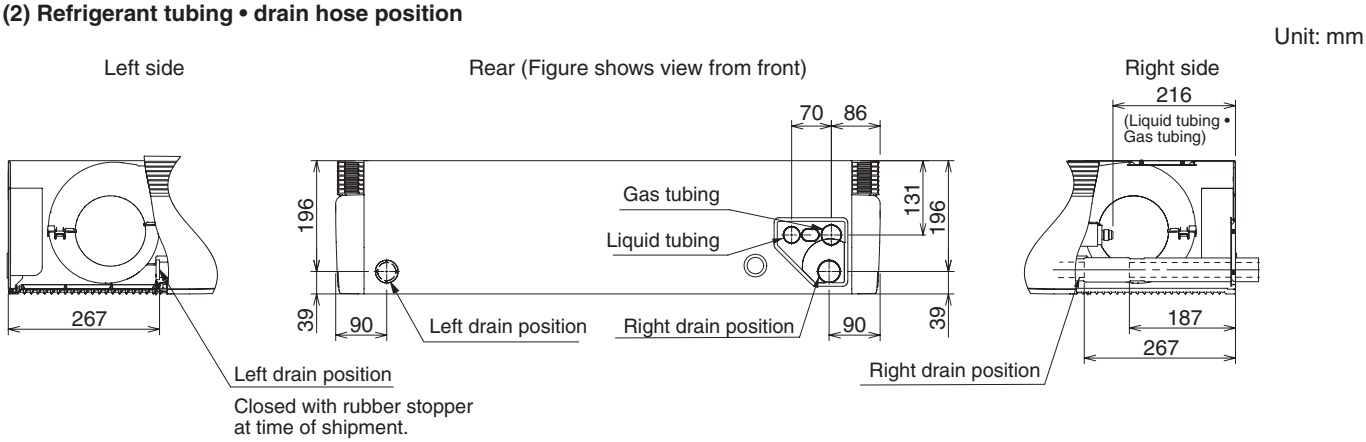

(3) Unit opening position (Refrigerant tubing • drain hose • power inlet port • remote control wiring inlet port)

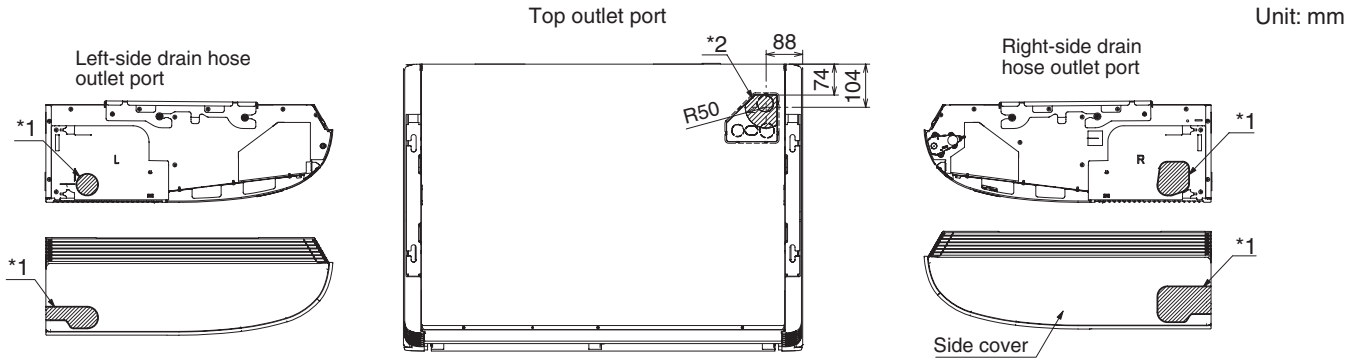

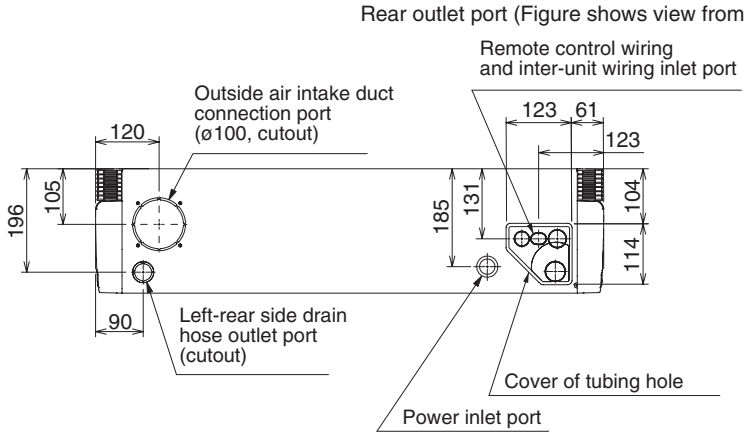

*1 Use a compass saw, jigsaw or similar tool and cut along the indented portion of the side cover and make a hole inside the cover.

*2 When removing the refrigerant tubing from the upper side, cut along the indented portion and pass the tubing through the hole.

NOTE

Be sure to use sealing putty to seal off the opening to prevent dust.

Preparation Before Installation

(1) Remove the bracket (for suspending the indoor unit).

Loose the M8 suspension bolts.
Then remove the bracket.

NOTE

Loosen the M8 suspension bolts and expose the axis of bolts less than 8 mm.

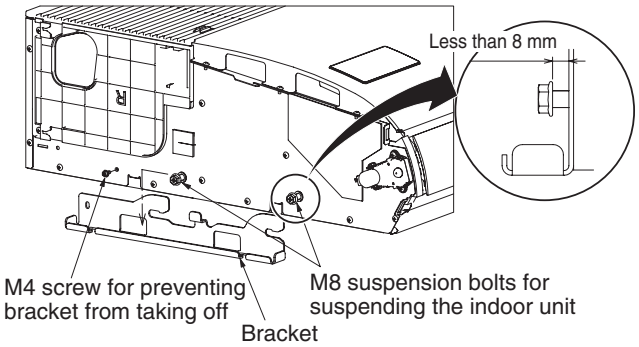

(2) Remove the air-intake grille before suspending the indoor unit. First, remove 2 attachment screws fixed with the latches. Open the air-intake grille and hold the claws of the hinges on both sides. Then remove the air-intake grille and suspension lug located on the left and right side of the indoor unit.

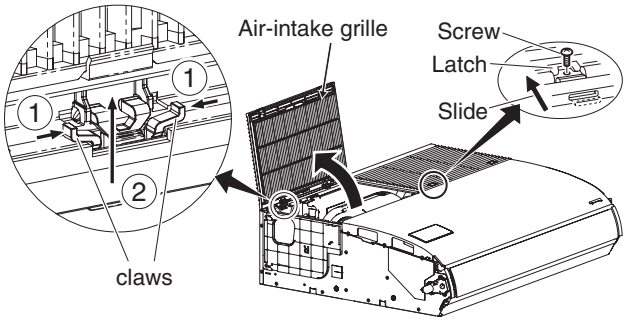

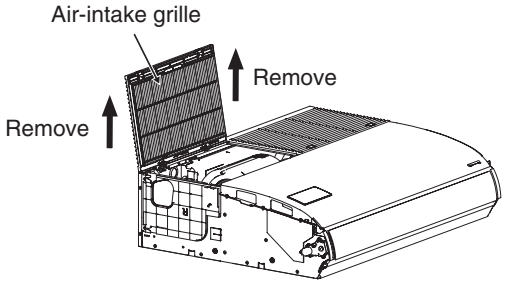

(3) Remove the side plate to the tubing side.

Rear & upper side tubing connection	Remove 2 screws. Slide the side plate in the direction of the arrow and remove it.
Right side tubing connection	Do not remove the side plate.

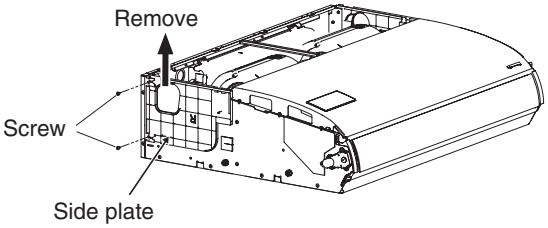

(4) Remove the center bracket.

When wiring, remove the center bracket if necessary.
When wiring is completed, reinstall the center bracket in its original position.

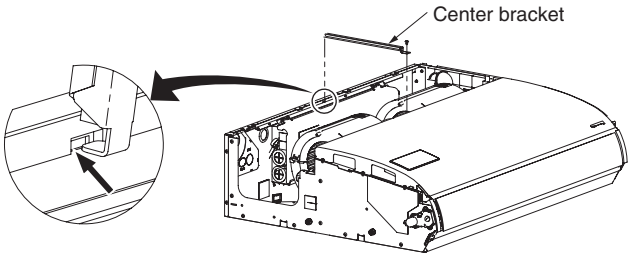

Suspending the Indoor Unit

NOTE

Since the diagram is made of paper, it may shrink or stretch slightly because of high temperature or humidity. For this reason, before drilling the holes maintain the correct dimensions between the markings.

(1) If the full-scale installation diagram is placed on the ceiling, the locations of each suspension bolt can be chosen.
Take a pencil and mark the drill holes.

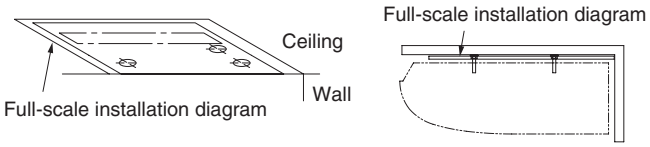

(2) If the full-scale installation diagram is bent at right angle to the ceiling and wall, the locations of the inlet for indoor tubing and wiring are chosen and the locations of each suspension bolt can also be chosen.
Take a pencil and mark the drill holes.

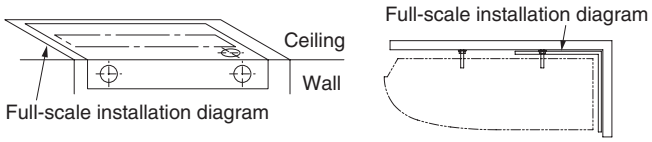

NOTE

The dimension when the indoor unit is placed tightly against the wall.
When installing away from the wall, drainage gradient should be taken into consideration.

(3) Drill holes at the 4 points indicated on the full-scale diagram.

(4) Depending on the ceiling type:

a) Insert suspension bolts.
or

b) Use existing ceiling supports or construct a suitable support.

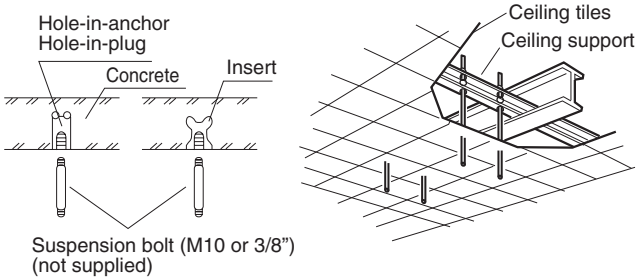

WARNING

It is important that you use extreme care in supporting the indoor unit from the ceiling. Ensure that the ceiling is strong enough to support the weight of the unit. Before hanging the ceiling unit, test the strength of each attached suspension bolt.

(5) Screw in the suspension bolts, allowing them to protrude from the ceiling.
The distance of each exposed bolt must be of equal length within 50 mm.

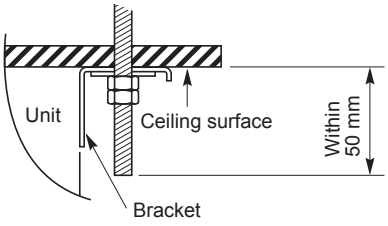

(6) Carry out the preparation for suspending the indoor unit. The suspension method varies depending on whether there is a suspended ceiling or not.

(7) Suspend the indoor unit as follows:

a) Install the bracket to the suspension bolt.
Stick it onto the ceiling surface.

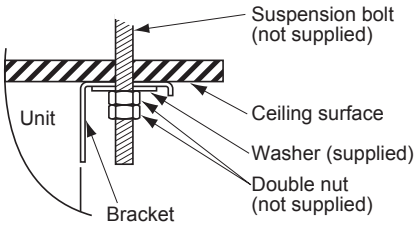

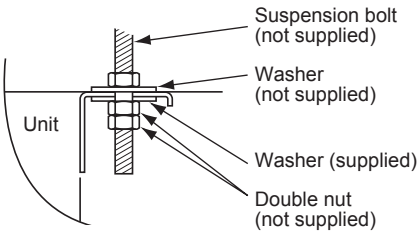

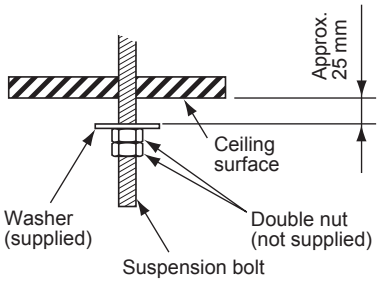

b) Suspend the indoor unit to the bracket.
Tighten the M8 suspension bolts and fix the indoor unit in place.

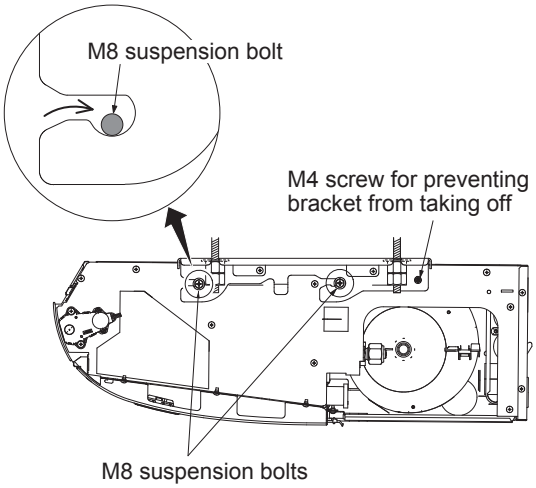

NOTE

The ceiling surface is not always level. Confirm that the indoor unit is evenly suspended. For the installation to be correct, leave a clearance of about 10 mm between the ceiling panel and the ceiling surface and fill the gap with an appropriate insulation or filler material.

Duct for Fresh Air (Field supply)

There is a outside air intake duct connection port (cut out hole) at the left-rear of the indoor unit for drawing in fresh air. If it is necessary to draw in fresh air, remove the cover by opening the hole and connecting the duct to the indoor unit through the connection port. See the figure under the section on page 1-11-3-2 (3).

Shaping the Tubing

- The positions of the refrigerant tubing connections are shown in the figure below. (The tubing can be routed in 3 directions.)

* When routing the tubing out through the top or right sides, cut out the cover of the top panel and cut notches in the side panel. See the figure under the section on page 1-11-3-2 (3).

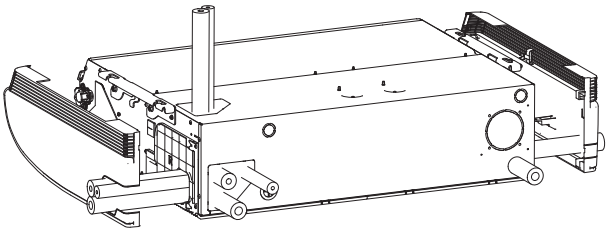

If the tubing is to be routed out together, use a box cutter or similar tool to cut out the part of the cover indicated by the marked area, to match the positions of the tubes. Then draw out the tubing.

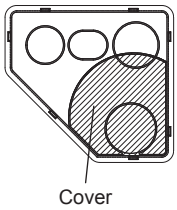

Installing the Drain Pipe

- Prepare hard PVC pipe for the drain and connect it to the indoor unit drain pipe with the supplied hose band to prevent water leaks.
- Measure the thickness of the wall from the inside to the outside and cut PVC pipe at a slight angle to fit. Insert the PVC pipe in the wall.

NOTE

The hole should be made at a slight downward slant to the outside.

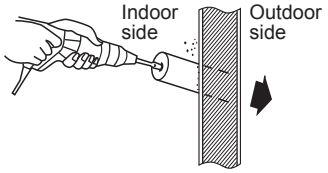

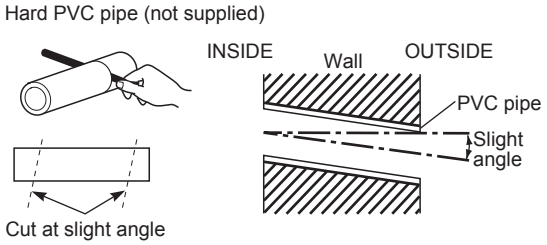

(1) Drain hose connection

- The drain hose is connected below the refrigerant tubing.

(2) Installing the drain hose

- First insert the drain hose (supplied) to the hose band (supplied) and then install the drain hose to the unit drain port.
- Insert until the drain hose bumps to the end.
- Attach the hose band to make the fixed portion 45°upper gradient according to a vinyl tape (not supplied) of the drain hose (supplied).
- Hose band screw torque is 30 - 35N · cm.
- Wind the vinyl tape not to blow up the hose band.
- Connect both the drain hose and PVC pipe (VP20 or similar material, not supplied). Insert until the PVC pipe bumps to the end and adhere with PVC adhesive.

CAUTION

- **Wrap the drain insulator (supplied) between the connection of the drain hose and tubing not to expose the copper tubing. Also, wrap the hose band together. Wrap the hose band with the drain insulator, where the screw is located facing upward. Then, tighten the insulator with a vinyl tape not to cause the detachment. If the tubing parts remain exposed, condensation may occur.**
- **Be sure to use the supplied drain hose.**
- If other commercially available hose bands are used, the drain hose may become pinched or wrinkled and there is danger of water leakage.
  Therefore be sure to use the supplied hose bands.
- Connect the drain pipe so that it slopes downward from the unit to the outside.

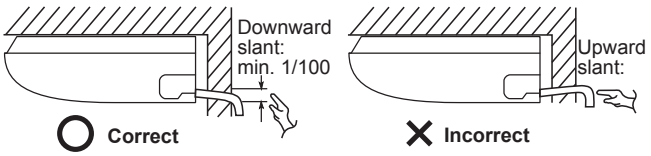

- Never allow water traps to occur in the course of the piping.
- Insulate any piping inside the room to prevent dripping.
- After the drain piping, pour an appropriate amount of water into the drain pan through the opening on the side of the air discharge port. Check the water draining smoothly.

* If the drain hose is routed through the left side, see the figure under the section “Shaping the Tubing” on page 1-11-3-4, and follow the procedure above to install the hose.
Reattach the rubber stopper removed earlier onto the right side.

The rubber stopper can be inserted easily by using a screwdriver or similar tool to press the stopper into the drain port on the main unit. Press the stopper into the main unit drain port as far as it will go.

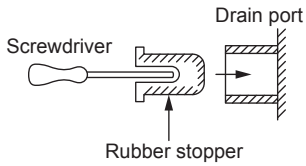

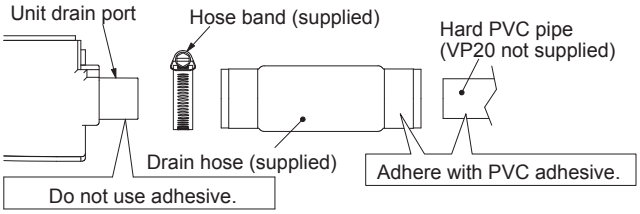

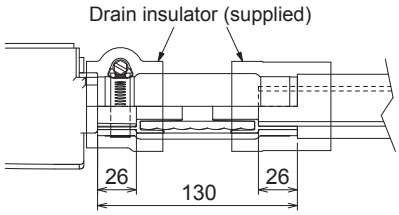

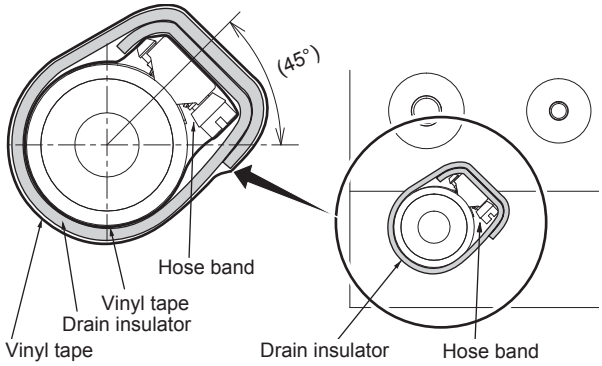

CAUTION

The indoor unit should be slightly tilted downward toward the drain pipe connection side as shown in figure below so that the wastewater can flow smoothly without being trapped in the middle.

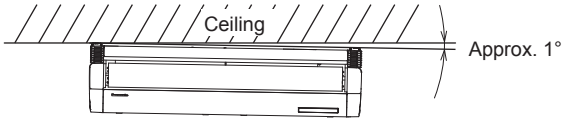

Diagonally right down (front view)
(Ex.: Diagonal-right-backwards)

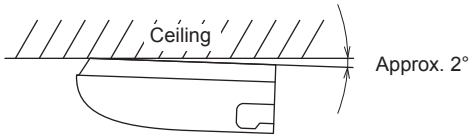

Diagonally backward (side view)

■ HOW TO PROCESS TUBING

Must ensure mechanical connections be accessible for maintenance purposes.

Connecting the Refrigerant Tubing

NOTE

When connecting flare at indoor side, make sure that the flare connection is used only once. If torqued up and released, the flare must be remade. Once the flare connection was torqued up correctly and leak test was made, thoroughly clean and dry the surface to remove oil, dirt and grease by following instructions of silicone sealant. Apply neutral cure & ammonia-free silicone sealant that is non-corrosive to copper & brass to the external of the flared connection to prevent the ingress of moisture on both the gas & liquid sides. (Moisture may cause freezing and premature failure of the connection.)

Use of the Flaring Method

Many of conventional split system air conditioners employ the flaring method to connect refrigerant tubes that run between indoor and outdoor units. In this method, the copper tubes are flared at each end and connected with flare nuts.

Flaring Procedure with a Flare Tool

(1) Cut the copper tube to the required length with a tube cutter. It is recommended to cut approx. 30 – 50 cm longer than the tubing length you estimate.

(2) Remove burrs at each end of the copper tubing with a tube reamer or a similar tool. This process is important and should be done carefully to make a good flare. Be sure to keep any contaminants (moisture, dirt, metal filings, etc.) from entering the tubing.

Deburring

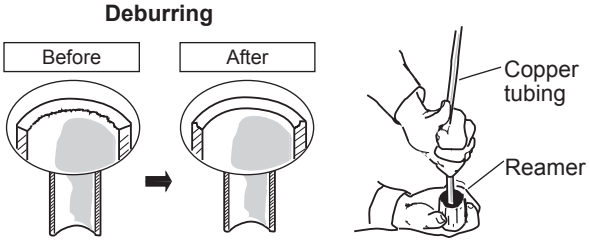

NOTE

When reaming, hold the tube end downward and be sure that no copper scraps fall into the tube.

(3) Remove the flare nut from the unit and be sure to mount it on the copper tube.

(4) Make a flare at the end of the copper tube with a flare tool.

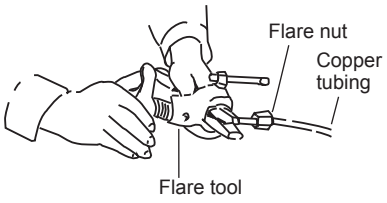

NOTE

When flared joints are reused, the flare part shall be re-fabricated.
A good flare should have the following characteristics:

- inside surface is glossy and smooth
- edge is smooth
- tapered sides are of uniform length

Caution Before Connecting Tubes Tightly

(1) Apply a sealing cap or water-proof tape to prevent dust or water from entering the tubes before they are used.

(2) Be sure to apply refrigerant lubricant (ether oil) to the inside of the flare nut before making piping connections. This is effective for reducing gas leaks.

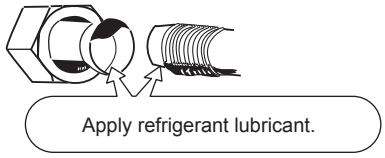

(3) For proper connection, align the union tube and flare tube straight with each other, then screw on the flare nut lightly at first to obtain a smooth match.

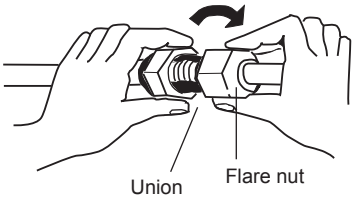

- Adjust the shape of the liquid tube using a tube bender at the installation site and connect it to the liquid tubing side valve using a flare.

Connecting Tubing Between Indoor and Outdoor Units

(1) Tightly connect the indoor-side refrigerant tubing extended from the wall with the outdoor-side tubing.

Indoor Unit Tubing Connection

Indoor unit type	50	60	71	100	125	140
Gas tubing (mm)	ø12.7	ø15.88				
Liquid tubing (mm)	ø6.35	ø9.52				

(2) To fasten the flare nuts, apply specified torque.

- When removing the flare nuts from the tubing connections, or when tightening them after connecting the tubing, be sure to use a torque wrench and a spanner.
  If the flare nuts are over-tightened, the flare may be damaged, which could result in refrigerant leakage and cause injury or asphyxiation to room occupants.

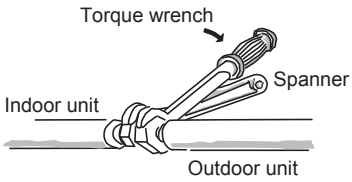

- For the flare nuts at tubing connections, be sure to use the flare nuts that were supplied with the unit, or else flare nuts for R410A, R32 (type 2). The refrigerant tubing that is used must be of the correct wall thickness as shown in the table below.

Tube diameter	Tightening torque (approximate)	Tube thickness
ø6.35 (1/4")	14 – 18 N · m {140 – 180 kgf · cm}	0.8 mm
ø9.52 (3/8")	34 – 42 N · m {340 – 420 kgf · cm}	0.8 mm
ø12.7 (1/2")	49 – 55 N · m {490 – 550 kgf · cm}	0.8 mm
ø15.88 (5/8")	68 – 82 N · m {680 – 820 kgf · cm}	1.0 mm

  Because the pressure is approximately 1.6 times higher than conventional refrigerant R22 pressure, the use of ordinary flare nuts (type 1) or thin-walled tubes may result in tube rupture, injury, or asphyxiation caused by refrigerant leakage.
- In order to prevent damage to the flare caused by over-tightening of the flare nuts, use the table above as a guide when tightening.
- When tightening the flare nut on the liquid tube, use an adjustable wrench with a nominal handle length of 200 mm.

Insulating the Refrigerant Tubing

Tubing Insulation

Must ensure that pipe-work shall be protected from physical damage.

- Thermal insulation must be applied to all units tubing, including distribution joint (field supply).
  * For gas tubing, the insulation material must be heat resistant to 120°C or above. For other tubing, it must be heat resistant to 80°C or above.

  Insulation material thickness must be 10 mm or greater.
  If the conditions inside the ceiling exceed DB 30°C and RH 70%, increase the thickness of the gas tubing insulation material by 1 step.

Insulation of the flare nuts

Attach the flare insulator (supplied) just like wrapping around the flare nut (supplied). Match the both slits of flare insulators for gas and liquid tubes facing upward. Tightly attach the end of the flare insulators to the tube cradle without any space. Then clamp the flare insulator with the clampers about 20 mm away from both ends.

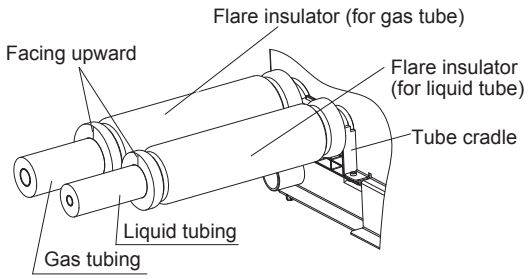

Ensure to do the re-flaring of pipes before connecting to units to avoid leaking.

To prevent the ingress of moisture into the joint which could have the potential to freeze and then cause leakage, the joint must be sealed with suitable silicone and insulation material.
The joint should be sealed on both liquid and gas side.

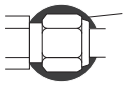

Silicone Sealant must be neutral cure and ammonia free. Use of silicon containing ammonia can lead to stress corrosion on the joint and cause leakage.

Taping the flare nuts

Wind the white insulating tape around the flare nuts at the gas tube connections. Then cover up the tubing connections with the flare insulator, and fill the gap at the union with the supplied black insulating tape. Finally, fasten the insulator at both ends with the supplied vinyl clamps.

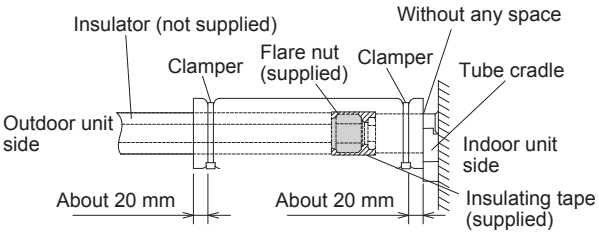

NOTE

Tighten the clampers to prevent any condensation that may occur as the copper tubing is exposed.

Insulation material

The material used for insulation must have good insulation characteristics, be easy to use, be age resistant, and must not easily absorb moisture.

CAUTION

After a tube has been insulated, never try to bend it into a narrow curve because it can cause the tube to break or crack.
Never grasp the drain or refrigerant connecting outlets when moving the unit.

Taping the Tubes

(1) At this time, the refrigerant tubes (and electrical wiring if local codes permit) should be taped together with armoring tape in 1 bundle. To prevent condensation from overflowing the drain pan, keep the drain hose separate from the refrigerant tubing.

(2) Wrap the armoring tape from the bottom of the outdoor unit to the top of the tubing where it enters the wall. As you wrap the tubing, overlap half of each previous tape turn.

(3) Clamp the tubing bundle to the wall, using 1 clamp approx. each meter.

Two tubes arranged together

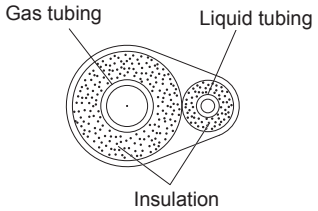

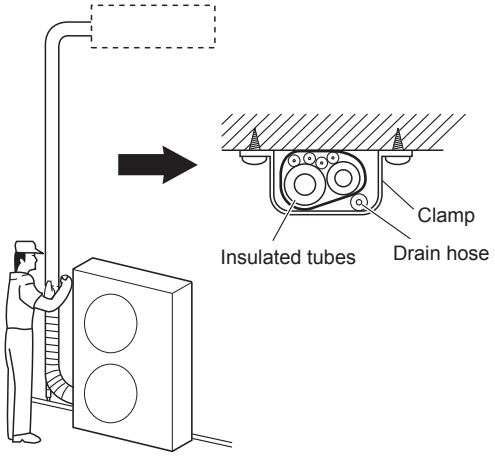

NOTE

Do not wind the armoring tape too tightly since this will decrease the heat insulation effect. Also ensure that the condensation drain hose splits away from the bundle and drips clear of the unit and the tubing.

Finishing the Installation

After finishing insulating and taping over the tubing, use sealing putty to seal off the hole in the wall to prevent rain and draft from entering.

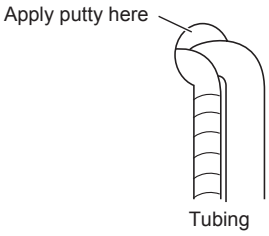

FINAL PROCEDURE

Reinstall the removed part to be placed in its original position.

(See the section “Preparation Before Installation” on page 1-11-3-3.)

Then install the supplied side covers (L/R) on both sides of the indoor unit.

- Attach the supplied side plates.

  Insert the side plates in the direction of the arrow and fix them with 2 screws once you’ve removed.

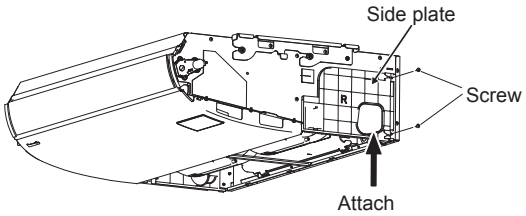

- Attach the supplied side covers.

  Slide the covers from the front side and attach to the claws of the latches.
  Tighten the screws (supplied).

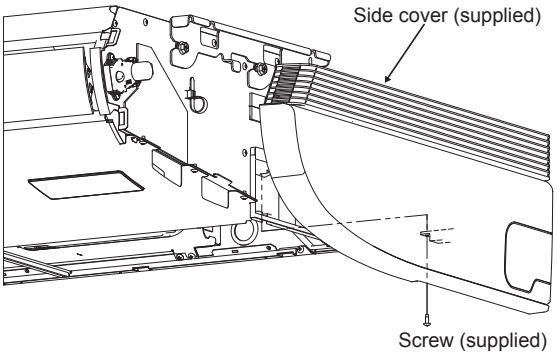

- Attach the air-intake grille.
  When attaching the air-intake grille, perform the reverse procedure to removing the grille.
  Refer to the section “Preparation Before Installation” on page 1-11-3-3 . Be sure to attach the safety string.

  Close the air-intake grille and fix the claws of the latches with the screws.

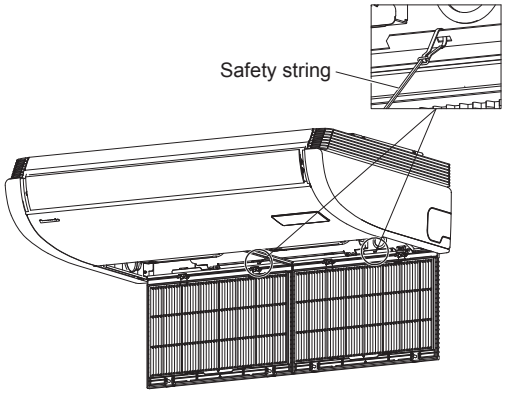

■ HOW TO INSTALL THE TIMER REMOTE CONTROLLER OR HIGH-SPEC WIRED REMOTE CONTROLLER (OPTIONAL PART)

NOTE

See “Section 2. TEST RUN”.

■ HOW TO INSTALL WIRELESS REMOTE CONTROLLER

NOTE

See “Section 8. HOW TO INSTALL THE WIRELESS REMOTE CONTROLLER RECEIVER”.

Accessories Supplied with Unit

The accessory parts are supplied inside the indoor unit.

Open the air-intake grille of the indoor unit and take out a package of accessories.

See the section “Preparation Before Installation” on page 1-11-3-3.

Table 1-11-4 (Ceiling)

Part Name	Figure	Q’ty	Remarks
Special washer		4	For temporarily suspending indoor unit from ceiling
Drain insulator		2	For drain hose joint
Flare insulator		1	For gas tube joint
		1	For liquid tube joints
Clamper		6	For flare insulator and wiring
Full-scale installation diagram		1	For positioning installation
Drain hose		1	For main unit + PVC pipe joints
Insulating tape		2	For gas and liquid tubes flare nuts
Hose band		1	For drain hose connection
Side cover (R)		1	(Packed in carton box) For right side
Side cover (L)		1	(Packed in carton box) For left side
Screw		2	For side cover (L/R)
Operating Instructions		1	
Installation Instructions		1	

Type of Copper Tube and Insulation Material

If you wish to purchase these materials separately from a local source, you will need:

1. Deoxidized annealed copper tube for refrigerant tubing.
2. Foamed polyethylene insulation for copper tubes as required to precise length of tubing. Wall thickness of the insulation should be not less than 8 mm.
3. Use insulated copper wire for field wiring.
   Wire size varies with the total length of wiring.
   See the section “1-10. Electrical Wiring” for details.

CAUTION

Check local electrical codes and regulations before obtaining wire.
Also, check any specified instructions or limitations.

Additional Materials Required for Installation

1. Refrigeration (armored) tape
2. Insulated staples or clamps for connecting wire (See your local codes.)
3. Putty
4. Refrigeration tubing lubricant
5. Clamps or saddles to secure refrigerant tubing
6. Scale for weighing

■ CHECKLIST AFTER INSTALLATION WORK

Work List	No.	Content	Check ☑	Possibility of Failure & Checkpoint
Installation	1	Are the indoor units installed following the content of the section "■ SELECTING THE INSTALLATION SITE"? (on page 1-11-3-1)	☐	There is a possibility of light injure or loss of property.
Tubing & Wiring	2	In the case of multiple installation: Is there a wrong tubing connection with another system?	☐	The unit is inoperated or the refrigerant flows into the inoperative unit and the leakage is expected. Check if there is a wrong tubing or wiring connection with another system.
	3	In the case of multiple installation: Is there a wrong wiring connection with another system?	☐	
	4	Is the earth leakage circuit breaker (all-pole switching function provided) installed?	☐	Power failure or short circuit may cause electric shock or fire. Check installation work and ground wire work.
	5	Is there any wrong installation of optional parts or wrong wiring?	☐	
	6	Was the ground wire work performed?	☐	
	7	Are there any wrong power supply wiring, wrong connection wire, wrong signal wire or loose screw?	☐	
	8	Is the thickness of wire in accordance with rule?	☐	
	9	Is the power-supply voltage equal to the nameplate of the unit?	☐	
	10	Was the check of the airtight test, flared tube fitting and gas leakage on the welded portion performed?	☐	If the gas leakage occurs, the unit quality not only becomes inferior but affects environment. Repair it as quickly as possible.
Drain Check	11	Has the adhesive been applied to the drain connecting portion (resin portion) of the indoor unit?	☐	The resin portion cracks after a few months and it may cause water drain.
	12	Is there water leakage?	☐	Since there is a possibility of water drain, repair the drain pipe if the drain failure or water drain occurs.
	13	Indoor unit drain pipe has a downward gradient (1/100 or more) by rule. Is the drain water flowing smoothly?	☐	
Heat Insulation	14	Was the heat insulation work at a suitable location including the flared tube fitting (refrigerant tube & drain pipe) performed properly?	☐	The quality of unit not only becomes inferior but there is a possibility of the water drain. So, perform the heat insulation work properly.
Test Run	15	Did the abnormal sound occur?	☐	Check if there is a fan contact or distortion of the indoor unit.
	16	Did the cool and warm airflow discharge from the indoor unit?	☐	Check if the unit does not operate or there is a wrong tubing or wiring connection with another system.

■ APPENDIX

Care and Cleaning

WARNING

- **For safety, be sure to turn the air conditioner off and also to disconnect the power before cleaning.**
- **Do not pour water on the indoor unit to clean it. This will damage the internal components and cause an electric shock hazard.**

Air intake and outlet side (Indoor unit)

Clean the air intake and outlet side of the indoor unit with a vacuum cleaner brush, or wipe them with a clean, soft cloth.

If these parts are stained, use a clean cloth moistened with water. When cleaning the air outlet side, be careful not to force the vanes out of place.

CAUTION

- **Never use solvents or harsh chemicals when cleaning the indoor unit. Do not wipe plastic parts using very hot water.**
- **Some metal edges and the fins are sharp and may cause injury if handled improperly; be especially careful when you clean these parts.**
- **The internal coil and other components of outdoor unit must be cleaned regularly. Consult your dealer or service center.**

Air filter

It is recommended that the air filter be cleaned when the ▦ (Filter) appears on the display.

- **After Cleaning**

1. After the air filter is cleaned, reinstall it in its original position. Be sure to reinstall in reverse order.
2. [In the case of Timer Remote Controller]

   Press the Filter reset button.
   The ▦ (Filter) indicator on the display goes out.

   [In the case of High-spec Wired Remote Controller]

   Refer to the Operating Instructions attached to the optional High-spec Wired Remote Controller.

Timer Remote Controller

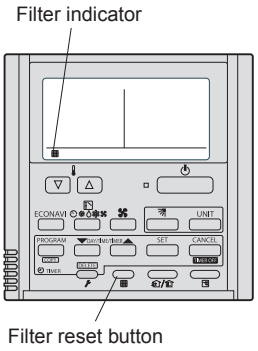

High-spec Wired Remote Controller

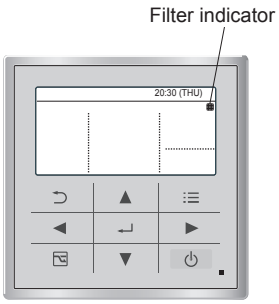

NOTE

The frequency with which the filter should be cleaned depends on the environment in which the unit is used.
Clean the filter frequently for best performance in the area of dusty or oil spots regardless of filter status.

<How to clean the filter>

1. Remove the air filter from the air-intake grille.
2. Use a vacuum cleaner to remove light dust. If there is sticky dust on the filter, wash the filter in lukewarm, soapy water, rinse it in clean water, and dry it.

<How to remove the filter>

Ceiling Type (T2)

1. Remove 2 attachment screws fixed with the latches. Take hold of the finger-hold on the air-intake grille and press it to the rear, and the grille will open downward.
2. Take hold of the finger-hold on the air filter, pull it toward you.

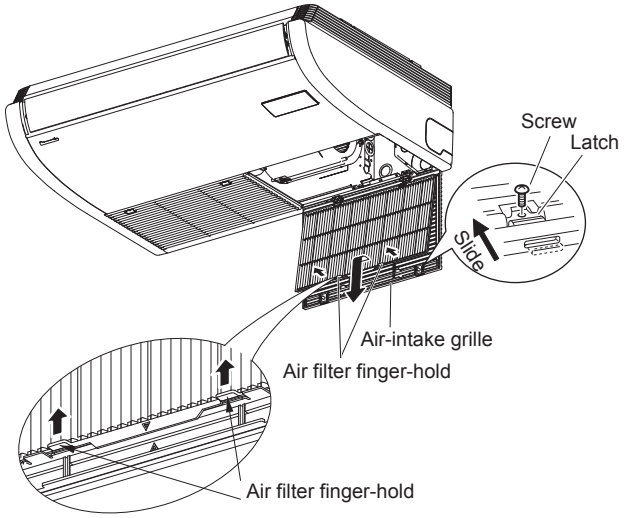

* Take hold of the finger-hold on the air filter, pull it toward you.

CAUTION

- **Certain metal edges and the condenser fins are sharp and may cause injury if handled improperly; special care should be taken when you clean these parts.**
- **Periodically check the outdoor unit to see if the air outlet or air intake is clogged with dirt or soot.**
- **The internal coil and other components must also be cleaned periodically. Consult your dealer or service center.**

Care: After a prolonged idle period

Check the indoor and outdoor unit air intakes and outlets for blockage; if there is a blockage, remove it.

Care: Before a prolonged idle period

- Operate the fan for half a day to dry out the inside.
- Disconnect the power supply and also turn off the circuit breaker.
- Clean the air filter and replace it in its original position.
- Outdoor unit internal components must be checked and cleaned periodically. Contact your local dealer for this service.

Troubleshooting

If your air conditioner does not work properly, first check the following points before requesting service.
If it still does not work properly, contact your dealer or a service center.

- **Indoor unit**

Symptom		Cause
Noise	Sound like streaming water during operation or after operation	● Sound of refrigerant liquid flowing inside unit ● Sound of drainage water through drain pipe
	Cracking noise during operation or when operation stops.	Cracking sound due to temperature changes of parts
Odor	Discharged air is smelled during operation.	Indoor odor components, cigarette odor and cosmetic odor accumulated in the air conditioner and its air is discharged. Unit inside is dusty. Consult your dealer.
Dewdrop	Dewdrop gets accumulated near air discharge during operation	Indoor moisture is cooled by cool wind and accumulated by dewdrop.
Fog	Fog occurs during operation in cooling mode. (Places where large amounts of oil mist exist at restaurants.)	● Cleaning is necessary because unit inside (heat exchanger) is dirty. Consult your dealer as technical engineering is required. ● During defrost operation
Fan is rotating for a while even though operation stops.		● Fan rotating makes operation smoothly. ● Fan may sometimes rotate because of drying heat exchanger due to settings.
Wind-direction changes while operating. Wind-direction setting cannot be made. Wind-direction cannot be changed.		● When air discharge temperature is low or during defrost operation, horizontal wind flow is made automatically. ● Flap position is occasionally set up individually.
When wind-direction is changed, flap operates several times and stops at designated position.		When wind-direction is changed, flap operates after searching for standard position.
Dust		Dust accumulation inside indoor unit is discharged.
Poor cooling or heating performance		The indoor unit is initially designed to control the indoor temperature detected by the built-in room sensor inside the indoor unit. Due to indoor unit installation position, however, the built-in sensor may occasionally sense temperature improperly; for example, temperature difference between the ceiling and floor, lighting apparatus, electric fan, windows or waist-high partition walls, etc. In this case, the unit does not operate properly at the desired temperature. You may change the use of the temperature sensor inside the indoor unit to that of the remote controller. Then the desired room temperature can be controlled properly. For details, consult your dealer.

- **Check Before Requiring Services**

Symptom	Cause	Remedy
Air conditioner does not run at all although power is turned on.	Power failure or after power failure	Press ON/OFF operation button on remote controller again.
	Operation button is turned off.	● Switch on power if breaker is turned off. ● If breaker has been tripped, consult your dealer without turning it on.
	Fuse blow out.	If blown out, consult your dealer.
Poor cooling or heating performance	Air intake or air discharge port of indoor and outdoor units is clogged with dust or obstacles.	Remove dust or obstruction.
	Fan speed switch is set to “Low”.	Change to “Medium” or “High”.
	Improper temperature settings	Refer to “Tips for Energy Saving” on this page.
	Room is exposed to direct sunlight in cooling mode.	
	Doors and /or windows are open.	
	Air filter is clogged.	Refer to “Care and Cleaning” on page 1-11-3-11.
	Too much heat sources in room in cooling mode.	Use minimum heat sources and in a short time.
	Too many people in room in cooling mode.	Reduce temperature settings or change to “Medium” or “High”.

If your air conditioner still does not work properly although you checked the points as described above, first stop the operation and turn off the power switch.
Then contact your dealer and report the serial number and symptom.
Never repair your air conditioner by yourself since it is very dangerous for you to do so.

Tips for Energy Saving

Avoid

- **Do not block the air intake and outlet of the unit. If either is obstructed, the unit will not work well, and may be damaged.**
- Do not let direct sunlight into the room. Use sunshades, blinds or curtains. If the walls and ceiling of the room are warmed by the sun, it will take longer to cool the room.

Do

- Always try to keep the air filter clean. (Refer to “Care and Cleaning” on page 1-11-3-11.) A clogged filter will impair the performance of the unit.
- To prevent conditioned air from escaping, keep windows, doors and any other openings closed.

NOTE

Should the power fail while the unit is running

If the power supply for this unit is temporarily cut off, the unit will automatically resume operation once power is restored using the same settings before the power was interrupted.

IMPORTANT INFORMATION REGARDING THE REFRIGERANT USED

NOTE

See “■ Outdoor Unit” under the Section 1-11. Installation Instructions.

■ SERVICING

CAUTION

- Any qualified person who is involved with working on or breaking into a refrigerant circuit should hold a current valid certificate from an industry-accredited assessment authority, which authorizes their competence to handle refrigerants safely in accordance with an industry recognised assessment specification.
- Servicing shall only be performed as recommended by the equipment manufacturer. Maintenance and repair requiring the assistance of other skilled personnel shall be carried out under the supervision of the person competent in the use of flammable refrigerants.
- Servicing shall be performed only as recommended by the manufacturer.
- Prior to beginning work on systems containing flammable refrigerants, safety checks are necessary to ensure that the risk of ignition is minimised. For repair to the refrigerating system, (2) to (6) shall be completed prior to conducting work on the system.

(1) Work shall be undertaken under a controlled procedure so as to minimise the risk of a flammable gas or vapour being present while the work is being performed.

(2) All maintenance staff and others working in the local area shall be instructed on the nature of work being carried out. Work in confined spaces shall be avoided. The area around the workspace shall be sectioned off. Ensure that the conditions within the area have been made safe by control of flammable material.

(3) The area shall be checked with an appropriate refrigerant detector prior to and during work, to ensure the technician is aware of potentially toxic or flammable atmospheres. Ensure that the leak detection equipment being used is suitable for use with all applicable refrigerants, i.e. non-sparking, adequately sealed or intrinsically safe.

(4) If any hot work is to be conducted on the refrigeration equipment or any associated parts, appropriate fire extinguishing equipment shall be available to hand. Have a dry powder or CO_2 fire extinguisher adjacent to the charging area.

(5) No person carrying out work in relation to a refrigeration system which involves exposing any pipe work shall use any sources of ignition in such a manner that it may lead to the risk of fire or explosion. All possible ignition sources, including cigarette smoking, should be kept sufficiently far away from the site of installation, repairing, removing and disposal, during which refrigerant can possibly be released to the surrounding space. Prior to work taking place, the area around the equipment is to be surveyed to make sure that there are no flammable hazards or ignition risks. “No Smoking” signs shall be displayed.

(6) Ensure that the area is in the open or that it is adequately ventilated before breaking into the system or conducting any hot work. A degree of ventilation shall continue during the period that the work is carried out. The ventilation should safely disperse any released refrigerant and preferably expel it externally into the atmosphere.

(7) Where electrical components are being changed, they shall be fit for the purpose and to the correct specification. At all times the manufacturer’s maintenance and service guidelines shall be followed. If in doubt, consult the manufacturer’s technical department for assistance.
- The charge size is in accordance with the room size within which the refrigerant containing parts are installed.
- The ventilation machinery and outlets are operating adequately and are not obstructed.
- Marking to the equipment continues to be visible and legible. Markings and signs that are illegible shall be corrected.
- Refrigeration pipe or components are installed in a position where they are unlikely to be exposed to any substance which may corrode refrigerant containing components, unless the components are constructed of materials which are inherently resistant to being corroded or are suitably protected against being so corroded.

(8) Repair and maintenance to electrical components shall include initial safety checks and component inspection procedures. If a fault exists that could compromise safety, then no electrical supply shall be connected to the circuit until it is satisfactorily dealt with. If the fault cannot be corrected immediately but it is necessary to continue operation, an adequate temporary solution shall be used. This shall be reported to the owner of the equipment so all parties are advised.
Initial safety checks shall include:
- That no live electrical components and wiring are exposed while charging, recovering or purging the system.
- That there is continuity of earth bonding.

- During repairs to sealed components, all electrical supplies shall be disconnected from the equipment being worked upon prior to any removal of sealed covers, etc.
- Particular attention shall be paid to the following to ensure that by working on electrical components, the casing is not altered in such a way that the level of protection is affected. This shall include damage to cables, excessive number of connections, terminals not made to original specification, damage to seals, incorrect fitting of glands, etc.
- Ensure that apparatus is mounted securely.
- Ensure that seals or sealing materials have not degraded such that they no longer serve the purpose of preventing the ingress of flammable atmospheres.
- Replacement parts shall be in accordance with the manufacturer’s specifications.

  NOTE:
  The use of silicon sealant may inhibit the effectiveness of some types of leak detection equipment. Intrinsically safe components do not have to be isolated prior to working on them.

- Do not apply any permanent inductive or capacitance loads to the circuit without ensuring that this will not exceed the permissible voltage and current permitted for the equipment in use.
- Intrinsically safe components are the only types that can be worked on while live in the presence of a flammable atmosphere.
- The test apparatus shall be at the correct rating.
- Replace components only with parts specified by the manufacturer. Unspecified parts by manufacturer may result ignition of refrigerant in the atmosphere from a leak.

■ REMOVAL AND EVACUATION

CAUTION

- When breaking into the refrigerant circuit to make repairs – or for any other purpose – conventional procedures shall be used. However, it is important that best practice is followed since flammability is a consideration.
  The following procedure shall be adhered to:
  • Remove refrigerant.
  • Purge the circuit with inert gas.
  • Evacuate.
  • Purge again with inert gas.
  • Open the circuit by cutting or brazing.
- The refrigerant charge shall be recovered into the correct recovery cylinders.
- The system shall be “flushed” with Oxygen free nitrogen (OFN) to render the unit safe.
- This process may need to be repeated several times.
- Compressed air or oxygen shall not be used for this task.
- Flushing shall be achieved by breaking the vacuum in the system with Oxygen free nitrogen (OFN) and continuing to fill until the working pressure is achieved, then venting to atmosphere, and finally pulling down to a vacuum.
- This process shall be repeated until no refrigerant is within the system.
- When the final Oxygen free nitrogen (OFN) charge is used, the system shall be vented down to atmospheric pressure to enable work to take place.
- This operation is absolutely vital if brazing operations on the pipe work are to take place.
- Ensure that the outlet for the vacuum pump is not close to any ignition sources and there is ventilation available.

■ CHARGING PROCEDURES

NOTE

See “■ Outdoor Unit” under the Section 1-11. Installation Instructions.

■ DECOMMISSIONING

CAUTION

- Before carrying out this procedure, it is essential that the technician is completely familiar with the equipment and all its details.
- It is recommended good practice that all refrigerants are recovered safely.
- Prior to the task being carried out, an oil and refrigerant sample shall be taken in case analysis is required prior to re-use of reclaimed refrigerant.
- It is essential that electrical power is available before the task is commenced.
  a) Become familiar with the equipment and its operation.
  b) Isolate system electrically.
  c) Before attempting the procedure ensure that:
     • Mechanical handling equipment is available, if required, for handling refrigerant cylinders.
     • All personal protective equipment is available and being used correctly.
     • The recovery process is supervised at all times by a competent person.
     • Recovery equipment and cylinders conform to the appropriate standards.
  d) Pump down refrigerant system, if possible.
  e) If a vacuum is not possible, make a manifold so that refrigerant can be removed from various parts of the system.
  f) Make sure that cylinder is situated on the scales before recovery takes place.
  g) Start the recovery machine and operate in accordance with manufacturer’s instructions.
  h) Do not overfill cylinders. (No more than 80 % volume liquid charge).
  i) Do not exceed the maximum working pressure of the cylinder, even temporarily.
  j) When the cylinders have been filled correctly and the process completed, make sure that the cylinders and the equipment are removed from site promptly and all isolation valves on the equipment are closed off.
  k) Recovered refrigerant shall not be charged into another refrigeration system unless it has been cleaned and checked.
- Electrostatic charge may accumulate and create a hazardous condition when charging or discharging the refrigerant.
  To avoid fire or explosion, dissipate static electricity during transfer by grounding and bonding containers and equipment before charging / discharging.

■ RECOVERY

NOTE

See “12. Recovery” on page 1-11-1-6.

■ SELECTING THE INSTALLATION SITE

4. Wall Mounted Type (K2)

Indoor Unit

AVOID:

- areas where leakage of gas may be expected.
- locations where sulfurous acid gas or corrosive gas occurs.
- places where large amounts of oil mist exist such a kitchen of a Chinese restaurant or near a machinery equipment of the factory. The oil can be adhered to the surface of the heat exchanger or resin parts and this will cause a decrease in performance, spray or drip water and deformation or damages.
- direct sunlight.
- locations near heat sources which may affect the performance of the unit.
- locations where external air may enter the room directly. This may cause “condensation” on the air discharge ports, causing them to spray or drip water.
- locations where the remote controller will be splashed with water or affected by dampness or humidity.
- installing the remote controller behind curtains or furniture.
- locations where high-frequency emissions are generated.
- turning ON the power or operate the unit until work of refrigerant tubing and electrical wiring have been completed. Highly dangerous electrical voltages are used in this system.

DO:

- Install the unit to allow cool air (and warm air) to flow smoothly. Never place objects near the air inlet or the air outlet of the unit. This will reduce the efficiency of the unit.
- select an installation location which is rigid and strong enough to support or hold the unit.
- select a location which can support a load that is four times the indoor unit weight.
- select a location for drainage work properly.
  If it is improperly, this will cause damage to property.
  - Select a location where tubing and drain pipe have the shortest run to the outdoor unit.
  - Insulate the drain pipe running inside the building.
  - Pay attention to the drainage planning not to cause neighbors trouble.
- allow room for operation and maintenance as well as unrestricted air flow around the unit.
- keep the fire alarm and the air outlet at least 1.5 m away from the unit.
- the height of the installed location shall be at least 1.8 m above the floor.
- when installing the unit in the hotel rooms or executive offices with a low-level noise, it is recommended that the external electronic expansion valve kit (optional) be installed.
- the limitation of the tubing length between the indoor and the outdoor units should be referred to the Installation Instructions of the outdoor unit.
- allow room for mounting the remote controller about 1 m off the floor, in an area that is not in direct sunlight or in the flow of cool air from the indoor unit.

NOTE

Air delivery will be degraded if the distance from the floor to the ceiling is greater than 3 m.

Wall Mounted

The air inlet and outlet of the indoor unit must be free of any obstructions to allow air to spread throughout the room.

1. The indoor unit must be within a maintenance space.

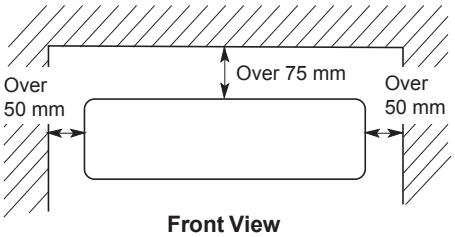

Front View

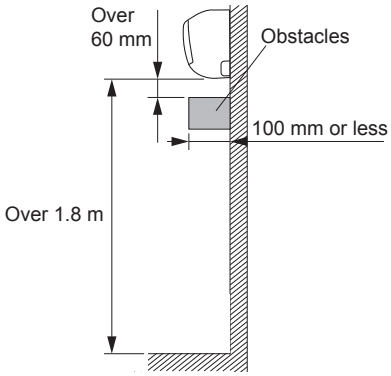

Side View

■ HOW TO INSTALL THE INDOOR UNIT

Remove the Rear Panel from the Unit

NOTE

Tubing can be extended in 6 directions as shown below.
Select the direction you need providing the shortest run to the outside unit.

Tubing direction

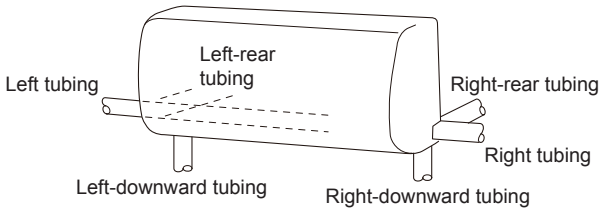

How to Make a Hole

The mounting wall should be strong and solid enough to withstand the unit's vibration.

(1) Place the installation plate from the indoor unit on the wall at the location selected.

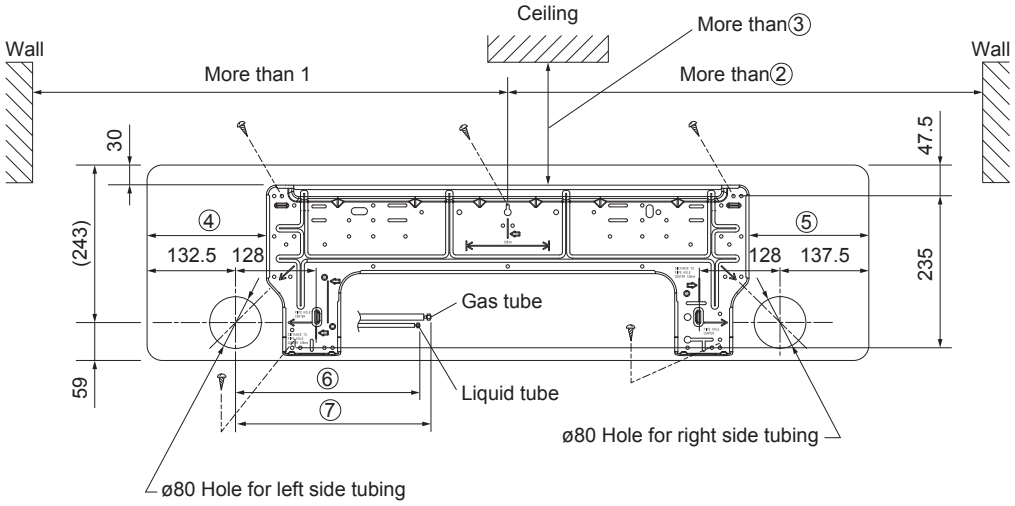

* Mount the installation plate with 5 screws completely.

unit: mm

Dimension						
①	②	③	④	⑤	⑥	⑦
607.5	612	105	183.5	188.5	400	450

Make sure the installation plate is horizontal, using a carpenter's level or tape measure to measure down from the ceiling.
Wait until after cutting the hole before attaching the installation plate to the wall.

* The center of installation plate should be at more than ① at right of the wall.
* The center of installation plate should be at more than ② at left of the wall.
* The distance from installation plate edge to ceiling should be more than ③.
* From installation plate left side to unit's left side is ④.
* From installation plate right side to unit's right side is ⑤.
* For left side tubing, tubing connection for liquid should be about ⑥ from this line.
* For left side tubing, tubing connection for gas should be about ⑦ from this line.

(2) Before making the hole, check carefully that no studs or pipes are directly run behind the spot to be cut.

CAUTION **Avoid areas where electrical wiring is located.**

The above precautions are also applicable if tubing goes through the wall in any other location.

(3) Using a sabre saw, keyhole saw or hole-cutting drill attachment, cut a hole of ø80 mm in the wall. Hole should be made at a slight downward slant to the outdoor side.

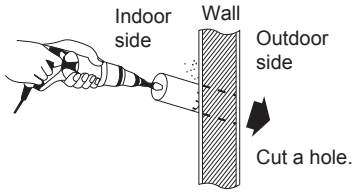

Hole Dia. (mm)
80

(4) Place a plastic cover over the end of the pipe (for indoor side only) and insert the pipe in the wall.
This will protect the tube from contacting the metal lath or wire lath, leakage due to condensation or entering small animals through the hole.

CAUTION

When the wall is hollow, please be sure to use the Piping sleeve assembly to prevent dangers caused by mice biting the connection cable.

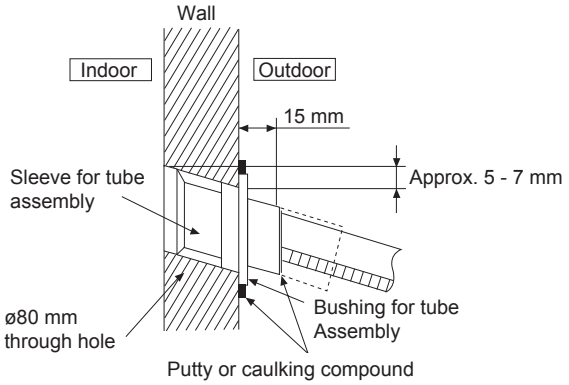

Install the Installation Plate on the Wall

If Wooden Wall

(1) Attach the installation plate to the wall with the 5 screws (4 × 20) provided.

(2) Double check with a carpenter's level or tape measure that the panel is level. This is important to install the unit properly.

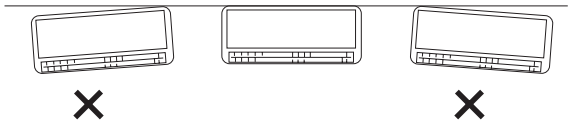

(3) Make sure the panel is flush against the wall. Any space between the wall and unit will cause noise and vibration.

If Concrete Wall

(1) When attaching the installation plate to the concrete wall, use the screws (field supply) for concrete or an optional anchor plug and fix to the hole of ø5 mm of the installation plate as shown in the figure under the section "How to Make a Hole" on page 1-11-4-2.
When fixing with bolt, attach to the hole of ø8 mm.

(2) Double check with a carpenter's level or tape measure that the plate is level. This is important to install the unit properly.

(3) Make sure the installation plate is flush against the wall. Any space between the wall and unit will cause noise and vibration.

Indoor Side Tubing

Arrangement of tubing by direction

1) Left side, left bottom or right side, right bottom tubing
Cut out the corner of the right/left frame with a hacksaw or the like.

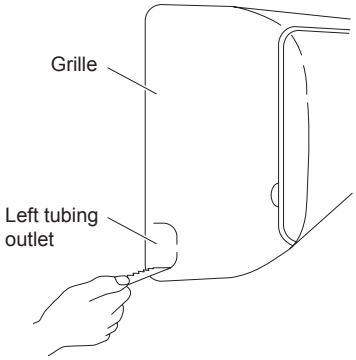

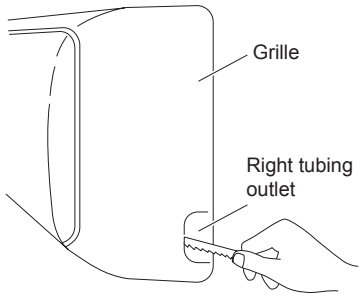

2) Right-rear or left-rear tubing
In this case, the corner of the frame need not be cut.

Right-rear side, right side, right-bottom side tubing

Be sure to insulate the drain hose and refrigerant tubing to run through the rooms.

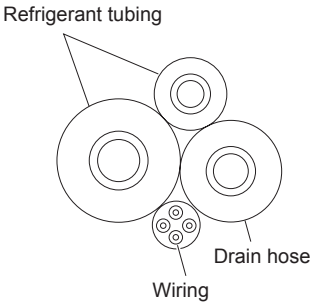

Mounting the indoor unit

1) Assemble the refrigerant tubing, drain hose and wiring together with the armoring tape.
   Do not wind the tape forcibly more than necessary.
   The drain hose should be positioned below the tubing not to apply too much tension. (Cross-section view)
2) Push the wiring, refrigerant tubing and drain hose through the hole in the wall. Mount the indoor unit to be seated so it is caught on the tabs of the installation plate.

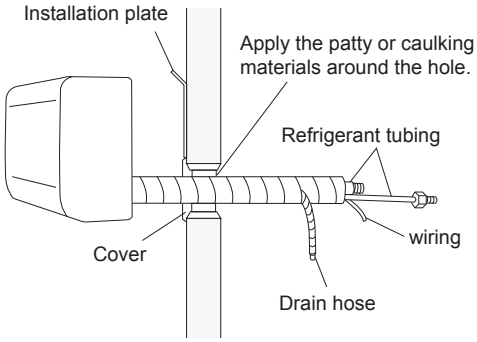

Cross-section view

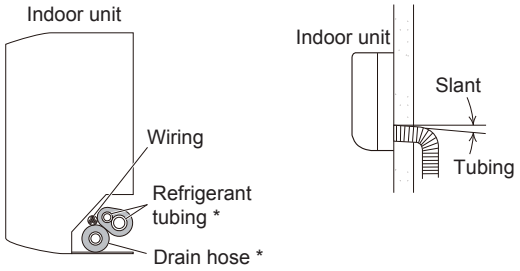

* Drain hose should be positioned below the refrigerant tubing.

Left-rear side, left side, left-bottom side tubing

(1) Pulling tubes into indoors

Adjust the tubing length so as to be placed at the same position of the liquid tube and gas tube.

(2) Switching drain hose and drain cap

- Switch the drain hose and drain cap.
  When removing the drain cap, pinch it with the pliers and pull out the drain cap. When inserting the drain cap, use a Phillips head screwdriver to push the drain cap in firmly.
- Pull out the drain hose to remove it. When attaching it, slide the drain hose fully onto the drain pan outlet. (It will be easy to slide when water is added.) After attaching the drain hose, check that it is attached securely.

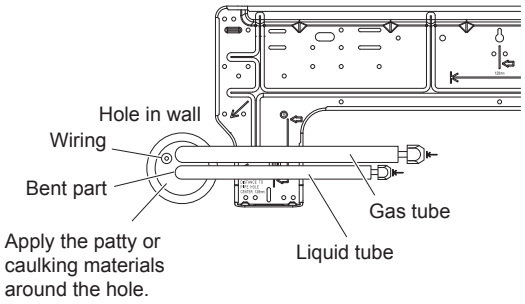

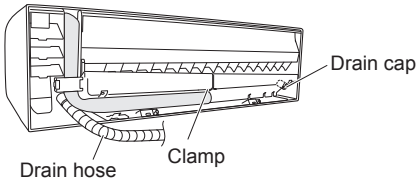

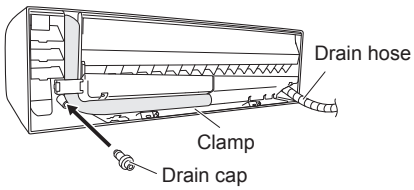

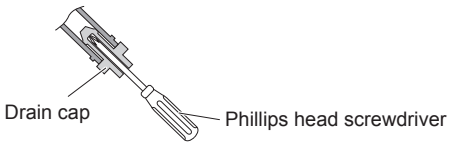

(3) Mounting the indoor unit

1) Mount the indoor unit onto the tabs on the upper part of the installation plate.
2) Connect the refrigerant tubing, drain hose and wires led inside from outdoors. (When leading an optional drain hose into the room for expansion, the drain hose inside the room should be insulated. In the case of the right-rear side, right side or right-bottom tubing, see the section “Right-rear side, right side, right-bottom side tubing” on This page.)
3) After completing a leak test, bundle the tubing and wiring together with the armoring tape. Do not wind the tape forcibly more than necessary. Store the tubing and wiring inside the tubing storage area at the back of the indoor unit. Be sure the drain hose is placed underneath the tubing.

Left-rear side, left side, left-bottom side tubing

Piping can easily be made by lifting the indoor unit with a cushioning material between the indoor unit and the wall.

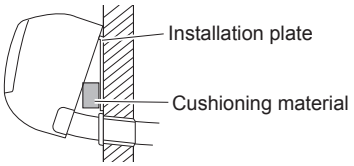

(4) Connect the drain hose.
Do not enforce the base of the drain hose when making a connection.

- Insert securely the drain hose into the PVC pipe.
- When installing the drain hose extension, connect with an optional drain hose.
  After connection, bundle with armoring tape.
- Make sure not to make the drain hose trapped.
  Insulate the connected part of the drain hose with the tubing insulation and check whether or not the water drains.

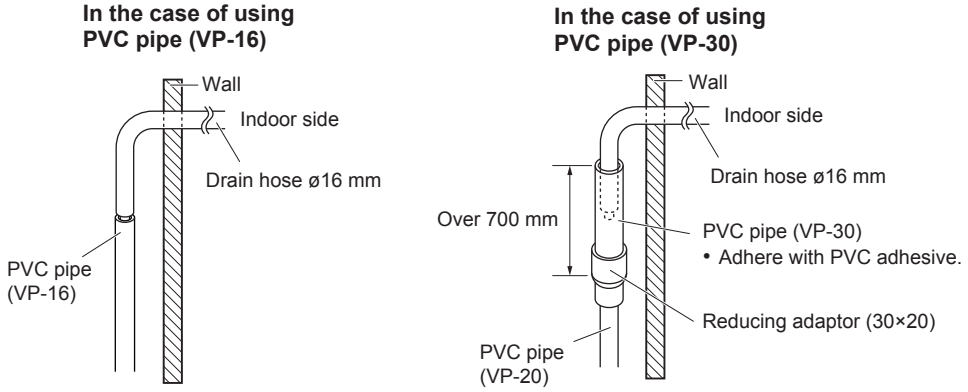

(5) When there is a long horizontal drain hose runs with very little slope to the run, water is likely to remain inside the hose. Slant the drain hose downward slightly to the outdoors and insulate it with the insulation.

- Slant downward not to remain water inside the drain hose.
- Make sure tubing does not become trapped.
- Do not let the tip of the drain hose dip into the drain water.
- Do not leave the drain hose in the sewerage. This will cause the heat exchanger erosion damage caused by the corrosive gas such as hydrogen sulfide occurred inside the sewerage and lead to a gas leak.

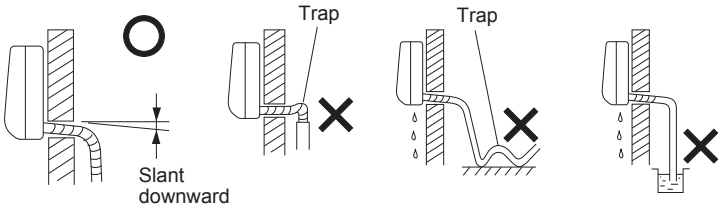

To mount and unmount indoor unit

How to mount indoor unit

1. To install the indoor unit, mount the indoor unit onto the tabs on the upper part of the installation plate.
2. Hold down the air discharge outlet and press the lower part of the indoor unit until it clicks to securely fasten to the 2 tabs on the lower part of the installation plate.
3. Close the front panel and ensure that the panel is perfectly stable.

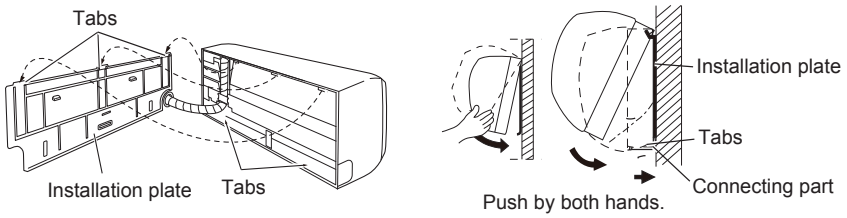

How to unmount indoor unit

Press the 2 PUSH marks on the lower part of the indoor unit and unlatch the tabs. Then lift the indoor unit and unmount.

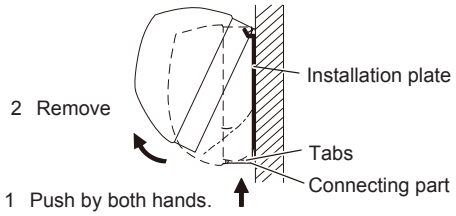

Wiring Instructions

<Power supply, Inter-unit control wiring, Remote control wiring>

(1) Open the front panel and remove the screw (×1).

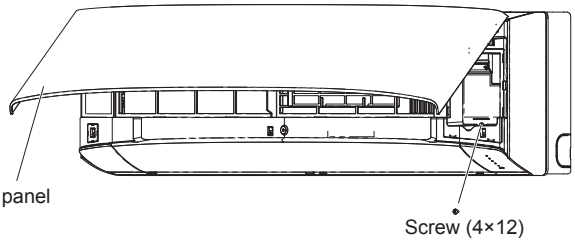

(2) Open the cover plate until it is in locked position.

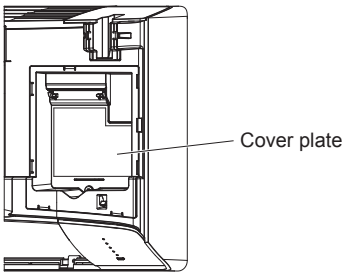

(3) Make wiring.

Wiring sample

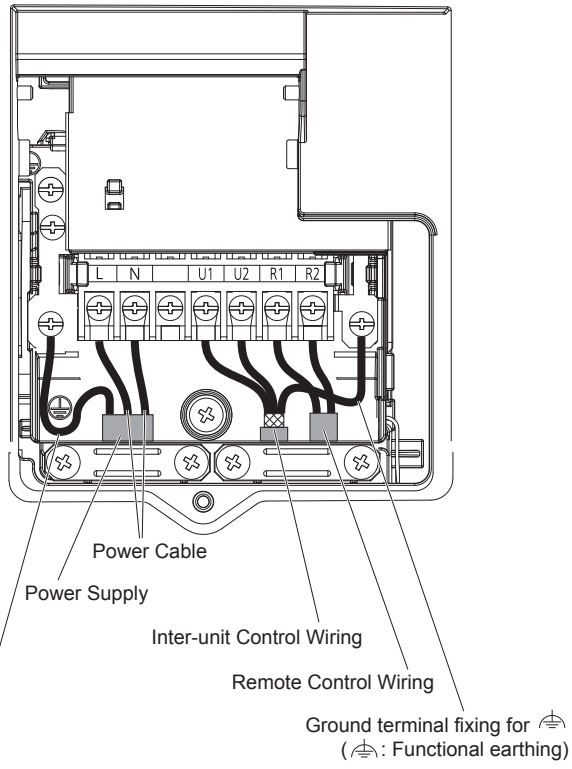

Make the earth wiring 25 - 30 mm longer than power cable.

If the terminal screws on the terminal board are tightened too hard, the screws might be damaged. See the tightening torque values as shown below.

Tightening torques for terminal screws	1.0 – 1.4 N · m {10 – 14 kgf · cm}

<Optional parts setting and wiring>

(1) Open the front panel and remove the screw (×1).
Then close the panel.

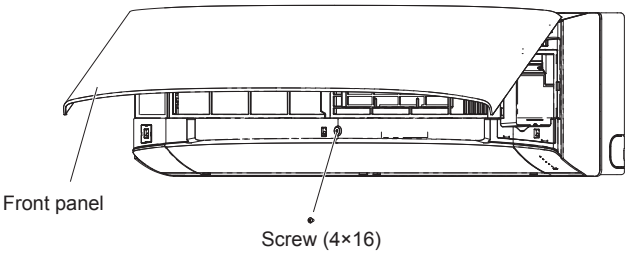

(2) Open the flap and disengage the screw covers (×3).
Then remove the screws (×3).

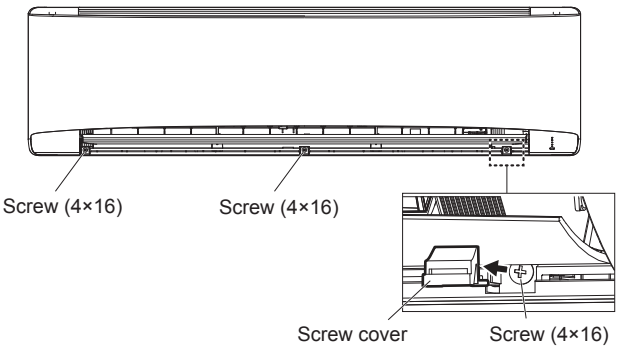

(3) Disengage the hooks holding and lifting both ends of the grille.
Remove the cover of electrical component box.

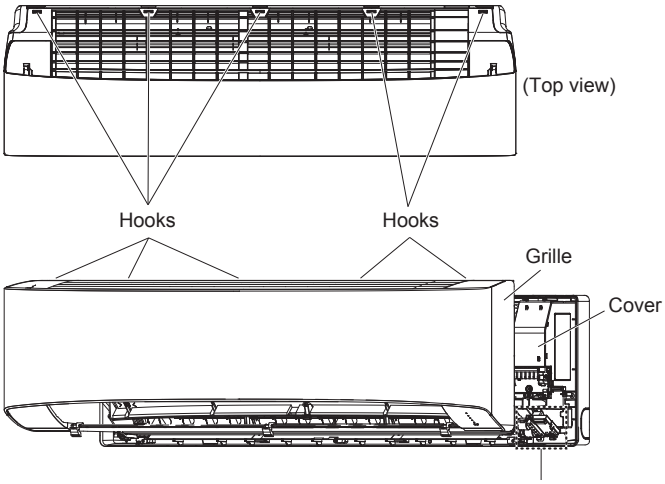

<When Using Wireless Remote Controller Instead of Wired Remote Controller>

When the wireless remote controller is to be used, slide the switch (SW502) to the ON position.

- If this setting is not made, an alarm will occur. (The operation lamp on the display blinks.)

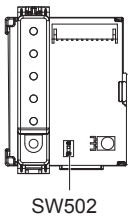

Setting status

ON: Wireless: main,
Wired: sub

OFF: Wired: main,
Wireless: sub (at shipment)

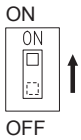

(4) Make wiring.

Refer to the instructions manual of optional parts as well.

<When connecting to other optional parts>

- Connecting to schedule timer
  Connect the wire from the schedule timer to the indoor control PCB T10 (CN061, Yellow) and functional ground screw.
- Connecting to T10 connector
  Connect the wire to the indoor control PCB T10 (CN061, Yellow).

Indoor control PCB

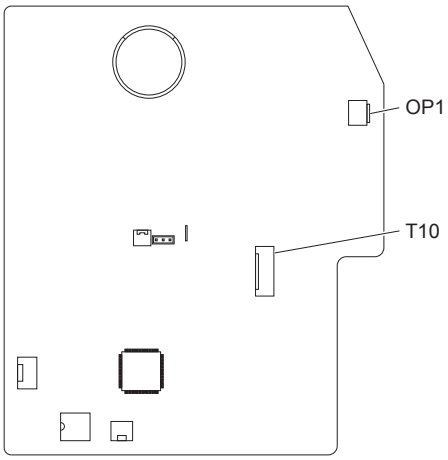

Wiring sample
(Schedule Timer)

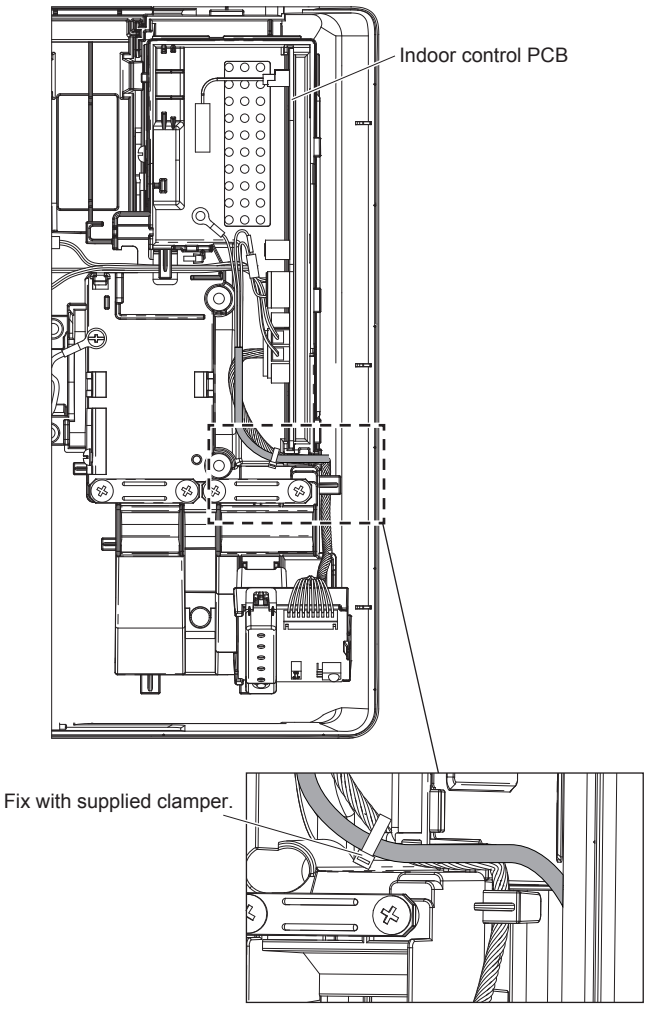

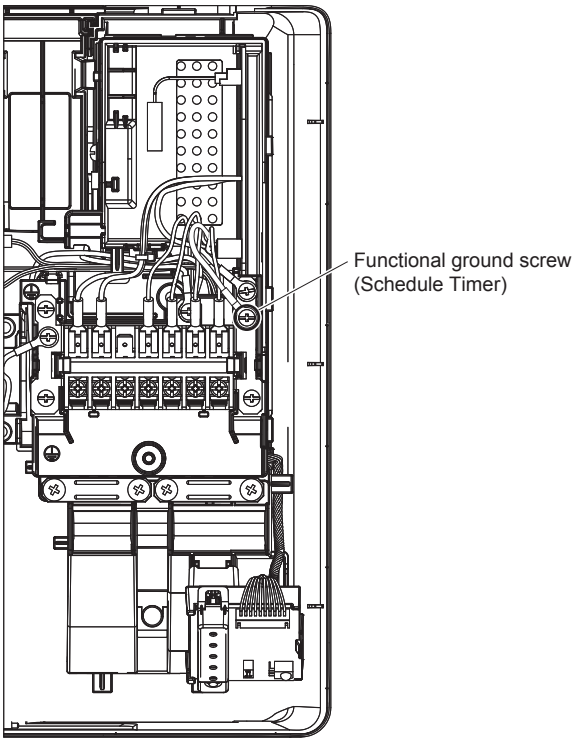

(5) When finished wiring, attach the grille in the reverse order. Tighten the screws and install the screw covers.

■ HOW TO PROCESS TUBING

Must ensure mechanical connections be accessible for maintenance purposes.

Connecting the Refrigerant Tubing

NOTE

When connecting flare at indoor side, make sure that the flare connection is used only once. If torqued up and released, the flare must be remade. Once the flare connection was torqued up correctly and leak test was made, thoroughly clean and dry the surface to remove oil, dirt and grease by following instructions of silicone sealant. Apply neutral cure & ammonia-free silicone sealant that is non-corrosive to copper & brass to the external of the flared connection to prevent the ingress of moisture on both the gas & liquid sides. (Moisture may cause freezing and premature failure of the connection.)

Use of the Flaring Method

Many of conventional split system air conditioners employ the flaring method to connect refrigerant tubes that run between indoor and outdoor units. In this method, the copper tubes are flared at each end and connected with flare nuts.

Flaring Procedure with a Flare Tool

(1) Cut the copper tube to the required length with a tube cutter. It is recommended to cut approx. 30 – 50 cm longer than the tubing length you estimate.

(2) Remove burrs at each end of the copper tubing with a tube reamer or a similar tool. This process is important and should be done carefully to make a good flare. Be sure to keep any contaminants (moisture, dirt, metal filings, etc.) from entering the tubing.

Deburring

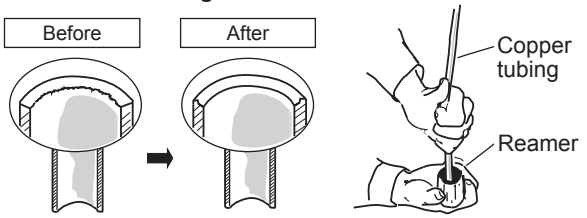

NOTE

When reaming, hold the tube end downward and be sure that no copper scraps fall into the tube.

(3) Remove the flare nut from the unit and be sure to mount it on the copper tube.

(4) Make a flare at the end of the copper tube with a flare tool.

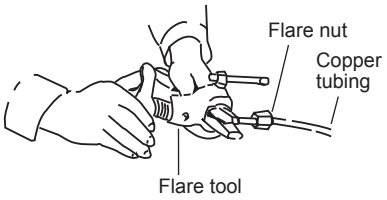

NOTE

When flared joints are reused, the flare part shall be re-fabricated. A good flare should have the following characteristics:

- inside surface is glossy and smooth
- edge is smooth
- tapered sides are of uniform length

Caution Before Connecting Tubes Tightly

(1) Apply a sealing cap or water-proof tape to prevent dust or water from entering the tubes before they are used.

(2) Be sure to apply refrigerant lubricant (ether oil) to the inside of the flare nut before making piping connections. This is effective for reducing gas leaks.

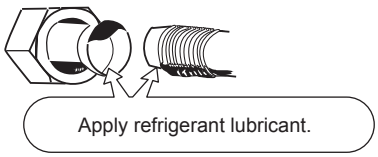

(3) For proper connection, align the union tube and flare tube straight with each other, then screw on the flare nut lightly at first to obtain a smooth match.

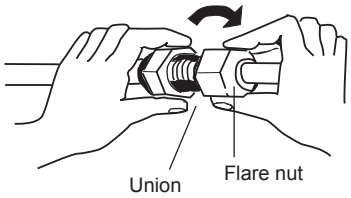

- Adjust the shape of the liquid tube using a tube bender at the installation site and connect it to the liquid tubing side valve using a flare.

Connecting Tubing Between Indoor and Outdoor Units

(1) Tightly connect the indoor-side refrigerant tubing extended from the wall with the outdoor-side tubing.

Indoor Unit Tubing Connection (ℓ_1, ℓ_2...ℓ_{n-1})

Indoor unit type	50	60	71	100
Gas tubing (mm)	ø12.7	ø15.88		
Liquid tubing (mm)	ø6.35	ø9.52		

(2) To fasten the flare nuts, apply specified torque.

- When removing the flare nuts from the tubing connections, or when tightening them after connecting the tubing, be sure to use a torque wrench and a spanner.
  If the flare nuts are over-tightened, the flare may be damaged, which could result in refrigerant leakage and cause injury or asphyxiation to room occupants.

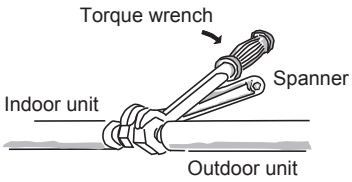

- For the flare nuts at tubing connections, be sure to use the flare nuts that were supplied with the unit, or else flare nuts for R410A, R32 (type 2). The refrigerant tubing that is used must be of the correct wall thickness as shown in the table below.

Tube diameter	Tightening torque (approximate)	Tube thickness
ø6.35 (1/4")	14 – 18 N · m {140 – 180 kgf · cm}	0.8 mm
ø9.52 (3/8")	34 – 42 N · m {340 – 420 kgf · cm}	0.8 mm
ø12.7 (1/2")	49 – 55 N · m {490 – 550 kgf · cm}	0.8 mm
ø15.88 (5/8")	68 – 82 N · m {680 – 820 kgf · cm}	1.0 mm

  Because the pressure is approximately 1.6 times higher than conventional refrigerant R22 pressure, the use of ordinary flare nuts (type 1) or thin-walled tubes may result in tube rupture, injury, or asphyxiation caused by refrigerant leakage.
- In order to prevent damage to the flare caused by over-tightening of the flare nuts, use the table above as a guide when tightening.
- When tightening the flare nut on the liquid tube, use an adjustable wrench with a nominal handle length of 200 mm.

> ! Ensure to do the re-flaring of pipes before connecting to units to avoid leaking.

To prevent the ingress of moisture into the joint which could have the potential to freeze and then cause leakage, the joint must be sealed with suitable silicone and insulation material. The joint should be sealed on both liquid and gas side.

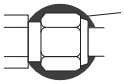

Silicone Sealant must be neutral cure and ammonia free. Use of silicon containing ammonia can lead to stress corrosion on the joint and cause leakage.

Insulating the Refrigerant Tubing

Unless the insulation is made, condensation can cause damage to the interior of a property. Use the supplied insulation material.

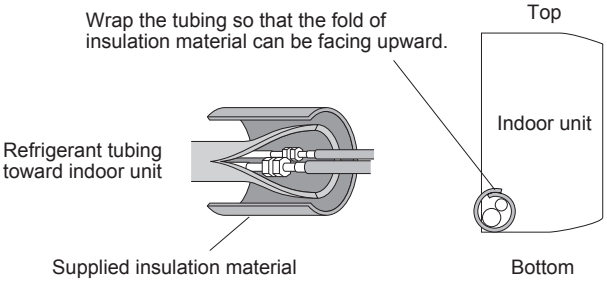

Tubing Insulation

Must ensure that pipe-work shall be protected from physical damage.

- Thermal insulation must be applied to all units tubing, including distribution joint (field supply).

Two tubes arranged together

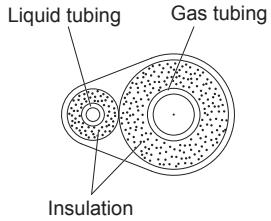

  * For gas tubing, the insulation material must be heat resistant to 120°C or above. For other tubing, it must be heat resistant to 80°C or above.

  Insulation material thickness must be 10 mm or greater.

  If the conditions inside the ceiling exceed DB 30°C and RH 70%, increase the thickness of the gas tubing insulation material by 1 step.

CAUTION

If the exterior of the outdoor unit valves has been finished with a square duct covering, make sure you allow sufficient space to access the valves and to allow the panels to be attached and removed.

NOTE

Gas Leakage Detector
Note that the gas leakage detector should be capable of detecting the refrigerant R410A, R32.

Air Purging
Refer to “AIR PURGING” in the separate Installation Instructions for the outdoor unit in regard to air purging with a vacuum pump (for test run) preparation.

Taping the flare nuts
Cover up the tubing connections with the supplied flare insulator. Then fasten the insulator at both ends with the vinyl clamps (field supply).

Insulation material
The material used for insulation must have good insulation characteristics, be easy to use, be age resistant, and must not easily absorb moisture.

CAUTION

After a tube has been insulated, never try to bend it into a narrow curve because it can cause the tube to break or crack. Never grasp the drain or refrigerant connecting outlets when moving the unit.

Taping the Tubes

(1) At this time, the refrigerant tubes (and electrical wiring if local codes permit) should be taped together with armoring tape in 1 bundle. To prevent condensation from overflowing the drain pan, keep the drain hose separate from the refrigerant tubing.

(2) Wrap the armoring tape from the bottom of the outdoor unit to the top of the tubing where it enters the wall. As you wrap the tubing, overlap half of each previous tape turn.

(3) Clamp the tubing bundle to the wall, using 1 clamp approx. each meter.

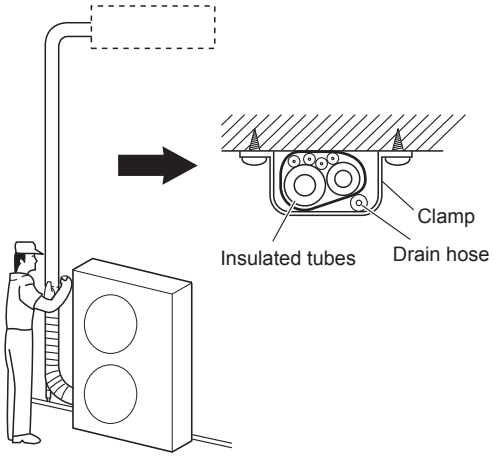

NOTE

Do not wind the armoring tape too tightly since this will decrease the heat insulation effect. Also ensure that the condensation drain hose splits away from the bundle and drips clear of the unit and the tubing.

Finishing the Installation

After finishing insulating and taping over the tubing, use sealing putty to seal off the hole in the wall to prevent rain and draft from entering.

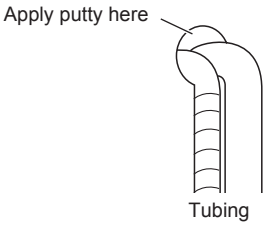

■ BEFORE SWITCHING ON

- Check if the filter is installed properly.
- Check if the horizontal airflow direction louver works properly.

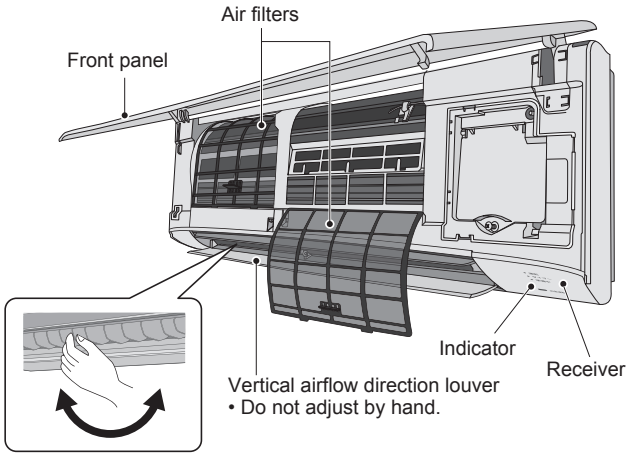

Horizontal airflow direction louver
• Manually-operated adjustable louvers

■ HOW TO INSTALL THE TIMER REMOTE CONTROLLER OR HIGH-SPEC WIRED REMOTE CONTROLLER (OPTIONAL PART)

NOTE

See “Section 2. TEST RUN”.

■ PRECAUTIONS ON TEST RUN

- Request that the customer be present when the test run is performed. At this time, explain the operation manual and have the customer perform the actual steps.
- Check that the 220 – 240 V AC power is not connected to the inter-unit control wiring connector terminal.
  * If 220 – 240 V AC is accidentally applied, the indoor unit control PCB fuse will blow in order to protect the PCB.
    In this case, make the wiring correctly. Then reconnect the connector to pins 2 and 3 from pins 1 and 2 on the 3P DIP pin (EMG).
    If the operation is not activated even if the short circuit pin is reconnected, cut the jumper on the indoor unit PCB.
    (Be sure to turn the power OFF before performing this work.)

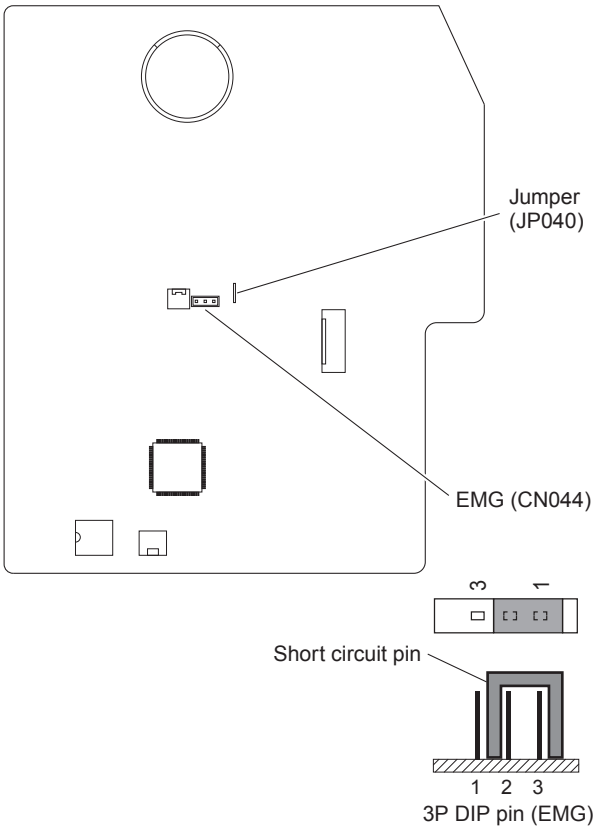

Accessories Supplied with Unit

Make sure all accessory parts listed are with the system before beginning.

Part Name	Figure	Q'ty	Remarks
Installation plate	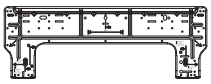	1	
Screw (4×20)		5	For installation plate installation
Flare insulation		1	For flare nut insulation
Clamper		1	For fixing wires (optional)

Type of Copper Tube and Insulation Material

If you wish to purchase these materials separately from a local source, you will need:

1. Deoxidized annealed copper tube for refrigerant tubing. Cut each tube to the appropriate lengths +30 cm to 40 cm to dampen vibration between units.
2. Foamed polyethylene insulation for copper tubes as required to precise length of tubing. Wall thickness of the insulation should be not less than 8 mm.
3. Use insulated copper wire for field wiring. Wire size varies with the total length of wiring. Refer to **1-10. Electrical Wiring** for details.

CAUTION

Check local electrical codes and regulations before obtaining wire. Also, check any specified instructions or limitations.

Additional Materials Required for Installation

1. Refrigeration (armored) tape
2. Insulated staples or clamps for connecting wire (See your local codes.)
3. Putty
4. Refrigeration tubing lubricant
5. Clamps or saddles to secure refrigerant tubing
6. Scale for weighing

■ CHECKLIST AFTER INSTALLATION WORK

Work List	No.	Content	Check ☑	Possibility of Failure & Checkpoint
Installation	1	Are the indoor units installed following the content of the section "■ SELECTING THE INSTALLATION SITE"? (on page 1-11-4-1)	☐	There is a possibility of light injure or loss of property.
Tubing & Wiring	2	Is the earth leakage circuit breaker (all-pole switching function provided) installed?	☐	Power failure or short circuit may cause electric shock or fire. Check installation work and ground wire work.
	3	Is there any wrong installation of optional parts or wrong wiring?	☐	
	4	Was the ground wire work performed?	☐	
	5	Are there any wrong power supply wiring, wrong connection wire, wrong signal wire or loose screw?	☐	
	6	Is the thickness of wire in accordance with rule?	☐	
	7	Is the power-supply voltage range equal to the nameplate of the unit?	☐	
	8	Was the check of the airtight test, flared tube fitting and gas leakage on the welded portion performed?	☐	If the gas leakage occurs, the unit quality not only becomes inferior but affects environment. Repair it as quickly as possible.
Drain Check	9	Has the adhesive been applied to the drain connecting portion (resin portion) of the indoor unit?	☐	The resin portion cracks after a few months and it may cause water drain.
	10	Is there water leakage?	☐	Since there is a possibility of water drain, repair the drain pipe if the drain failure or water drain occurs.
	11	Indoor unit drain pipe has a downward gradient (1/100 or more) by rule. Is the drain water flowing smoothly?	☐	
Heat Insulation	12	Was the heat insulation work at a suitable location including the flared tube fitting (refrigerant tube & drain pipe) performed properly?	☐	The quality of unit not only becomes inferior but there is a possibility of the water drain. So, perform the heat insulation work properly.
Test Run	13	Did the abnormal sound occur?	☐	Check if there is a fan contact or distortion of the indoor unit.
	14	Did the cool and warm airflow discharge from the indoor unit?	☐	Check if the unit does not operate or there is a wrong tubing or wiring connection with another system.

Important Information Regarding The Refrigerant Used

NOTE

See "■ Outdoor Unit" under the Section 1-11. Installation Instructions.

■ SERVICING

CAUTION

- Any qualified person who is involved with working on or breaking into a refrigerant circuit should hold a current valid certificate from an industry-accredited assessment authority, which authorizes their competence to handle refrigerants safely in accordance with an industry recognised assessment specification.
- Servicing shall only be performed as recommended by the equipment manufacturer. Maintenance and repair requiring the assistance of other skilled personnel shall be carried out under the supervision of the person competent in the use of flammable refrigerants.
- Servicing shall be performed only as recommended by the manufacturer.
- Prior to beginning work on systems containing flammable refrigerants, safety checks are necessary to ensure that the risk of ignition is minimised. For repair to the refrigerating system, (2) to (6) shall be completed prior to conducting work on the system.

(1) Work shall be undertaken under a controlled procedure so as to minimise the risk of a flammable gas or vapour being present while the work is being performed.

(2) All maintenance staff and others working in the local area shall be instructed on the nature of work being carried out. Work in confined spaces shall be avoided. The area around the workspace shall be sectioned off. Ensure that the conditions within the area have been made safe by control of flammable material.

(3) The area shall be checked with an appropriate refrigerant detector prior to and during work, to ensure the technician is aware of potentially toxic or flammable atmospheres. Ensure that the leak detection equipment being used is suitable for use with all applicable refrigerants, i.e. non-sparking, adequately sealed or intrinsically safe.

(4) If any hot work is to be conducted on the refrigeration equipment or any associated parts, appropriate fire extinguishing equipment shall be available to hand. Have a dry powder or CO_2 fire extinguisher adjacent to the charging area.

(5) No person carrying out work in relation to a refrigeration system which involves exposing any pipe work shall use any sources of ignition in such a manner that it may lead to the risk of fire or explosion. All possible ignition sources, including cigarette smoking, should be kept sufficiently far away from the site of installation, repairing, removing and disposal, during which refrigerant can possibly be released to the surrounding space. Prior to work taking place, the area around the equipment is to be surveyed to make sure that there are no flammable hazards or ignition risks. "No Smoking" signs shall be displayed.

(6) Ensure that the area is in the open or that it is adequately ventilated before breaking into the system or conducting any hot work. A degree of ventilation shall continue during the period that the work is carried out. The ventilation should safely disperse any released refrigerant and preferably expel it externally into the atmosphere.

(7) Where electrical components are being changed, they shall be fit for the purpose and to the correct specification. At all times the manufacturer's maintenance and service guidelines shall be followed. If in doubt, consult the manufacturer's technical department for assistance.
- The charge size is in accordance with the room size within which the refrigerant containing parts are installed.
- The ventilation machinery and outlets are operating adequately and are not obstructed.
- Marking to the equipment continues to be visible and legible. Markings and signs that are illegible shall be corrected.
- Refrigeration pipe or components are installed in a position where they are unlikely to be exposed to any substance which may corrode refrigerant containing components, unless the components are constructed of materials which are inherently resistant to being corroded or are suitably protected against being so corroded.

(8) Repair and maintenance to electrical components shall include initial safety checks and component inspection procedures. If a fault exists that could compromise safety, then no electrical supply shall be connected to the circuit until it is satisfactorily dealt with. If the fault cannot be corrected immediately but it is necessary to continue operation, an adequate temporary solution shall be used. This shall be reported to the owner of the equipment so all parties are advised.
Initial safety checks shall include:
- That no live electrical components and wiring are exposed while charging, recovering or purging the system.
- That there is continuity of earth bonding.

- During repairs to sealed components, all electrical supplies shall be disconnected from the equipment being worked upon prior to any removal of sealed covers, etc.
- Particular attention shall be paid to the following to ensure that by working on electrical components, the casing is not altered in such a way that the level of protection is affected. This shall include damage to cables, excessive number of connections, terminals not made to original specification, damage to seals, incorrect fitting of glands, etc.
- Ensure that apparatus is mounted securely.
- Ensure that seals or sealing materials have not degraded such that they no longer serve the purpose of preventing the ingress of flammable atmospheres.
- Replacement parts shall be in accordance with the manufacturer's specifications.

  NOTE:
  The use of silicon sealant may inhibit the effectiveness of some types of leak detection equipment. Intrinsically safe components do not have to be isolated prior to working on them.

- Do not apply any permanent inductive or capacitance loads to the circuit without ensuring that this will not exceed the permissible voltage and current permitted for the equipment in use.
- Intrinsically safe components are the only types that can be worked on while live in the presence of a flammable atmosphere.
- The test apparatus shall be at the correct rating.
- Replace components only with parts specified by the manufacturer. Unspecified parts by manufacturer may result ignition of refrigerant in the atmosphere from a leak.

■ REMOVAL AND EVACUATION

CAUTION

- When breaking into the refrigerant circuit to make repairs – or for any other purpose – conventional procedures shall be used. However, it is important that best practice is followed since flammability is a consideration.
  The following procedure shall be adhered to:
  • Remove refrigerant.
  • Purge the circuit with inert gas.
  • Evacuate.
  • Purge again with inert gas.
  • Open the circuit by cutting or brazing.
- The refrigerant charge shall be recovered into the correct recovery cylinders.
- The system shall be “flushed” with Oxygen free nitrogen (OFN) to render the unit safe.
- This process may need to be repeated several times.
- Compressed air or oxygen shall not be used for this task.
- Flushing shall be achieved by breaking the vacuum in the system with Oxygen free nitrogen (OFN) and continuing to fill until the working pressure is achieved, then venting to atmosphere, and finally pulling down to a vacuum.
- This process shall be repeated until no refrigerant is within the system.
- When the final Oxygen free nitrogen (OFN) charge is used, the system shall be vented down to atmospheric pressure to enable work to take place.
- This operation is absolutely vital if brazing operations on the pipe work are to take place.
- Ensure that the outlet for the vacuum pump is not close to any ignition sources and there is ventilation available.

■ CHARGING PROCEDURES

NOTE

See “■ Outdoor Unit” under teh Section 1-11. Installation Instructions.

■ DECOMMISSIONING

CAUTION

- Before carrying out this procedure, it is essential that the technician is completely familiar with the equipment and all its details.
- It is recommended good practice that all refrigerants are recovered safely.
- Prior to the task being carried out, an oil and refrigerant sample shall be taken in case analysis is required prior to re-use of reclaimed refrigerant.
- It is essential that electrical power is available before the task is commenced.
  a) Become familiar with the equipment and its operation.
  b) Isolate system electrically.
  c) Before attempting the procedure ensure that:
     • Mechanical handling equipment is available, if required, for handling refrigerant cylinders.
     • All personal protective equipment is available and being used correctly.
     • The recovery process is supervised at all times by a competent person.
     • Recovery equipment and cylinders conform to the appropriate standards.
  d) Pump down refrigerant system, if possible.
  e) If a vacuum is not possible, make a manifold so that refrigerant can be removed from various parts of the system.
  f) Make sure that cylinder is situated on the scales before recovery takes place.
  g) Start the recovery machine and operate in accordance with manufacturer’s instructions.
  h) Do not overfill cylinders. (No more than 80 % volume liquid charge).
  i) Do not exceed the maximum working pressure of the cylinder, even temporarily.
  j) When the cylinders have been filled correctly and the process completed, make sure that the cylinders and the equipment are removed from site promptly and all isolation valves on the equipment are closed off.
  k) Recovered refrigerant shall not be charged into another refrigeration system unless it has been cleaned and checked.
- Electrostatic charge may accumulate and create a hazardous condition when charging or discharging the refrigerant.
  To avoid fire or explosion, dissipate static electricity during transfer by grounding and bonding containers and equipment before charging / discharging.

■ RECOVERY

NOTE

See “12. Recovery” on page 1-11-1-6.

■ SELECTING THE INSTALLATION SITE

5. Low Silhouette Ducted Type (F1)

Indoor Unit

AVOID:

- areas where leakage of flammable gas may be expected.
- places where large amounts of oil mist exist.
- direct sunlight.
- locations near heat sources which may affect the performance of the unit.
- locations where external air may enter the room directly. This may cause “condensation” on the air discharge ports, causing them to spray or drip water.
- locations where the remote controller will be splashed with water or affected by dampness or humidity.
- installing the remote controller behind curtains or furniture.
- locations where high-frequency emissions are generated.

DO:

- select an appropriate position from which every corner of the room can be uniformly cooled.
- select a location where the ceiling is strong enough to support the weight of the unit.
- select a location where tubing and drain pipe have the shortest run to the outdoor unit.
- allow room for operation and maintenance as well as unrestricted airflow around the unit.
- the limitation of the tubing length between the indoor and the outdoor units should be referred to the Installation Instructions of the outdoor unit.
- allow room for mounting the remote controller about 1m off the floor, in an area that is not in direct sunlight or in the flow of cool air from the indoor unit.

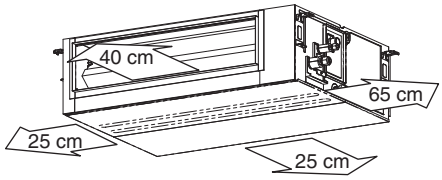

■ HOW TO INSTALL THE INDOOR UNIT

Low Silhouette Ducted Type (Type F1)

Required Minimum Space for Installation and Service

● This air conditioner is usually installed above the ceiling so that the indoor unit and ducts are not visible. Only the air intake and air outlet ports are visible from the unit bottom.

Minimum space for installation and service

Unit: mm

Type	50	60, 71	100, 125, 140
A (Length)	867	1,067	1,467

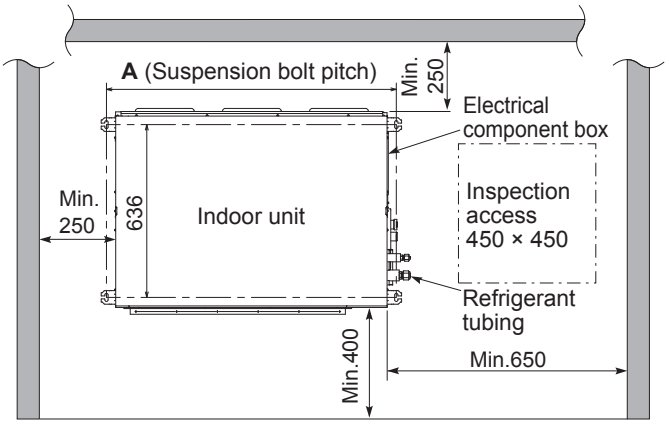

Unit: mm

● It is recommended that space be provided (450 × 450 mm) for checking and servicing the electrical system.

Detailed dimensions of indoor unit

Unit: mm

Type	A	B	C	D	E	F
50	867	800	450 (Pitch 150 × 3)	71	592	12
60, 71	1,067	1,000	750 (Pitch 150 × 5)	21	792	16
100, 125, 140	1,467	1,400	1,050 (Pitch 150 × 7)	71	1,192	20

a) Refrigerant tubing joint (liquid tube)
b) Refrigerant tubing joint (gas tube)
c) Upper drain port VP25 (O.D. 32 mm) 200 mm flexible hose supplied
d) Bottom drain port VP25 (O.D. 32 mm)
e) Suspension lug (4 – 12 × 30 mm)
f) Power supply outlet
g) Fresh air intake port (ø150 mm)
h) Flange for flexible air outlet duct
i) Electrical component box
j) Filter

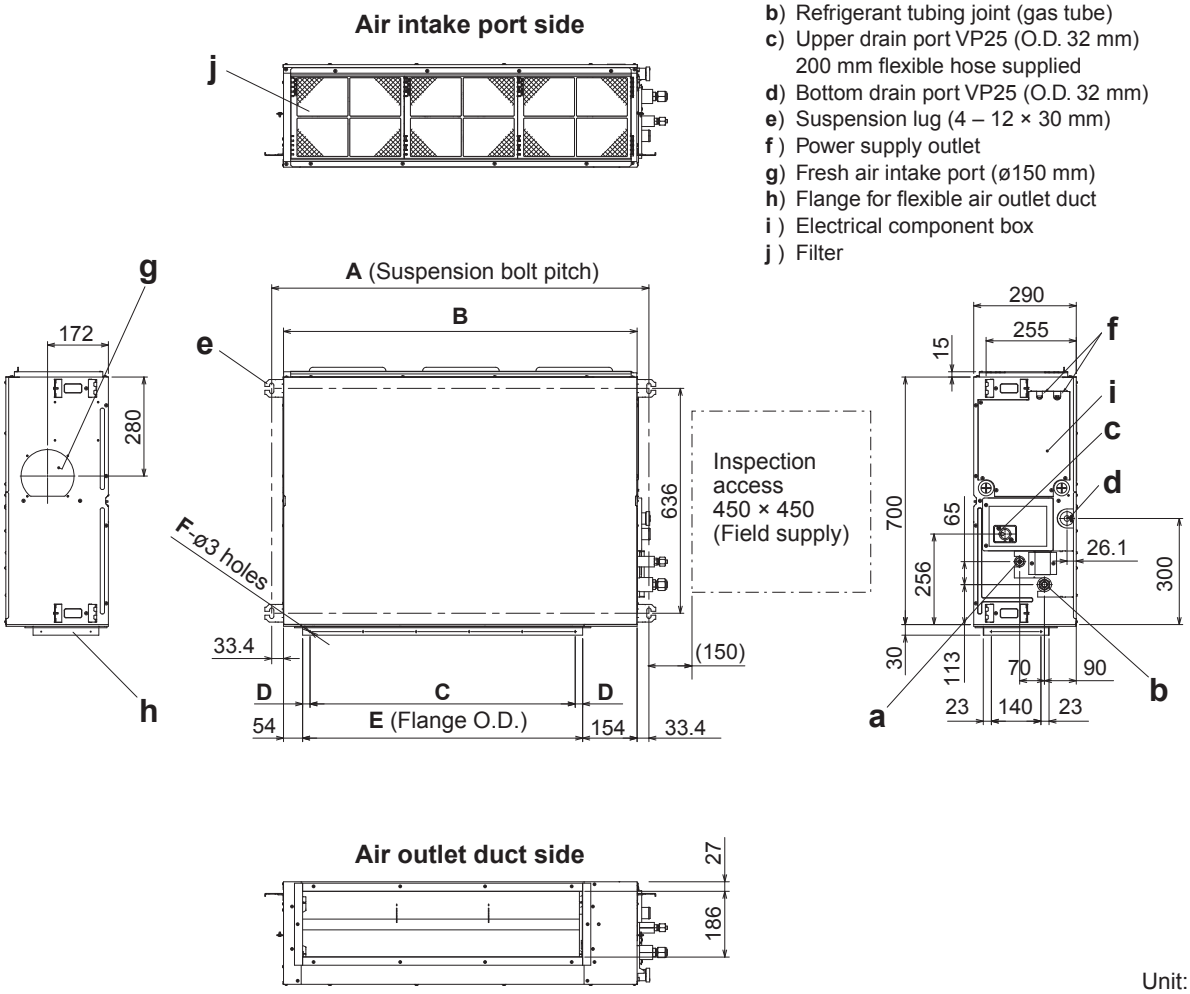

Unit: mm

Suspending the Indoor Unit

Depending on the ceiling type:

a) Insert suspension bolts
or

b) Use existing ceiling supports or construct a suitable support.

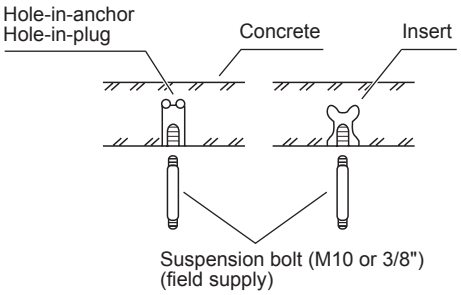

a)

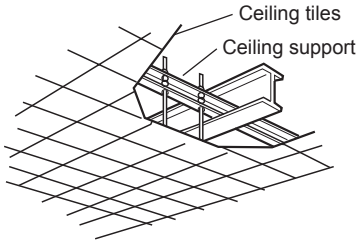

b)

WARNING

It is important that you use extreme care in supporting the indoor unit inside the ceiling. Ensure that the ceiling is strong enough to support the weight of the unit. Before hanging the unit, test the strength of each attached suspension bolt.

(1) When placing the unit inside the ceiling, determine the pitch of the suspension bolts referring to the dimensional data as shown in the tables and diagrams under the section "Required Minimum Space for Installation and Service" on page 1-11-5-2.
Tubing must be laid and connected inside the ceiling when suspending the unit. If the ceiling is already constructed, lay the tubing into position for connection to the unit before placing the unit inside the ceiling.

(2) Screw in the suspension bolts allowing them to protrude from the ceiling. (Cut the ceiling material, if necessary.)

(3) Thread the 3 hexagonal nuts and 2 washers (field supply) onto each of the 4 suspension bolts. Use 1 nut and 1 washer for the upper part, and 2 nuts and 1 washer for the lower part, so that the unit will not fall off the suspension lugs.

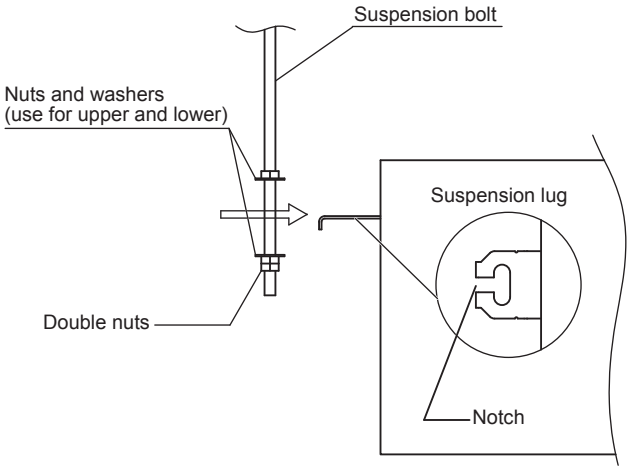

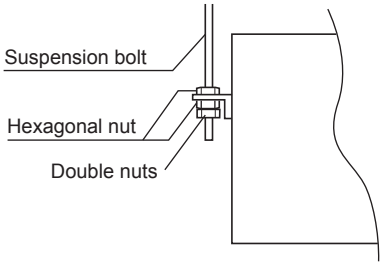

● This shows an example of installation.

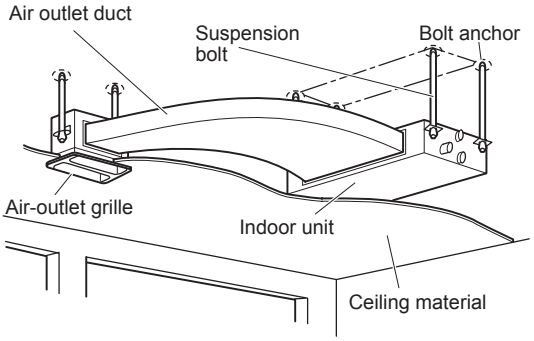

Installing the Drain Pipe

(1) Prepare standard hard PVC pipe (O.D. 32 mm) for the drain and use the supplied hose band to prevent water leaks.
The PVC pipe must be purchased separately.
The transparent drain part on the unit allows you to check drainage.

CAUTION

- **Do not use adhesive tape at the drain connection port on the indoor unit.**
- **Insert the drain pipe until it contacts the socket, and then secure it tightly with the hose band.**
- **Do not use the supplied drain hose bent at a 90° angle. (The maximum permissible bend is 45°.)**
- **Tighten the hose clamps so their locking nuts face upward.**

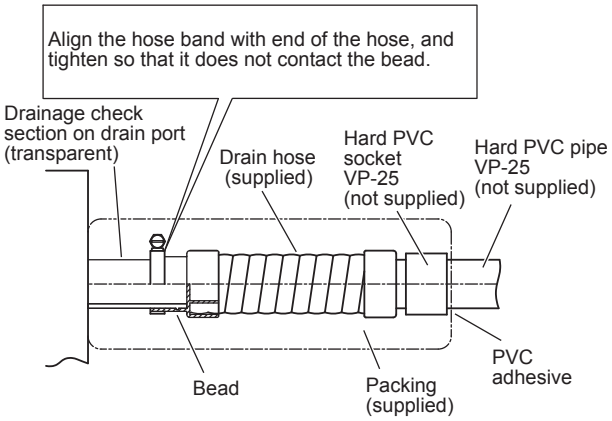

(2) After connecting the drain pipe securely, wrap the supplied packing and drain pipe insulator around the pipe, then secure it with the vinyl clamps.

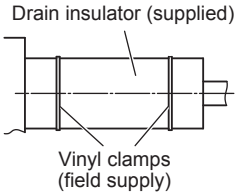

NOTE

Make sure the drain pipe has a downward gradient (1/100 or more) and that there are no water traps.

CAUTION

- **Do not install an air bleeder as this may cause water to spray from the drain pipe outlet.**

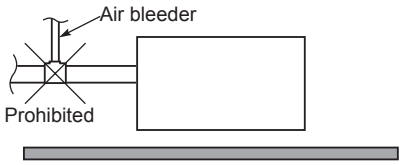

- **If it is necessary to increase the height of the drain pipe, the section directly after the connection port can be raised a maximum of 500 mm. Do not raise it any higher than 500 mm, as this could result in water leaks.**

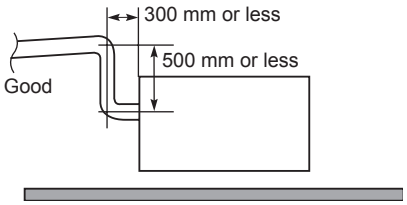

- Do not install the pipe with an upward gradient from the connection port. This will cause the drain water to flow backward and leak when the unit is not operating.

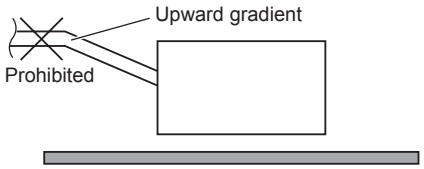

- Do not apply force to the piping on the unit side when connecting the drain pipe. The pipe should not be allowed to hang unsupported from its connection to the unit. Fasten the pipe to a wall, frame, or other support as close to the unit as possible.

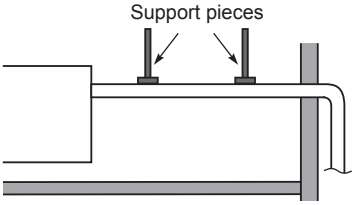

Checking the Drainage

After wiring and drain piping are completed, use the following procedure to check that the water will drain smoothly. For this, prepare a bucket and wiping cloth to catch and wipe up spilled water.

(1) Connect power to the power terminal board (R, S terminals) inside the electrical component box.

(2) Remove the tube cover and slowly pour about 1,200 cc of water through the opening into the drain pan to check drainage.

(3) Short-circuit the check pin (CHK) on the indoor control circuit board and operate the drain pump. Check the water flow through the transparent drain port and see if there is any leakage.

CAUTION

Be careful since the fan will start when you short the pin on the indoor control board.

(4) When the drainage check is complete, open the check pin (CHK) and remount the insulator and drain cap onto the drain inspection port.

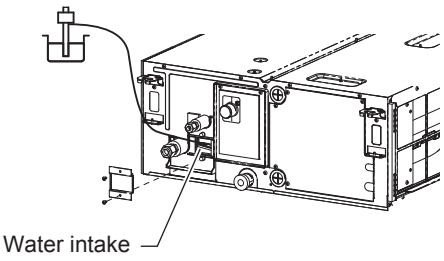

Connecting Duct to Air Intake Port Side

(1) First pull out a filter in the direction of the electrical equipment box in the unit.
The pre-installed filter will not be used any more.

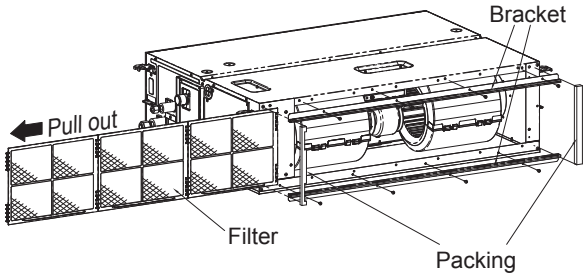

(2) Then remove the seal packing, bracket and filter attached to the side of the air intake port.

(3) Install the duct (field supply).
See the figure for the dimension of the installation hole.
Use M5 self-tapping screws for installation.

Unit: mm

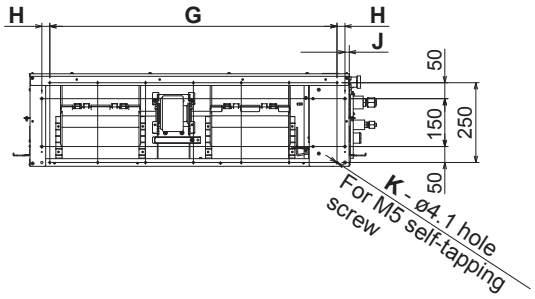

Type	G	H	J	K
50	600 (Pitch 150 × 4)	25	11.3	14
60, 71	900 (Pitch 150 × 6)	25	13	18
100, 125, 140	1,350 (Pitch 150 × 9)	0	13	24

NOTE

- Select an air-intake grille with a filter at a local shop.
- To get clean air and to extend the service life of the air conditioner, an air filter must be installed in the air intake. For installation and cleaning the air filter, consult your dealer or service center.

■ HOW TO PROCESS TUBING

Must ensure mechanical connections be accessible for maintenance purposes.

Connecting the Refrigerant Tubing

NOTE

When connecting flare at indoor side, make sure that the flare connection is used only once. If torqued up and released, the flare must be remade. Once the flare connection was torqued up correctly and leak test was made, thoroughly clean and dry the surface to remove oil, dirt and grease by following instructions of silicone sealant. Apply neutral cure & ammonia-free silicone sealant that is non-corrosive to copper & brass to the external of the flared connection to prevent the ingress of moisture on both the gas & liquid sides. (Moisture may cause freezing and premature failure of the connection.)

Use of the Flaring Method

Many of conventional split system air conditioners employ the flaring method to connect refrigerant tubes that run between indoor and outdoor units. In this method, the copper tubes are flared at each end and connected with flare nuts.

Flaring Procedure with a Flare Tool

(1) Cut the copper tube to the required length with a tube cutter. It is recommended to cut approx. 30 – 50 cm longer than the tubing length you estimate.

(2) Remove burrs at each end of the copper tubing with a tube reamer or a similar tool. This process is important and should be done carefully to make a good flare. Be sure to keep any contaminants (moisture, dirt, metal filings, etc.) from entering the tubing.

Deburring

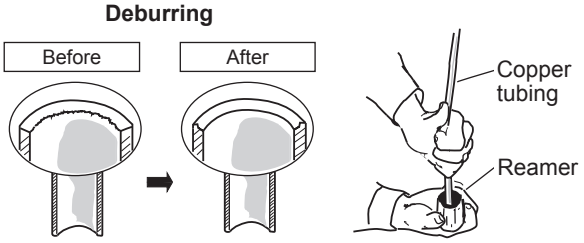

NOTE

When reaming, hold the tube end downward and be sure that no copper scraps fall into the tube.

(3) Remove the flare nut from the unit and be sure to mount it on the copper tube.

(4) Make a flare at the end of the copper tube with a flare tool.

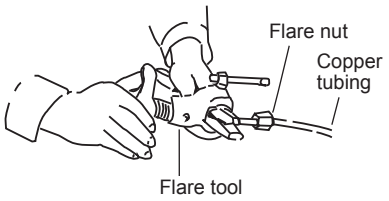

NOTE

When flared joints are reused, the flare part shall be re-fabricated.
A good flare should have the following characteristics:

- inside surface is glossy and smooth
- edge is smooth
- tapered sides are of uniform length

Caution Before Connecting Tubes Tightly

(1) Apply a sealing cap or water-proof tape to prevent dust or water from entering the tubes before they are used.

(2) Be sure to apply refrigerant lubricant (ether oil) to the inside of the flare nut before making piping connections. This is effective for reducing gas leaks.

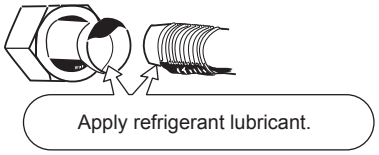

(3) For proper connection, align the union tube and flare tube straight with each other, then screw on the flare nut lightly at first to obtain a smooth match.

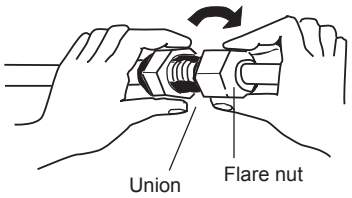

- Adjust the shape of the liquid tube using a tube bender at the installation site and connect it to the liquid tubing side valve using a flare.

Connecting Tubing Between Indoor and Outdoor Units

(1) Tightly connect the indoor-side refrigerant tubing extended from the wall with the outdoor-side tubing.

Indoor Unit Tubing Connection (ℓ_1, ℓ_2...ℓ_{n-1})

Indoor unit type	50	60	71	100	125	140
Gas tubing (mm)	ø12.7	ø15.88				
Liquid tubing (mm)	ø6.35	ø9.52				

(2) To fasten the flare nuts, apply specified torque.

- When removing the flare nuts from the tubing connections, or when tightening them after connecting the tubing, be sure to use a torque wrench and a spanner.
  If the flare nuts are over-tightened, the flare may be damaged, which could result in refrigerant leakage and cause injury or asphyxiation to room occupants.

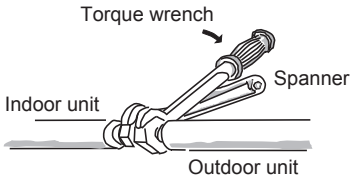

- For the flare nuts at tubing connections, be sure to use the flare nuts that were supplied with the unit, or else flare nuts for R410A, R32 (type 2). The refrigerant tubing that is used must be of the correct wall thickness as shown in the table below.

Tube diameter	Tightening torque (approximate)	Tube thickness
ø6.35 (1/4")	14 – 18 N · m {140 – 180 kgf · cm}	0.8 mm
ø9.52 (3/8")	34 – 42 N · m {340 – 420 kgf · cm}	0.8 mm
ø12.7 (1/2")	49 – 55 N · m {490 – 550 kgf · cm}	0.8 mm
ø15.88 (5/8")	68 – 82 N · m {680 – 820 kgf · cm}	1.0 mm

Because the pressure is approximately 1.6 times higher than conventional refrigerant R22 pressure, the use of ordinary flare nuts (type 1) or thin-walled tubes may result in tube rupture, injury, or asphyxiation caused by refrigerant leakage.

- In order to prevent damage to the flare caused by over-tightening of the flare nuts, use the table above as a guide when tightening.
- When tightening the flare nut on the liquid tube, use an adjustable wrench with a nominal handle length of 200 mm.

Insulating the Refrigerant Tubing

Tubing Insulation

Must ensure that pipe-work shall be protected from physical damage.

- Thermal insulation must be applied to all units tubing, including distribution joint (field supply).

  * For gas tubing, the insulation material must be heat resistant to 120°C or above. For other tubing, it must be heat resistant to 80°C or above.

  Insulation material thickness must be 10 mm or greater.

  If the conditions inside the ceiling exceed DB 30°C and RH 70%, increase the thickness of the gas tubing insulation material by 1 step.

Two tubes arranged together

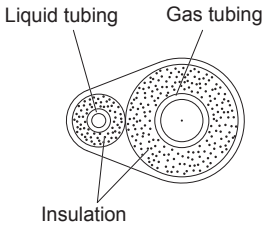

CAUTION

If the exterior of the outdoor unit valves has been finished with a square duct covering, make sure you allow sufficient space to access the valves and to allow the panels to be attached and removed.

Ensure to do the re-flaring of pipes before connecting to units to avoid leaking.

To prevent the ingress of moisture into the joint which could have the potential to freeze and then cause leakage, the joint must be sealed with suitable silicone and insulation material. The joint should be sealed on both liquid and gas side.

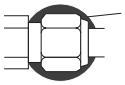

Insulation material and silicone sealant. Please ensure there are no gaps where moisture can enter the joint.

Silicone Sealant must be neutral cure and ammonia free. Use of silicon containing ammonia can lead to stress corrosion on the joint and cause leakage.

Taping the flare nuts

Wind the white insulating tape around the flare nuts at the gas tube connections. Then cover up the tubing connections with the flare insulator, and fill the gap at the union with the supplied black insulating tape. Finally, fasten the insulator at both ends with the supplied vinyl clamps.

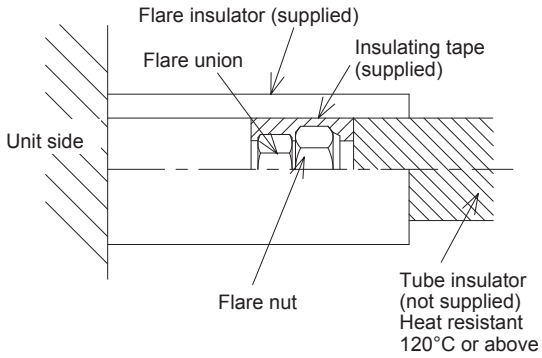

Insulation material

The material used for insulation must have good insulation characteristics, be easy to use, be age resistant, and must not easily absorb moisture.

CAUTION

After a tube has been insulated, never try to bend it into a narrow curve because it can cause the tube to break or crack.
Never grasp the drain or refrigerant connecting outlets when moving the unit.

Taping the Tubes

(1) At this time, the refrigerant tubes (and electrical wiring if local codes permit) should be taped together with armoring tape in 1 bundle. To prevent condensation from overflowing the drain pan, keep the drain hose separate from the refrigerant tubing.

(2) Wrap the armoring tape from the bottom of the outdoor unit to the top of the tubing where it enters the wall. As you wrap the tubing, overlap half of each previous tape turn.

(3) Clamp the tubing bundle to the wall, using 1 clamp approx. each meter.

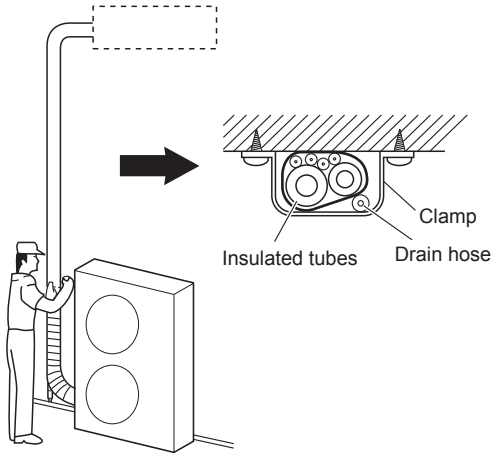

NOTE

Do not wind the armoring tape too tightly since this will decrease the heat insulation effect. Also ensure that the condensation drain hose splits away from the bundle and drips clear of the unit and the tubing.

Finishing the Installation

After finishing insulating and taping over the tubing, use sealing putty to seal off the hole in the wall to prevent rain and draft from entering.

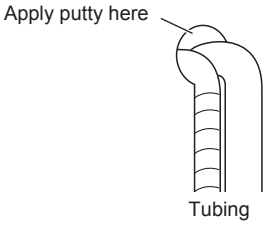

■ HOW TO INSTALL THE TIMER REMOTE CONTROLLER OR HIGH-SPEC WIRED REMOTE CONTROLLER (OPTIONAL PART)

NOTE

See “Section 2. TEST RUN”.

■ HOW TO INSTALL WIRELESS REMOTE CONTROLLER (OPTIONAL PART)

NOTE

See “Section 8. HOW TO INSTALL THE WIRESS REMOTE CONTROLLER RECEIVER”.

Accessories Supplied with Unit

Table 1-11-5 (Low Silhouette Ducted)

Part Name	Figure	Q’ty	Remarks
Washer		8	For suspending indoor unit from ceiling
Flare insulator		2	For gas and liquid tubes
Insulating tape		2	For gas and liquid tubes flare nuts
Drain insulator		1	For drain hose joint
Hose band		1	For securing drain hose
Packing		1	For drain hose joint (hard material)
Packing		1	For drain hose joint (soft material)
Drain hose		1	
Operating Instructions		1	
Installation Instructions		1	
Short-circuit connection		1	For high static pressure (Located on the back of the electrical component box lid.)

- Use M10 for suspension bolts.
- Suspension bolts and nuts are field supply.

Type of Copper Tube and Insulation Material

If you wish to purchase these materials separately from a local source, you will need:

1. Deoxidized annealed copper tube for refrigerant tubing.
2. Foamed polyethylene insulation for copper tubes as required to precise length of tubing. Wall thickness of the insulation should be not less than 8 mm.
3. Use insulated copper wire for field wiring. Wire size varies with the total length of wiring. See the section “1-10. Electrical Wiring” for details.

CAUTION

Check local electrical codes and regulations before obtaining wire. Also, check any specified instructions or limitations.

Additional Materials Required for Installation

1. Refrigeration (armored) tape
2. Insulated staples or clamps for connecting wire (See your local codes.)
3. Putty
4. Refrigeration tubing lubricant
5. Clamps or saddles to secure refrigerant tubing
6. Scale for weighing

■ CHECKLIST AFTER INSTALLATION WORK

Work List	No.	Content	Check ☑	Possibility of Failure & Checkpoint
Installation	1	Are the indoor units installed following the content of the section "■ SELECTING THE INSTALLATION SITE"? (on page 1-11-5-1)	☐	There is a possibility of light injure or loss of property.
Tubing & Wiring	2	In the case of multiple installation: Is there a wrong tubing connection with another system?	☐	The unit is inoperated or the refrigerant flows into the inoperative unit and the leakage is expected. Check if there is a wrong tubing or wiring connection with another system.
	3	In the case of multiple installation: Is there a wrong wiring connection with another system?	☐	
	4	Is the earth leakage circuit breaker (all-pole switching function provided) installed?	☐	Power failure or short circuit may cause electric shock or fire. Check installation work and ground wire work.
	5	Is there any wrong installation of optional parts or wrong wiring?	☐	
	6	Was the ground wire work performed?	☐	
	7	Are there any wrong power supply wiring, wrong connection wire, wrong signal wire or loose screw?	☐	
	8	Is the thickness of wire in accordance with rule?	☐	
	9	Is the power-supply voltage equal to the nameplate of the unit?	☐	
	10	Was the check of the airtight test, flared tube fitting and gas leakage on the welded portion performed?	☐	If the gas leakage occurs, the unit quality not only becomes inferior but affects environment. Repair it as quickly as possible.
Drain Check	11	Has the adhesive been applied to the drain connecting portion (resin portion) of the indoor unit?	☐	The resin portion cracks after a few months and it may cause water drain.
	12	Is there water leakage?	☐	Since there is a possibility of water drain, repair the drain pipe if the drain failure or water drain occurs.
	13	Indoor unit drain pipe has a downward gradient (1/100 or more) by rule. Is the drain water flowing smoothly?	☐	
Heat Insulation	14	Was the heat insulation work at a suitable location including the flared tube fitting (refrigerant tube & drain pipe) performed properly?	☐	The quality of unit not only becomes inferior but there is a possibility of the water drain. So, perform the heat insulation work properly.
Test Run	15	Did the abnormal sound occur?	☐	Check if there is a fan contact or distortion of the indoor unit.
	16	Did the cool and warm airflow discharge from the indoor unit?	☐	Check if the unit does not operate or there is a wrong tubing or wiring connection with another system.

■ APPENDIX

Care and Cleaning

WARNING

- **For safety, be sure to turn the air conditioner off and also to disconnect the power before cleaning.**
- **Do not pour water on the indoor unit to clean it. This will damage the internal components and cause an electric shock hazard.**

Air intake and outlet side (Indoor unit)

Clean the air intake and outlet side of the indoor unit with a vacuum cleaner brush, or wipe them with a clean, soft cloth.

If these parts are stained, use a clean cloth moistened with water. When cleaning the air outlet side, be careful not to force the vanes out of place.

CAUTION

- **Never use solvents or harsh chemicals when cleaning the indoor unit. Do not wipe plastic parts using very hot water.**
- **Some metal edges and the fins are sharp and may cause injury if handled improperly; be especially careful when you clean these parts.**

Air filter

- **In case of Using the Supplied Air Filter**

The air filter collects dust and other particles from the air and should be cleaned at regular intervals as indicated in the table below or when the filter indication (▦) on the display of the remote controller (wired type) shows that the filter needs cleaning. If the filter gets blocked, the efficiency of the air conditioner drops greatly.

Type	F1
Period	2 weeks

- **After Cleaning**

1. After the air filter is cleaned, reinstall it in its original position.

   Be sure to reinstall in reverse order.
2. [In the case of Timer Remote Controller]

   Press the Filter reset button.
   The ▦ (Filter) indicator on the display goes out.

   [In the case of High-spec Wired Remote Controller]

   Refer to the Operating Instructions attached to the optional High-spec Wired Remote Controller.

Timer Remote Controller

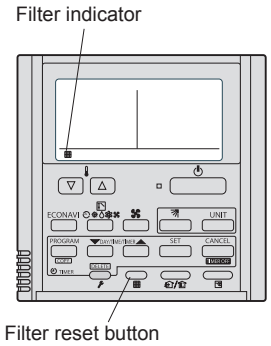

High-spec Wired Remote Controller

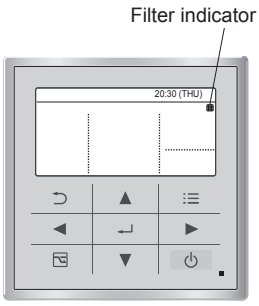

NOTE

The frequency with which the filter should be cleaned depends on the environment in which the unit is used.
Clean the filter frequently for best performance in the area of dusty or oil spots regardless of filter status.

<How to clean the filter>

Use a vacuum cleaner to remove light dust. If there is sticky dust on the filter, wash the filter in lukewarm, soapy water, rinse it in clean water, and dry it.

<How to remove the filter>

Pull out a filter in the direction of the electrical equipment box in the unit.

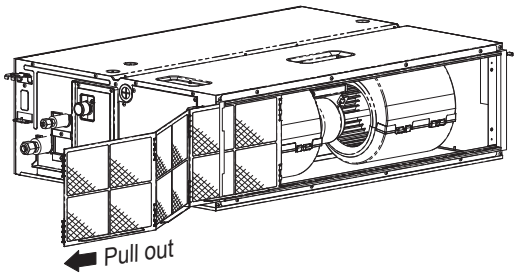

- **In case of Installing the Duct (field supply)**

Type	F1
Period	(Depends on filter's specifications)

When cleaning the air filter, consult your dealer or service center.

CAUTION

- **Certain metal edges and the condenser fins are sharp and may cause injury if handled improperly; special care should be taken when you clean these parts.**
- **The internal coil and other components must also be cleaned periodically. Consult your dealer or service center.**

Care: After a prolonged idle period

Check the indoor and outdoor unit air intakes and outlets for blockage; if there is a blockage, remove it.

Care: Before a prolonged idle period

- Operate the fan for half a day to dry out the inside.
- Disconnect the power supply and also turn off the circuit breaker.
- Clean the air filter and replace it in its original position.

Troubleshooting

If your air conditioner does not work properly, first check the following points before requesting service. If it still does not work properly, contact your dealer or a service center.

- **Indoor unit**

Symptom		Cause
Noise	Sound like streaming water during operation or after operation.	● Sound of refrigerant liquid flowing inside unit ● Sound of drainage water through drain pipe
	Cracking noise during operation or when operation stops.	Cracking sound due to temperature changes of parts
Odor	Discharged air is smelled during operation.	Indoor odor components, cigarette odor and cosmetic odor accumulated in the air conditioner and its air is discharged. Unit inside is dusty. Consult your dealer.
Dewdrop	Dewdrop gets accumurated near air discharge during operation.	Indoor moisture is cooled by cool wind and accumulated by dewdrop.
Fog	Fog occurs during operation in cooling mode. (Places where large amounts of oil mist exist at restaurants.)	● Cleaning is necessary because unit inside (heat exchanger) is dirty. Consult your dealer as technical engineering is required. ● During defrost operation
Fan is rotating for a while even though operation stops.		● Fan rotating makes operation smoothly. ● Fan may sometimes rotates because of drying heat exchanger due to settings.
Wind-direction changes while operating. Wind-direction setting cannot be made. Wind-direction cannot be changed.		● When air discharge temperature is low or during defrost operation, horizontal wind flow is made automatically. ● Flap position is occasionally set up individually.
When wind-direction is changed, flap operates several times and stops at designated position.		When wind-direction is changed, flap operates after searching for standard position.
Dust		Dust accumulation inside indoor unit is discharged.
At the initial high-speed operation, the fan may sometimes rotate faster (for 3 to 30 minutes) than the setting speed.		This is for operation check in order to confirm whether the fan motor rotation is within use range.

- **Check Before Requiring Services**

Symptom	Cause	Remedy
Air conditioner does not run at all although power is turned on.	Power failure or after power failure	Press ON/OFF operation button on remote controller again.
	Operation button is turned off.	● Switch on power if breaker is turned off. ● If breaker has been tripped, consult your dealer without turning it on.
	Fuse blow out.	If blown out, consult your dealer.
Poor cooling or heating performance.	Air intake or air discharge port of indoor and outdoor units is clogged with dust or obstacles.	Remove dust or obstruction.
	Fan speed switch is set to “Low”.	Change to “Medium” or “High”.
	Improper temperature settings	Refer to “Tips for Energy Saving” (on page 1-11-5-12).
	Room is exposed to direct sunlight in cooling mode.	
	Doors and /or windows are open.	
	Air filter is clogged.	Refer to “Care and Cleaning” (on page 1-11-5-10).
	Too much heat sources in room in cooling mode.	Use minimum heat sources and in a short time.
	Too many people in room in cooling mode.	Reduce temperature settings or change to “Medium” or “High”.

If your air conditioner still does not work properly although you checked the points as described above, first stop the operation and turn off the power switch. Then contact your dealer and report the serial number and symptom. Never repair your air conditioner by yourself since it is very dangerous for you to do so.

Tips for Energy Saving

Avoid

- **Do not block the air intake and outlet of the unit. If either is obstructed, the unit will not work well, and may be damaged.**
- Do not let direct sunlight into the room. Use sunshades, blinds or curtains. If the walls and ceiling of the room are warmed by the sun, it will take longer to cool the room.

Do

- Always try to keep the air filter clean. (Refer to “Care and Cleaning” on page 1-11-5-10.) A clogged filter will impair the performance of the unit.
- To prevent conditioned air from escaping, keep windows, doors and any other openings closed.

NOTE

Should the power fail while the unit is running

If the power supply for this unit is temporarily cut off, the unit will automatically resume operation once power is restored using the same settings before the power was interrupted.

IMPORTANT INFORMATION REGARDING THE REFRIGERANT USED

NOTE

See “■ Outdoor Unit” under the Section 1-11. Installation Instructions.

■ SERVICING

CAUTION

- Any qualified person who is involved with working on or breaking into a refrigerant circuit should hold a current valid certificate from an industry-accredited assessment authority, which authorizes their competence to handle refrigerants safely in accordance with an industry recognised assessment specification.
- Servicing shall only be performed as recommended by the equipment manufacturer. Maintenance and repair requiring the assistance of other skilled personnel shall be carried out under the supervision of the person competent in the use of flammable refrigerants.
- Servicing shall be performed only as recommended by the manufacturer.
- Prior to beginning work on systems containing flammable refrigerants, safety checks are necessary to ensure that the risk of ignition is minimised. For repair to the refrigerating system, (2) to (6) shall be completed prior to conducting work on the system.

(1) Work shall be undertaken under a controlled procedure so as to minimise the risk of a flammable gas or vapour being present while the work is being performed.

(2) All maintenance staff and others working in the local area shall be instructed on the nature of work being carried out. Work in confined spaces shall be avoided. The area around the workspace shall be sectioned off. Ensure that the conditions within the area have been made safe by control of flammable material.

(3) The area shall be checked with an appropriate refrigerant detector prior to and during work, to ensure the technician is aware of potentially toxic or flammable atmospheres. Ensure that the leak detection equipment being used is suitable for use with all applicable refrigerants, i.e. non-sparking, adequately sealed or intrinsically safe.

(4) If any hot work is to be conducted on the refrigeration equipment or any associated parts, appropriate fire extinguishing equipment shall be available to hand. Have a dry powder or CO_2 fire extinguisher adjacent to the charging area.

(5) No person carrying out work in relation to a refrigeration system which involves exposing any pipe work shall use any sources of ignition in such a manner that it may lead to the risk of fire or explosion. All possible ignition sources, including cigarette smoking, should be kept sufficiently far away from the site of installation, repairing, removing and disposal, during which refrigerant can possibly be released to the surrounding space. Prior to work taking place, the area around the equipment is to be surveyed to make sure that there are no flammable hazards or ignition risks. “No Smoking” signs shall be displayed.

(6) Ensure that the area is in the open or that it is adequately ventilated before breaking into the system or conducting any hot work. A degree of ventilation shall continue during the period that the work is carried out. The ventilation should safely disperse any released refrigerant and preferably expel it externally into the atmosphere.

(7) Where electrical components are being changed, they shall be fit for the purpose and to the correct specification. At all times the manufacturer’s maintenance and service guidelines shall be followed. If in doubt, consult the manufacturer’s technical department for assistance.
- The charge size is in accordance with the room size within which the refrigerant containing parts are installed.
- The ventilation machinery and outlets are operating adequately and are not obstructed.
- Marking to the equipment continues to be visible and legible. Markings and signs that are illegible shall be corrected.
- Refrigeration pipe or components are installed in a position where they are unlikely to be exposed to any substance which may corrode refrigerant containing components, unless the components are constructed of materials which are inherently resistant to being corroded or are suitably protected against being so corroded.

(8) Repair and maintenance to electrical components shall include initial safety checks and component inspection procedures. If a fault exists that could compromise safety, then no electrical supply shall be connected to the circuit until it is satisfactorily dealt with. If the fault cannot be corrected immediately but it is necessary to continue operation, an adequate temporary solution shall be used. This shall be reported to the owner of the equipment so all parties are advised.
Initial safety checks shall include:
• That no live electrical components and wiring are exposed while charging, recovering or purging the system.
• That there is continuity of earth bonding.

- During repairs to sealed components, all electrical supplies shall be disconnected from the equipment being worked upon prior to any removal of sealed covers, etc.
- Particular attention shall be paid to the following to ensure that by working on electrical components, the casing is not altered in such a way that the level of protection is affected. This shall include damage to cables, excessive number of connections, terminals not made to original specification, damage to seals, incorrect fitting of glands, etc.
- Ensure that apparatus is mounted securely.
- Ensure that seals or sealing materials have not degraded such that they no longer serve the purpose of preventing the ingress of flammable atmospheres.
- Replacement parts shall be in accordance with the manufacturer's specifications.

  NOTE:
  The use of silicon sealant may inhibit the effectiveness of some types of leak detection equipment. Intrinsically safe components do not have to be isolated prior to working on them.

- Do not apply any permanent inductive or capacitance loads to the circuit without ensuring that this will not exceed the permissible voltage and current permitted for the equipment in use.
- Intrinsically safe components are the only types that can be worked on while live in the presence of a flammable atmosphere.
- The test apparatus shall be at the correct rating.
- Replace components only with parts specified by the manufacturer. Unspecified parts by manufacturer may result ignition of refrigerant in the atmosphere from a leak.

■ REMOVAL AND EVACUATION

CAUTION

- When breaking into the refrigerant circuit to make repairs – or for any other purpose – conventional procedures shall be used. However, it is important that best practice is followed since flammability is a consideration.
  The following procedure shall be adhered to:
  • Remove refrigerant.
  • Purge the circuit with inert gas.
  • Evacuate.
  • Purge again with inert gas.
  • Open the circuit by cutting or brazing.
- The refrigerant charge shall be recovered into the correct recovery cylinders.
- The system shall be "flushed" with Oxygen free nitrogen (OFN) to render the unit safe.
- This process may need to be repeated several times.
- Compressed air or oxygen shall not be used for this task.
- Flushing shall be achieved by breaking the vacuum in the system with Oxygen free nitrogen (OFN) and continuing to fill until the working pressure is achieved, then venting to atmosphere, and finally pulling down to a vacuum.
- This process shall be repeated until no refrigerant is within the system.
- When the final Oxygen free nitrogen (OFN) charge is used, the system shall be vented down to atmospheric pressure to enable work to take place.
- This operation is absolutely vital if brazing operations on the pipe work are to take place.
- Ensure that the outlet for the vacuum pump is not close to any ignition sources and there is ventilation available.

■ CHARGING PROCEDURES

NOTE

See "■ Outdoor Unit" under the Section 1-11. Installation Instructions.

■ DECOMMISSIONING

CAUTION

- Before carrying out this procedure, it is essential that the technician is completely familiar with the equipment and all its details.
- It is recommended good practice that all refrigerants are recovered safely.
- Prior to the task being carried out, an oil and refrigerant sample shall be taken in case analysis is required prior to re-use of reclaimed refrigerant.

- It is essential that electrical power is available before the task is commenced.
  a) Become familiar with the equipment and its operation.
  b) Isolate system electrically.
  c) Before attempting the procedure ensure that:
     • Mechanical handling equipment is available, if required, for handling refrigerant cylinders.
     • All personal protective equipment is available and being used correctly.
     • The recovery process is supervised at all times by a competent person.
     • Recovery equipment and cylinders conform to the appropriate standards.
  d) Pump down refrigerant system, if possible.
  e) If a vacuum is not possible, make a manifold so that refrigerant can be removed from various parts of the system.
  f) Make sure that cylinder is situated on the scales before recovery takes place.
  g) Start the recovery machine and operate in accordance with manufacturer's instructions.
  h) Do not overfill cylinders. (No more than 80 % volume liquid charge).
  i) Do not exceed the maximum working pressure of the cylinder, even temporarily.
  j) When the cylinders have been filled correctly and the process completed, make sure that the cylinders and the equipment are removed from site promptly and all isolation valves on the equipment are closed off.
  k) Recovered refrigerant shall not be charged into another refrigeration system unless it has been cleaned and checked.
- Electrostatic charge may accumulate and create a hazardous condition when charging or discharging the refrigerant.
  To avoid fire or explosion, dissipate static electricity during transfer by grounding and bonding containers and equipment before charging / discharging.

■ RECOVERY

NOTE

See "12. Recovery" on page 1-11-1-6.

1-12. Capacity Table

1. Cooling Capacity Performance Data
U-100PZ2E5 (U-100PZ2E8)

TC :Cooling Capacity
SHC :Sensible Heat Capacity
IPT :Cooling Power Consumption

unit : kW

Model	Power Source	Ambient Return Air		Outdoor air intake temp(°C D.B.)														
				25°C			30°C			35°C			40°C			43°C		
		DB	WB	TC	SHC	IPT	TC	SHC	IPT	TC	SHC	IPT	TC	SHC	IPT	TC	SHC	IPT
S-50PU2E5B x2 U-100PZ2E5 (U-100PZ2E8)	220V-230V-240V 50Hz 1phase (380V-400V-415V 50Hz 3phase)	23	16	11.4	9.0	3.26	10.7	7.4	3.48	10.1	7.1	3.71	9.1	6.7	3.71	7.0	5.7	2.78
			19	12.2	6.7	3.40	11.4	5.2	3.63	10.7	4.9	3.87	9.8	4.5	3.87	7.5	3.7	2.90
			22	13.4	4.7	3.52	12.5	3.1	3.76	11.8	2.9	4.00	10.7	2.5	4.00	8.2	1.7	3.00
		25	16	11.8	10.4	3.31	11.1	10.1	3.54	10.4	9.8	3.77	9.5	9.4	3.77	7.3	7.3	2.83
			19	12.6	8.2	3.46	11.8	7.9	3.70	11.1	7.6	3.93	10.1	7.2	3.93	7.8	6.3	2.95
			22	13.9	6.2	3.58	13.0	5.8	3.82	12.2	5.5	4.07	11.1	5.2	4.07	8.5	4.3	3.05
		27	16	12.2	11.9	3.37	11.4	11.5	3.60	10.8	10.8	3.83	9.8	9.8	3.83	7.5	7.6	2.88
			19	13.1	9.7	3.51	12.2	9.3	3.76	11.5	9.0	4.00	10.5	8.6	4.00	8.1	7.7	3.00
			22	14.3	7.6	3.64	13.4	7.3	3.89	12.6	6.9	4.14	11.5	6.6	4.14	8.8	5.7	3.10
		29	16	12.4	12.5	3.38	11.6	11.7	3.61	10.9	11.0	3.84	9.9	10.0	3.84	7.6	7.7	2.88
			19	13.3	11.0	3.52	12.4	10.7	3.77	11.7	10.4	4.01	10.6	9.9	4.01	8.2	8.2	3.01
			22	14.5	8.9	3.64	13.6	8.6	3.90	12.8	8.3	4.15	11.6	7.9	4.15	9.0	6.9	3.11
		32	16	12.6	12.7	3.39	11.8	11.8	3.62	11.1	11.1	3.85	10.1	10.1	3.85	7.8	7.8	2.89
			19	13.5	13.0	3.53	12.6	12.6	3.78	11.8	11.9	4.02	10.8	10.8	4.02	8.3	8.3	3.01
			22	14.7	10.9	3.65	13.8	10.6	3.91	13.0	10.3	4.16	11.8	9.8	4.16	9.1	8.9	3.12
S-100PU2E5B U-100PZ2E5 (U-100PZ2E8)	220V-230V-240V 50Hz 1phase (380V-400V-415V 50Hz 3phase)	23	16	11.4	9.3	3.26	10.7	7.6	3.48	10.1	7.3	3.71	9.1	6.9	3.71	7.0	6.0	2.78
			19	12.2	6.9	3.40	11.4	5.2	3.63	10.7	5.0	3.87	9.8	4.6	3.87	7.5	3.8	2.90
			22	13.4	4.7	3.52	12.5	3.0	3.76	11.8	2.8	4.00	10.7	2.4	4.00	8.2	1.6	3.00
		25	16	11.8	10.9	3.31	11.1	10.5	3.54	10.4	10.2	3.77	9.5	9.5	3.77	7.3	7.3	2.83
			19	12.6	8.5	3.46	11.8	8.2	3.70	11.1	7.9	3.93	10.1	7.5	3.93	7.8	6.6	2.95
			22	13.9	6.3	3.58	13.0	5.9	3.82	12.2	5.7	4.07	11.1	5.3	4.07	8.5	4.4	3.05
		27	16	12.2	12.3	3.37	11.4	11.5	3.60	10.8	10.8	3.83	9.8	9.8	3.83	7.5	7.6	2.88
			19	13.1	10.1	3.51	12.2	9.7	3.76	11.5	9.4	4.00	10.5	9.0	4.00	8.1	8.1	3.00
			22	14.3	7.8	3.64	13.4	7.5	3.89	12.6	7.2	4.14	11.5	6.8	4.14	8.8	5.9	3.10
		29	16	12.4	12.5	3.38	11.6	11.7	3.61	10.9	11.0	3.84	9.9	10.0	3.84	7.6	7.7	2.88
			19	13.3	11.6	3.52	12.4	11.2	3.77	11.7	10.9	4.01	10.6	10.5	4.01	8.2	8.2	3.01
			22	14.5	9.3	3.64	13.6	8.9	3.90	12.8	8.6	4.15	11.6	8.2	4.15	9.0	7.3	3.11
		32	16	12.6	12.7	3.39	11.8	11.8	3.62	11.1	11.1	3.85	10.1	10.1	3.85	7.8	7.8	2.89
			19	13.5	13.5	3.53	12.6	12.7	3.78	11.8	11.9	4.02	10.8	10.8	4.02	8.3	8.3	3.01
			22	14.7	11.4	3.65	13.8	11.0	3.91	13.0	10.8	4.16	11.8	10.3	4.16	9.1	9.1	3.12
S-50PT2E5B x2 U-100PZ2E5 (U-100PZ2E8)	220V-230V-240V 50Hz 1phase (380V-400V-415V 50Hz 3phase)	23	16	11.4	8.5	3.34	10.7	7.1	3.57	10.1	6.7	3.80	9.1	6.4	3.80	7.0	5.5	2.85
			19	12.2	6.5	3.48	11.4	5.1	3.73	10.7	4.9	3.97	9.8	4.5	3.97	7.5	3.6	2.97
			22	13.4	4.7	3.60	12.5	3.3	3.85	11.8	3.1	4.10	10.7	2.7	4.10	8.2	1.9	3.08
		25	16	11.8	9.9	3.40	11.1	9.5	3.63	10.4	9.2	3.87	9.5	8.8	3.87	7.3	7.3	2.90
			19	12.6	7.9	3.54	11.8	7.5	3.79	11.1	7.4	4.03	10.1	6.8	4.03	7.8	5.9	3.02
			22	13.9	6.0	3.67	13.0	5.7	3.92	12.2	5.5	4.17	11.1	5.1	4.17	8.5	4.2	3.13
		27	16	12.2	11.2	3.45	11.4	10.8	3.69	10.8	10.5	3.93	9.8	9.8	3.93	7.5	7.6	2.95
			19	13.1	9.2	3.60	12.2	8.9	3.85	11.5	8.5	4.10	10.5	8.1	4.10	8.1	7.2	3.08
			22	14.3	7.3	3.73	13.4	7.1	3.98	12.6	6.7	4.24	11.5	6.2	4.24	8.8	5.3	3.18
		29	16	12.4	12.4	3.46	11.6	11.7	3.70	10.9	11.0	3.94	9.9	10.0	3.94	7.6	7.6	2.96
			19	13.3	10.5	3.61	12.4	10.1	3.86	11.7	9.7	4.11	10.6	9.3	4.11	8.2	8.2	3.08
			22	14.5	8.5	3.74	13.6	8.3	3.99	12.8	7.9	4.25	11.6	7.5	4.25	9.0	6.4	3.19
		32	16	12.6	12.7	3.47	11.8	11.8	3.71	11.1	11.1	3.95	10.1	10.1	3.95	7.8	7.8	2.96
			19	13.5	12.2	3.62	12.6	11.8	3.87	11.8	11.4	4.12	10.8	10.8	4.12	8.3	8.3	3.09
			22	14.7	10.3	3.74	13.8	9.9	4.00	13.0	9.6	4.26	11.8	9.2	4.26	9.1	8.2	3.20
S-100PT2E5B U-100PZ2E5 (U-100PZ2E8)	220V-230V-240V 50Hz 1phase (380V-400V-415V 50Hz 3phase)	23	16	11.4	8.6	3.34	10.7	7.1	3.57	10.1	6.8	3.80	9.1	6.4	3.80	7.0	5.5	2.85
			19	12.2	6.6	3.48	11.4	5.2	3.73	10.7	4.9	3.97	9.8	4.5	3.97	7.5	3.6	2.97
			22	13.4	4.8	3.60	12.5	3.4	3.85	11.8	3.1	4.10	10.7	2.7	4.10	8.2	1.9	3.08
		25	16	11.8	10.1	3.40	11.1	9.5	3.63	10.4	9.3	3.87	9.5	8.8	3.87	7.3	7.3	2.90
			19	12.6	7.9	3.54	11.8	7.6	3.79	11.1	7.4	4.03	10.1	6.8	4.03	7.8	5.9	3.02
			22	13.9	6.1	3.67	13.0	5.8	3.92	12.2	5.5	4.17	11.1	5.1	4.17	8.5	4.2	3.13
		27	16	12.2	11.3	3.45	11.4	10.9	3.69	10.8	10.6	3.93	9.8	9.8	3.93	7.5	7.6	2.95
			19	13.1	9.3	3.60	12.2	8.9	3.85	11.5	8.6	4.10	10.5	8.1	4.10	8.1	7.2	3.08
			22	14.3	7.4	3.73	13.4	7.1	3.98	12.6	6.8	4.24	11.5	6.3	4.24	8.8	5.4	3.18
		29	16	12.4	12.5	3.46	11.6	11.7	3.70	10.9	11.0	3.94	9.9	10.0	3.94	7.6	7.7	2.96
			19	13.3	10.6	3.61	12.4	10.1	3.86	11.7	9.8	4.11	10.6	9.3	4.11	8.2	8.2	3.08
			22	14.5	8.5	3.74	13.6	8.3	3.99	12.8	7.9	4.25	11.6	7.5	4.25	9.0	6.4	3.19
		32	16	12.6	12.7	3.47	11.8	11.8	3.71	11.1	11.1	3.95	10.1	10.1	3.95	7.8	7.8	2.96
			19	13.5	12.3	3.62	12.6	11.9	3.87	11.8	11.7	4.12	10.8	10.8	4.12	8.3	8.3	3.09
			22	14.7	10.4	3.74	13.8	10.0	4.00	13.0	9.6	4.26	11.8	9.2	4.26	9.1	8.2	3.20

1-12. Capacity Table

1. Cooling Capacity Performance Data
U-100PZ2E5 (U-100PZ2E8)

TC :Cooling Capacity
SHC :Sensible Heat Capacity
IPT :Cooling Power Consumption

unit : kW

Model	Power Source	Ambient Return Air		Outdoor air intake temp(°C D.B.)														
				25°C			30°C			35°C			40°C			43°C		
		DB	WB	TC	SHC	IPT	TC	SHC	IPT	TC	SHC	IPT	TC	SHC	IPT	TC	SHC	IPT
S-50PK2E5B x2 U-100PZ2E5 (U-100PZ2E8)	220V-230V-240V 50Hz 1phase (380V-400V-415V 50Hz 3phase)	23	16	10.9	8.3	3.26	10.2	6.8	3.48	9.6	6.5	3.71	8.7	6.1	3.71	6.7	5.1	2.78
			19	11.7	6.3	3.40	10.9	4.8	3.63	10.3	4.5	3.87	9.3	4.1	3.87	7.2	3.3	2.90
			22	12.8	4.3	3.52	12.0	2.9	3.76	11.3	2.6	4.00	10.2	2.2	4.00	7.9	1.5	3.00
		25	16	11.3	9.7	3.31	10.6	9.4	3.54	10.0	9.1	3.77	9.1	8.6	3.77	7.0	7.0	2.83
			19	12.1	7.6	3.46	11.3	7.3	3.70	10.6	7.0	3.93	9.7	6.5	3.93	7.4	5.6	2.95
			22	13.2	5.7	3.58	12.4	5.4	3.82	11.7	5.1	4.07	10.6	4.7	4.07	8.2	3.9	3.05
		27	16	11.7	11.1	3.37	10.9	10.7	3.60	10.3	10.3	3.83	9.4	9.4	3.83	7.2	7.2	2.88
			19	12.5	9.0	3.51	11.7	8.6	3.76	11.0	8.3	4.00	10.0	7.9	4.00	7.7	7.0	3.00
			22	13.7	7.0	3.64	12.8	6.7	3.89	12.1	6.4	4.14	11.0	6.0	4.14	8.4	5.0	3.10
		29	16	11.9	11.9	3.38	11.1	11.2	3.61	10.5	10.5	3.84	9.5	9.5	3.84	7.3	7.3	2.88
			19	12.7	10.3	3.52	11.9	9.9	3.77	11.2	9.6	4.01	10.1	9.2	4.01	7.8	7.8	3.01
			22	13.9	8.3	3.64	13.0	7.9	3.90	12.2	7.7	4.15	11.1	7.2	4.15	8.6	6.3	3.11
		32	16	12.1	12.1	3.39	11.3	11.3	3.62	10.6	10.7	3.85	9.6	9.7	3.85	7.4	7.5	2.89
			19	12.9	12.1	3.53	12.0	11.8	3.78	11.3	11.4	4.02	10.3	10.3	4.02	7.9	7.9	3.01
			22	14.1	10.1	3.65	13.2	9.8	3.91	12.4	9.5	4.16	11.3	9.1	4.16	8.7	8.1	3.12
S-100PK2E5B U-100PZ2E5 (U-100PZ2E8)	220V-230V-240V 50Hz 1phase (380V-400V-415V 50Hz 3phase)	23	16	9.6	6.8	2.53	9.0	5.6	2.70	8.5	5.3	2.87	7.7	4.9	2.87	5.9	4.2	2.16
			19	10.3	5.2	2.63	9.6	4.1	2.82	9.1	3.9	3.00	8.2	3.5	3.00	6.3	2.8	2.25
			22	11.3	3.9	2.73	10.6	2.8	2.91	9.9	2.5	3.10	9.0	2.2	3.10	7.0	1.8	2.33
		25	16	10.0	7.8	2.57	9.3	7.4	2.75	8.8	7.2	2.92	8.0	6.7	2.92	6.1	5.8	2.19
			19	10.7	6.3	2.68	10.0	5.9	2.86	9.4	5.7	3.05	8.5	5.3	3.05	6.6	4.4	2.29
			22	11.7	4.9	2.77	10.9	4.6	2.96	10.3	4.3	3.15	9.3	3.9	3.15	7.2	3.1	2.37
		27	16	10.3	8.8	2.61	9.7	8.4	2.79	9.1	8.1	2.97	8.3	7.7	2.97	6.4	6.4	2.23
			19	11.0	7.2	2.72	10.3	6.9	2.91	9.7	6.6	3.10	8.8	6.2	3.10	6.8	5.4	2.33
			22	12.1	5.8	2.82	11.3	5.5	3.01	10.6	5.3	3.21	9.7	4.8	3.21	7.4	4.1	2.41
		29	16	10.5	9.6	2.62	9.8	9.4	2.80	9.2	9.1	2.98	8.4	8.4	2.98	6.5	6.5	2.23
			19	11.2	8.2	2.73	10.5	7.8	2.92	9.8	7.5	3.11	8.9	7.1	3.11	6.9	6.3	2.33
			22	12.3	7.1	2.82	11.5	6.4	3.02	10.8	6.1	3.22	9.8	5.8	3.22	7.6	5.0	2.41
		32	16	10.6	10.7	2.62	9.9	10.0	2.81	9.4	9.4	2.99	8.5	8.5	2.99	6.5	6.6	2.24
			19	11.4	9.5	2.74	10.6	9.1	2.93	10.0	8.8	3.12	9.1	8.4	3.12	7.0	7.0	2.34
			22	12.4	8.1	2.83	11.6	7.7	3.03	10.9	7.4	3.22	10.0	7.1	3.22	7.7	6.1	2.42
S-50PF1E5B x2 U-100PZ2E5 (U-100PZ2E8)	220V-230V-240V 50Hz 1phase (380V-400V-415V 50Hz 3phase)	23	16	11.4	8.9	3.33	10.7	7.4	3.56	10.1	7.0	3.79	9.1	6.6	3.79	7.0	5.7	2.84
			19	12.2	6.7	3.48	11.4	5.2	3.72	10.7	4.9	3.96	9.8	4.5	3.96	7.5	3.7	2.97
			22	13.4	4.8	3.60	12.5	3.2	3.84	11.8	2.9	4.09	10.7	2.6	4.09	8.2	1.7	3.07
		25	16	11.8	10.3	3.39	11.1	10.0	3.62	10.4	9.7	3.86	9.5	9.2	3.86	7.3	7.3	2.89
			19	12.6	8.1	3.53	11.8	7.8	3.78	11.1	7.6	4.02	10.1	7.1	4.02	7.8	6.2	3.02
			22	13.9	6.2	3.66	13.0	5.8	3.91	12.2	5.5	4.16	11.1	5.1	4.16	8.5	4.3	3.12
		27	16	12.2	11.7	3.44	11.4	11.4	3.68	10.8	10.8	3.92	9.8	9.8	3.92	7.5	7.6	2.94
			19	13.1	9.6	3.59	12.2	9.2	3.84	11.5	8.9	4.09	10.5	8.5	4.09	8.1	7.5	3.07
			22	14.3	7.6	3.72	13.4	7.2	3.97	12.6	6.9	4.23	11.5	6.5	4.23	8.8	5.5	3.17
		29	16	12.4	12.5	3.45	11.6	11.7	3.69	10.9	11.0	3.93	9.9	10.0	3.93	7.6	7.7	2.95
			19	13.3	10.9	3.60	12.4	10.5	3.85	11.7	10.2	4.10	10.6	9.8	4.10	8.2	8.2	3.08
			22	14.5	8.9	3.73	13.6	8.5	3.98	12.8	8.2	4.24	11.6	7.8	4.24	9.0	6.8	3.18
		32	16	12.6	12.7	3.46	11.8	11.8	3.70	11.1	11.1	3.94	10.1	10.1	3.94	7.8	7.8	2.96
			19	13.5	12.9	3.61	12.6	12.5	3.86	11.8	11.9	4.11	10.8	10.8	4.11	8.3	8.3	3.08
			22	14.7	10.8	3.74	13.8	10.4	3.99	13.0	10.1	4.25	11.8	9.7	4.25	9.1	8.7	3.19
S-100PF1E5B U-100PZ2E5 (U-100PZ2E8)	220V-230V-240V 50Hz 1phase (380V-400V-415V 50Hz 3phase)	23	16	11.4	8.9	3.33	10.7	7.3	3.56	10.1	7.0	3.79	9.1	6.6	3.79	7.0	5.8	2.84
			19	12.2	6.7	3.48	11.4	5.1	3.72	10.7	4.8	3.96	9.8	4.5	3.96	7.5	3.6	2.97
			22	13.4	4.7	3.60	12.5	3.1	3.84	11.8	2.8	4.09	10.7	2.5	4.09	8.2	1.6	3.07
		25	16	11.8	10.4	3.39	11.1	10.0	3.62	10.4	9.8	3.86	9.5	9.3	3.86	7.3	7.3	2.89
			19	12.6	8.2	3.53	11.8	7.8	3.78	11.1	7.5	4.02	10.1	7.2	4.02	7.8	6.2	3.02
			22	13.9	6.1	3.66	13.0	5.8	3.91	12.2	5.5	4.16	11.1	5.1	4.16	8.5	4.2	3.12
		27	16	12.2	11.9	3.44	11.4	11.4	3.68	10.8	10.8	3.92	9.8	9.8	3.92	7.5	7.5	2.94
			19	13.1	9.6	3.59	12.2	9.3	3.84	11.5	9.0	4.09	10.5	8.5	4.09	8.1	7.7	3.07
			22	14.3	7.6	3.72	13.4	7.2	3.97	12.6	6.9	4.23	11.5	6.5	4.23	8.8	5.6	3.17
		29	16	12.4	12.4	3.45	11.6	11.6	3.69	10.9	10.9	3.93	9.9	9.9	3.93	7.6	7.6	2.95
			19	13.3	11.0	3.60	12.4	10.6	3.85	11.7	10.3	4.10	10.6	9.9	4.10	8.2	8.2	3.08
			22	14.5	8.9	3.73	13.6	8.6	3.98	12.8	8.2	4.24	11.6	7.8	4.24	9.0	7.0	3.18
		32	16	12.6	12.6	3.46	11.8	11.8	3.70	11.1	11.1	3.94	10.1	10.1	3.94	7.8	7.8	2.96
			19	13.5	13.0	3.61	12.6	12.6	3.86	11.8	11.8	4.11	10.8	10.8	4.11	8.3	8.3	3.08
			22	14.7	10.9	3.74	13.8	10.5	3.99	13.0	10.2	4.25	11.8	9.7	4.25	9.1	8.8	3.19

1-12. Capacity Table

1. Cooling Capacity Performance Data
U-125PZ2E5 (U-125PZ2E8)

TC :Cooling Capacity
SHC :Sensible Heat Capacity
IPT :Cooling Power Consumption

unit : kW

Model	Power Source	Ambient Return Air		Outdoor air intake temp(°C D.B.)														
				25°C			30°C			35°C			40°C			43°C		
		DB	WB	TC	SHC	IPT	TC	SHC	IPT	TC	SHC	IPT	TC	SHC	IPT	TC	SHC	IPT
S-60PU2E5B x2 U-125PZ2E5 (U-125PZ2E8)	220V-230V-240V 50Hz 1phase (380V-400V-415V 50Hz 3phase)	23	16	13.4	10.9	3.91	12.6	8.9	4.18	11.8	8.6	4.45	10.7	8.1	4.45	8.3	7.0	3.34
			19	14.3	8.1	4.08	13.4	6.2	4.36	12.6	5.8	4.64	11.5	5.4	4.64	8.8	4.4	3.48
			22	15.7	5.5	4.22	14.7	3.6	4.51	13.8	3.3	4.80	12.6	2.8	4.80	9.7	1.9	3.60
		25	16	13.9	12.8	3.98	13.0	12.3	4.25	12.2	12.0	4.53	11.1	11.2	4.53	8.6	8.6	3.39
			19	14.8	10.0	4.15	13.9	9.6	4.43	13.1	9.2	4.72	11.9	8.8	4.72	9.1	7.6	3.54
			22	16.3	7.3	4.29	15.2	7.0	4.59	14.3	6.6	4.88	13.0	6.2	4.88	10.0	5.2	3.66
		27	16	14.4	14.4	4.04	13.4	13.5	4.32	12.6	12.7	4.60	11.5	11.5	4.60	8.8	8.9	3.45
			19	15.3	11.8	4.22	14.4	11.4	4.51	13.5	11.0	4.80	12.3	10.5	4.80	9.5	9.5	3.60
			22	16.8	9.2	4.36	15.7	8.8	4.66	14.8	8.4	4.97	13.4	7.9	4.97	10.4	6.9	3.72
		29	16	14.6	14.6	4.05	13.6	13.7	4.33	12.8	12.9	4.61	11.7	11.7	4.61	9.0	9.0	3.46
			19	15.6	13.5	4.23	14.6	13.1	4.52	13.7	12.8	4.81	12.5	12.3	4.81	9.6	9.6	3.61
			22	17.1	10.9	4.37	16.0	10.4	4.68	15.0	10.1	4.98	13.6	9.6	4.98	10.5	8.5	3.73
		32	16	14.8	14.9	4.06	13.8	13.9	4.34	13.0	13.1	4.62	11.8	11.9	4.62	9.1	9.1	3.47
			19	15.8	15.9	4.24	14.8	14.8	4.53	13.9	14.0	4.82	12.6	12.7	4.82	9.7	9.8	3.62
			22	17.3	13.4	4.38	16.2	12.9	4.69	15.2	12.6	4.99	13.8	12.1	4.99	10.7	10.7	3.74
S-125PU2E5B U-125PZ2E5 (U-125PZ2E8)	220V-230V-240V 50Hz 1phase (380V-400V-415V 50Hz 3phase)	23	16	13.4	10.2	3.91	12.6	8.4	4.18	11.8	8.2	4.45	10.7	7.7	4.45	8.3	6.6	3.34
			19	14.3	7.7	4.08	13.4	5.9	4.36	12.6	5.6	4.64	11.5	5.3	4.64	8.8	4.3	3.48
			22	15.7	5.5	4.22	14.7	3.8	4.51	13.8	3.5	4.80	12.6	2.9	4.80	9.7	2.0	3.60
		25	16	13.9	12.0	3.98	13.0	11.5	4.25	12.2	11.2	4.53	11.1	10.6	4.53	8.6	8.6	3.39
			19	14.8	9.4	4.15	13.9	9.1	4.43	13.1	8.6	4.72	11.9	8.2	4.72	9.1	7.1	3.54
			22	16.3	7.2	4.29	15.2	6.8	4.59	14.3	6.5	4.88	13.0	6.0	4.88	10.0	5.0	3.66
		27	16	14.4	13.6	4.04	13.4	13.3	4.32	12.6	12.7	4.60	11.5	11.5	4.60	8.8	8.9	3.45
			19	15.3	11.2	4.22	14.4	10.6	4.51	13.5	10.4	4.80	12.3	9.8	4.80	9.5	8.8	3.60
			22	16.8	8.8	4.36	15.7	8.4	4.66	14.8	8.1	4.97	13.4	7.6	4.97	10.4	6.5	3.72
		29	16	14.6	14.7	4.05	13.6	13.7	4.33	12.8	12.9	4.61	11.7	11.7	4.61	9.0	9.0	3.46
			19	15.6	12.7	4.23	14.6	12.1	4.52	13.7	11.9	4.81	12.5	11.4	4.81	9.6	9.6	3.61
			22	17.1	10.2	4.37	16.0	9.9	4.68	15.0	9.6	4.98	13.6	8.9	4.98	10.5	8.0	3.73
		32	16	14.8	14.9	4.06	13.8	13.9	4.34	13.0	13.1	4.62	11.8	11.9	4.62	9.1	9.2	3.47
			19	15.8	14.9	4.24	14.8	14.5	4.53	13.9	13.9	4.82	12.6	12.7	4.82	9.7	9.8	3.62
			22	17.3	12.5	4.38	16.2	12.2	4.69	15.2	11.8	4.99	13.8	11.2	4.99	10.7	10.1	3.74
S-60PT2E5B x2 U-125PZ2E5 (U-125PZ2E8)	220V-230V-240V 50Hz 1phase (380V-400V-415V 50Hz 3phase)	23	16	13.4	10.5	3.98	12.6	8.6	4.25	11.8	8.3	4.53	10.7	7.8	4.53	8.3	6.7	3.39
			19	14.3	7.9	4.15	13.4	6.1	4.43	12.6	5.8	4.72	11.5	5.3	4.72	8.8	4.3	3.54
			22	15.7	5.6	4.29	14.7	3.7	4.59	13.8	3.4	4.88	12.6	2.8	4.88	9.7	2.0	3.66
		25	16	13.9	12.2	4.04	13.0	11.8	4.32	12.2	11.4	4.60	11.1	10.9	4.60	8.6	8.6	3.45
			19	14.8	9.6	4.22	13.9	9.2	4.51	13.1	8.9	4.80	11.9	8.4	4.80	9.1	7.2	3.60
			22	16.3	7.2	4.36	15.2	6.8	4.66	14.3	6.5	4.97	13.0	6.1	4.97	10.0	5.0	3.72
		27	16	14.4	13.9	4.11	13.4	13.5	4.39	12.6	12.7	4.68	11.5	11.5	4.68	8.8	8.9	3.51
			19	15.3	11.3	4.29	14.4	10.9	4.58	13.5	10.5	4.88	12.3	10.1	4.88	9.5	9.0	3.66
			22	16.8	8.9	4.44	15.7	8.5	4.74	14.8	8.1	5.05	13.4	7.6	5.05	10.4	6.6	3.79
		29	16	14.6	14.6	4.12	13.6	13.7	4.40	12.8	12.9	4.69	11.7	11.7	4.69	9.0	9.0	3.52
			19	15.6	12.9	4.30	14.6	12.5	4.59	13.7	12.1	4.89	12.5	11.6	4.89	9.6	9.6	3.67
			22	17.1	10.5	4.45	16.0	10.1	4.75	15.0	9.7	5.06	13.6	9.2	5.06	10.5	8.1	3.80
		32	16	14.8	14.9	4.13	13.8	13.9	4.42	13.0	13.1	4.70	11.8	11.9	4.70	9.1	9.2	3.53
			19	15.8	15.2	4.31	14.8	14.8	4.61	13.9	14.0	4.90	12.6	12.7	4.90	9.7	9.8	3.68
			22	17.3	12.8	4.46	16.2	12.3	4.77	15.2	12.0	5.07	13.8	11.4	5.07	10.7	10.3	3.81
S-125PT2E5B U-125PZ2E5 (U-125PZ2E8)	220V-230V-240V 50Hz 1phase (380V-400V-415V 50Hz 3phase)	23	16	13.4	9.9	3.98	12.6	8.2	4.25	11.8	7.8	4.53	10.7	7.3	4.53	8.3	6.2	3.39
			19	14.3	7.7	4.15	13.4	6.0	4.43	12.6	5.7	4.72	11.5	5.2	4.72	8.8	4.2	3.54
			22	15.7	5.6	4.29	14.7	4.0	4.59	13.8	3.7	4.88	12.6	3.2	4.88	9.7	2.2	3.66
		25	16	13.9	11.4	4.04	13.0	10.9	4.32	12.2	10.6	4.60	11.1	10.0	4.60	8.6	8.6	3.45
			19	14.8	9.2	4.22	13.9	8.7	4.51	13.1	8.4	4.80	11.9	7.9	4.80	9.1	6.7	3.60
			22	16.3	7.1	4.36	15.2	6.6	4.66	14.3	6.3	4.97	13.0	5.9	4.97	10.0	4.8	3.72
		27	16	14.4	13.0	4.11	13.4	12.4	4.39	12.6	12.0	4.68	11.5	11.5	4.68	8.8	8.9	3.51
			19	15.3	10.5	4.29	14.4	10.2	4.58	13.5	9.8	4.88	12.3	9.3	4.88	9.5	8.2	3.66
			22	16.8	8.5	4.44	15.7	8.1	4.74	14.8	7.8	5.05	13.4	7.3	5.05	10.4	6.1	3.79
		29	16	14.6	14.3	4.12	13.6	13.7	4.40	12.8	12.9	4.69	11.7	11.7	4.69	9.0	9.0	3.52
			19	15.6	12.0	4.30	14.6	11.5	4.59	13.7	11.2	4.89	12.5	10.6	4.89	9.6	9.5	3.67
			22	17.1	9.9	4.45	16.0	9.5	4.75	15.0	9.1	5.06	13.6	8.6	5.06	10.5	7.4	3.80
		32	16	14.8	14.9	4.13	13.8	13.9	4.42	13.0	13.1	4.70	11.8	11.9	4.70	9.1	9.2	3.53
			19	15.8	14.0	4.31	14.8	13.6	4.61	13.9	13.1	4.90	12.6	12.6	4.90	9.7	9.8	3.68
			22	17.3	11.9	4.46	16.2	11.4	4.77	15.2	11.1	5.07	13.8	10.5	5.07	10.7	9.3	3.81

1-12. Capacity Table

1. Cooling Capacity Performance Data
U-125PZ2E5 (U-125PZ2E8)

TC :Cooling Capacity
SHC :Sensible Heat Capacity
IPT :Cooling Power Consumption

unit : kW

Model	Power Source	Ambient Return Air		Outdoor air intake temp(°C D.B.)														
				25°C			30°C			35°C			40°C			43°C		
		DB	WB	TC	SHC	IPT	TC	SHC	IPT	TC	SHC	IPT	TC	SHC	IPT	TC	SHC	IPT
S-60PK2E5B x2 U-125PZ2E5 (U-125PZ2E8)	220V-230V-240V 50Hz 1phase (380V-400V-415V 50Hz 3phase)	23	16	13.1	10.1	3.91	12.3	8.3	4.18	11.5	7.9	4.45	10.5	7.5	4.45	8.1	6.4	3.34
			19	14.0	7.4	4.08	13.1	5.7	4.36	12.3	5.4	4.64	11.2	5.0	4.64	8.6	4.0	3.48
			22	15.4	5.2	4.22	14.4	3.4	4.51	13.5	3.0	4.80	12.3	2.6	4.80	9.5	1.7	3.60
		25	16	13.6	11.9	3.98	12.7	11.5	4.25	12.0	11.1	4.53	10.9	10.6	4.53	8.4	8.4	3.39
			19	14.5	9.2	4.15	13.6	8.9	4.43	12.8	8.6	4.72	11.6	8.1	4.72	8.9	7.0	3.54
			22	15.9	6.9	4.29	14.9	6.5	4.59	14.0	6.2	4.88	12.7	5.7	4.88	9.8	4.7	3.66
		27	16	14.0	13.6	4.04	13.1	13.1	4.32	12.4	12.4	4.60	11.2	11.3	4.60	8.7	8.7	3.45
			19	15.0	10.9	4.22	14.0	10.5	4.51	13.2	10.2	4.80	12.0	9.7	4.80	9.2	8.6	3.60
			22	16.4	8.5	4.36	15.4	8.1	4.66	14.5	7.8	4.97	13.1	7.3	4.97	10.1	6.3	3.72
		29	16	14.3	14.3	4.05	13.3	13.4	4.33	12.5	12.6	4.61	11.4	11.4	4.61	8.8	8.8	3.46
			19	15.2	12.5	4.23	14.2	12.0	4.52	13.4	11.7	4.81	12.2	11.2	4.81	9.4	9.4	3.61
			22	16.7	9.9	4.37	15.6	9.7	4.68	14.7	9.3	4.98	13.3	8.9	4.98	10.3	7.7	3.73
		32	16	14.5	14.5	4.06	13.5	13.6	4.34	12.7	12.8	4.62	11.6	11.6	4.62	8.9	8.9	3.47
			19	15.4	14.9	4.24	14.4	14.4	4.53	13.6	13.6	4.82	12.4	12.4	4.82	9.5	9.6	3.62
			22	16.9	12.4	4.38	15.8	12.0	4.69	14.9	11.6	4.99	13.5	11.1	4.99	10.4	10.0	3.74
S-60PF1E5B x2 U-125PZ2E5 (U-125PZ2E8)	220V-230V-240V 50Hz 1phase (380V-400V-415V 50Hz 3phase)	23	16	13.4	10.9	3.93	12.6	8.9	4.20	11.8	8.6	4.47	10.7	8.1	4.47	8.3	7.0	3.35
			19	14.3	8.1	4.10	13.4	6.2	4.38	12.6	5.8	4.66	11.5	5.4	4.66	8.8	4.4	3.50
			22	15.7	5.5	4.24	14.7	3.6	4.53	13.8	3.3	4.82	12.6	2.8	4.82	9.7	1.9	3.62
		25	16	13.9	12.8	3.99	13.0	12.3	4.27	12.2	12.0	4.55	11.1	11.2	4.55	8.6	8.6	3.41
			19	14.8	9.9	4.17	13.9	9.6	4.45	13.1	9.2	4.74	11.9	8.8	4.74	9.1	7.6	3.56
			22	16.3	7.3	4.31	15.2	7.0	4.61	14.3	6.6	4.91	13.0	6.2	4.91	10.0	5.2	3.68
		27	16	14.4	14.4	4.06	13.4	13.5	4.34	12.6	12.7	4.62	11.5	11.5	4.62	8.8	8.9	3.47
			19	15.3	11.8	4.23	14.4	11.4	4.53	13.5	11.0	4.82	12.3	10.5	4.82	9.5	9.5	3.62
			22	16.8	9.2	4.38	15.7	8.8	4.68	14.8	8.4	4.99	13.4	7.9	4.99	10.4	6.9	3.74
		29	16	14.6	14.6	4.07	13.6	13.7	4.35	12.8	12.9	4.63	11.7	11.7	4.63	9.0	9.0	3.47
			19	15.6	13.5	4.24	14.6	13.1	4.54	13.7	12.8	4.83	12.5	12.3	4.83	9.6	9.6	3.62
			22	17.1	10.9	4.39	16.0	10.4	4.70	15.0	10.1	5.00	13.6	9.6	5.00	10.5	8.5	3.75
		32	16	14.8	14.9	4.08	13.8	13.9	4.36	13.0	13.1	4.64	11.8	11.9	4.64	9.1	9.1	3.48
			19	15.8	15.9	4.26	14.8	14.8	4.55	13.9	14.0	4.84	12.6	12.7	4.84	9.7	9.8	3.63
			22	17.3	13.4	4.40	16.2	12.9	4.71	15.2	12.6	5.01	13.8	12.1	5.01	10.7	10.7	3.76
S-125PF1E5B x2 U-125PZ2E5 (U-125PZ2E8)	220V-230V-240V 50Hz 1phase (380V-400V-415V 50Hz 3phase)	23	16	13.4	10.1	3.93	12.6	8.3	4.20	11.8	8.0	4.47	10.7	7.4	4.47	8.3	6.3	3.35
			19	14.3	7.7	4.10	13.4	6.0	4.38	12.6	5.7	4.66	11.5	5.2	4.66	8.8	4.2	3.50
			22	15.7	5.6	4.24	14.7	3.8	4.53	13.8	3.5	4.82	12.6	3.0	4.82	9.7	2.0	3.62
		25	16	13.9	11.7	3.99	13.0	11.2	4.27	12.2	10.9	4.55	11.1	10.4	4.55	8.6	8.6	3.41
			19	14.8	9.3	4.17	13.9	8.9	4.45	13.1	8.5	4.74	11.9	8.0	4.74	9.1	7.0	3.56
			22	16.3	7.1	4.31	15.2	6.7	4.61	14.3	6.4	4.91	13.0	5.9	4.91	10.0	4.8	3.68
		27	16	14.4	13.3	4.06	13.4	12.8	4.34	12.6	12.5	4.62	11.5	11.5	4.62	8.8	8.8	3.47
			19	15.3	10.9	4.23	14.4	10.4	4.53	13.5	10.1	4.82	12.3	9.6	4.82	9.5	8.6	3.62
			22	16.8	8.7	4.38	15.7	8.2	4.68	14.8	7.9	4.99	13.4	7.3	4.99	10.4	6.3	3.74
		29	16	14.6	14.6	4.07	13.6	13.7	4.35	12.8	12.8	4.63	11.7	11.7	4.63	9.0	9.0	3.47
			19	15.6	12.3	4.24	14.6	11.9	4.54	13.7	11.5	4.83	12.5	11.0	4.83	9.6	9.6	3.62
			22	17.1	10.1	4.39	16.0	9.7	4.70	15.0	9.3	5.00	13.6	8.8	5.00	10.5	7.7	3.75
		32	16	14.8	14.8	4.08	13.8	13.8	4.36	13.0	13.0	4.64	11.8	11.8	4.64	9.1	9.1	3.48
			19	15.8	14.5	4.26	14.8	14.0	4.55	13.9	13.7	4.84	12.6	12.6	4.84	9.7	9.7	3.63
			22	17.3	12.2	4.40	16.2	11.8	4.71	15.2	11.4	5.01	13.8	10.9	5.01	10.7	9.7	3.76

1-12. Capacity Table

1. Cooling Capacity Performance Data
U-140PZ2E5 (U-140PZ2E8)

TC :Cooling Capacity
SHC :Sensible Heat Capacity
IPT :Cooling Power Consumption

unit : kW

Model	Power Source	Ambient Return Air		Outdoor air intake temp(°C D.B.)														
				25°C			30°C			35°C			40°C			43°C		
		DB	WB	TC	SHC	IPT	TC	SHC	IPT	TC	SHC	IPT	TC	SHC	IPT	TC	SHC	IPT
S-71PU2E5B x2 U-140PZ2E5 (U-140PZ2E8)	220V-230V-240V 50Hz 1phase (380V-400V-415V 50Hz 3phase)	23	16	14.9	11.8	4.48	13.9	9.7	4.79	13.1	9.3	5.10	11.9	8.8	5.10	9.2	7.6	3.83
			19	15.9	8.9	4.67	14.9	6.8	5.00	14.0	6.4	5.32	12.7	5.9	5.32	9.8	4.8	3.99
			22	17.5	6.2	4.84	16.3	4.1	5.17	15.4	3.7	5.50	14.0	3.3	5.50	10.7	2.2	4.13
		25	16	15.4	13.8	4.56	14.4	13.3	4.87	13.6	12.9	5.19	12.3	12.4	5.19	9.5	9.6	3.89
			19	16.5	10.8	4.75	15.4	10.4	5.08	14.5	10.0	5.41	13.2	9.5	5.41	10.2	8.3	4.06
			22	18.1	8.1	4.92	16.9	7.6	5.26	15.9	7.1	5.60	14.4	6.8	5.60	11.1	5.6	4.20
		27	16	16.0	15.7	4.63	14.9	15.0	4.95	14.0	14.1	5.27	12.8	12.8	5.27	9.8	9.8	3.95
			19	17.0	12.7	4.83	15.9	12.3	5.17	15.0	11.9	5.50	13.6	11.4	5.50	10.5	10.0	4.13
			22	18.7	10.0	5.00	17.5	9.5	5.34	16.4	9.2	5.69	14.9	8.6	5.69	11.5	7.3	4.27
		29	16	16.2	16.3	4.64	15.2	15.2	4.96	14.3	14.3	5.29	13.0	13.0	5.29	10.0	10.0	3.96
			19	17.3	14.6	4.84	16.2	14.1	5.18	15.2	13.7	5.51	13.8	13.1	5.51	10.7	10.7	4.14
			22	19.0	11.8	5.01	17.7	11.4	5.36	16.7	10.9	5.70	15.2	10.2	5.70	11.7	9.2	4.28
		32	16	16.4	16.5	4.65	15.4	15.4	4.98	14.5	14.5	5.30	13.1	13.2	5.30	10.1	10.1	3.97
			19	17.6	17.2	4.86	16.4	16.5	5.19	15.4	15.5	5.53	14.0	14.1	5.53	10.8	10.8	4.15
			22	19.2	14.5	5.02	18.0	14.0	5.37	16.9	13.5	5.72	15.4	13.0	5.72	11.8	11.7	4.29
S-140PU2E5B U-140PZ2E5 (U-140PZ2E8)	220V-230V-240V 50Hz 1phase (380V-400V-415V 50Hz 3phase)	23	16	14.9	11.0	4.48	13.9	9.2	4.79	13.1	8.8	5.10	11.9	8.3	5.10	9.2	7.1	3.83
			19	15.9	8.6	4.67	14.9	6.7	5.00	14.0	6.3	5.32	12.7	5.8	5.32	9.8	4.7	3.99
			22	17.5	6.2	4.84	16.3	4.4	5.17	15.4	4.0	5.50	14.0	3.5	5.50	10.7	2.2	4.13
		25	16	15.4	12.8	4.56	14.4	12.4	4.87	13.6	11.9	5.19	12.3	11.5	5.19	9.5	9.5	3.89
			19	16.5	10.2	4.75	15.4	9.7	5.08	14.5	9.3	5.41	13.2	8.9	5.41	10.2	7.7	4.06
			22	18.1	7.8	4.92	16.9	7.5	5.26	15.9	7.1	5.60	14.4	6.4	5.60	11.1	5.4	4.20
		27	16	16.0	14.5	4.63	14.9	14.0	4.95	14.0	13.6	5.27	12.8	12.8	5.27	9.8	9.9	3.95
			19	17.0	11.9	4.83	15.9	11.6	5.17	15.0	11.0	5.50	13.6	10.4	5.50	10.5	9.3	4.13
			22	18.7	9.5	5.00	17.5	9.2	5.34	16.4	8.8	5.69	14.9	8.2	5.69	11.5	7.0	4.27
		29	16	16.2	16.2	4.64	15.2	15.2	4.96	14.3	14.3	5.29	13.0	13.0	5.29	10.0	10.0	3.96
			19	17.3	13.7	4.84	16.2	13.0	5.18	15.2	12.6	5.51	13.8	12.1	5.51	10.7	10.7	4.14
			22	19.0	11.2	5.01	17.7	10.6	5.36	16.7	10.3	5.70	15.2	9.6	5.70	11.7	8.5	4.28
		32	16	16.4	16.5	4.65	15.4	15.4	4.98	14.5	14.5	5.30	13.1	13.2	5.30	10.1	10.2	3.97
			19	17.6	15.8	4.86	16.4	15.5	5.19	15.4	15.0	5.53	14.0	14.1	5.53	10.8	10.9	4.15
			22	19.2	13.4	5.02	18.0	13.0	5.37	16.9	12.6	5.72	15.4	11.9	5.72	11.8	10.6	4.29
S-71PT2E5B x2 U-140PZ2E5 (U-140PZ2E8)	220V-230V-240V 50Hz 1phase (380V-400V-415V 50Hz 3phase)	23	16	14.9	11.4	4.48	13.9	9.4	4.79	13.1	8.9	5.10	11.9	8.5	5.10	9.2	7.2	3.83
			19	15.9	8.7	4.67	14.9	6.7	5.00	14.0	6.4	5.32	12.7	5.8	5.32	9.8	4.7	3.99
			22	17.5	6.2	4.84	16.3	4.3	5.17	15.4	3.9	5.50	14.0	3.3	5.50	10.7	2.3	4.13
		25	16	15.4	13.2	4.56	14.4	12.6	4.87	13.6	12.2	5.19	12.3	11.8	5.19	9.5	9.5	3.89
			19	16.5	10.3	4.75	15.4	10.0	5.08	14.5	9.7	5.41	13.2	9.0	5.41	10.2	7.8	4.06
			22	18.1	7.8	4.92	16.9	7.6	5.26	15.9	7.1	5.60	14.4	6.6	5.60	11.1	5.5	4.20
		27	16	16.0	14.9	4.63	14.9	14.4	4.95	14.0	14.0	5.27	12.8	12.8	5.27	9.8	9.8	3.95
			19	17.0	12.3	4.83	15.9	11.7	5.17	15.0	11.3	5.50	13.6	10.7	5.50	10.5	9.6	4.13
			22	18.7	9.8	5.00	17.5	9.2	5.34	16.4	8.9	5.69	14.9	8.3	5.69	11.5	7.1	4.27
		29	16	16.2	16.2	4.64	15.2	15.2	4.96	14.3	14.3	5.29	13.0	13.0	5.29	10.0	10.0	3.96
			19	17.3	14.0	4.84	16.2	13.3	5.18	15.2	13.1	5.51	13.8	12.5	5.51	10.7	10.7	4.14
			22	19.0	11.4	5.01	17.7	10.8	5.36	16.7	10.6	5.70	15.2	9.8	5.70	11.7	8.7	4.28
		32	16	16.4	16.5	4.65	15.4	15.4	4.98	14.5	14.5	5.30	13.1	13.2	5.30	10.1	10.1	3.97
			19	17.6	16.5	4.86	16.4	15.9	5.19	15.4	15.4	5.53	14.0	14.1	5.53	10.8	10.8	4.15
			22	19.2	13.8	5.02	18.0	13.4	5.37	16.9	13.0	5.72	15.4	12.3	5.72	11.8	11.1	4.29
S-140PT2E5B U-140PZ2E5 (U-140PZ2E8)	220V-230V-240V 50Hz 1phase (380V-400V-415V 50Hz 3phase)	23	16	14.9	10.6	4.48	13.9	8.9	4.79	13.1	8.4	5.10	11.9	8.0	5.10	9.2	6.7	3.83
			19	15.9	8.4	4.67	14.9	6.6	5.00	14.0	6.3	5.32	12.7	5.7	5.32	9.8	4.5	3.99
			22	17.5	6.3	4.84	16.3	4.5	5.17	15.4	4.2	5.50	14.0	3.7	5.50	10.7	2.5	4.13
		25	16	15.4	12.2	4.56	14.4	11.7	4.87	13.6	11.4	5.19	12.3	10.8	5.19	9.5	9.5	3.89
			19	16.5	10.0	4.75	15.4	9.5	5.08	14.5	9.0	5.41	13.2	8.4	5.41	10.2	7.2	4.06
			22	18.1	7.8	4.92	16.9	7.4	5.26	15.9	6.9	5.60	14.4	6.4	5.60	11.1	5.2	4.20
		27	16	16.0	13.9	4.63	14.9	13.4	4.95	14.0	12.8	5.27	12.8	12.3	5.27	9.8	9.9	3.95
			19	17.0	11.4	4.83	15.9	10.9	5.17	15.0	10.5	5.50	13.6	10.0	5.50	10.5	8.7	4.13
			22	18.7	9.4	5.00	17.5	8.8	5.34	16.4	8.5	5.69	14.9	7.9	5.69	11.5	6.6	4.27
		29	16	16.2	15.4	4.64	15.2	14.7	4.96	14.3	14.2	5.29	13.0	13.0	5.29	10.0	10.0	3.96
			19	17.3	12.9	4.84	16.2	12.3	5.18	15.2	11.9	5.51	13.8	11.4	5.51	10.7	9.9	4.14
			22	19.0	10.8	5.01	17.7	10.3	5.36	16.7	9.7	5.70	15.2	9.3	5.70	11.7	7.9	4.28
		32	16	16.4	16.5	4.65	15.4	15.4	4.98	14.5	14.5	5.30	13.1	13.2	5.30	10.1	10.2	3.97
			19	17.6	14.9	4.86	16.4	14.4	5.19	15.4	14.0	5.53	14.0	13.4	5.53	10.8	10.9	4.15
			22	19.2	12.7	5.02	18.0	12.3	5.37	16.9	11.8	5.72	15.4	11.2	5.72	11.8	9.9	4.29

1-12. Capacity Table

1. Cooling Capacity Performance Data
U-140PZ2E5 (U-140PZ2E8)

TC :Cooling Capacity
SHC :Sensible Heat Capacity
IPT :Cooling Power Consumption

unit : kW

Model	Power Source	Ambient Return Air		Outdoor air intake temp(°C D.B.)														
				25°C			30°C			35°C			40°C			43°C		
		DB	WB	TC	SHC	IPT	TC	SHC	IPT	TC	SHC	IPT	TC	SHC	IPT	TC	SHC	IPT
S-71PK2E5B x2 U-140PZ2E5 (U-140PZ2E8)	220V-230V-240V 50Hz 1phase (380V-400V-415V 50Hz 3phase)	23	16	14.9	10.9	4.56	13.9	9.1	4.88	13.1	8.7	5.19	11.9	8.1	5.19	9.2	6.9	3.90
			19	15.9	8.3	4.76	14.9	6.5	5.09	14.0	6.1	5.42	12.7	5.5	5.42	9.8	4.4	4.06
			22	17.5	6.0	4.92	16.3	4.1	5.26	15.4	3.6	5.60	14.0	3.2	5.60	10.7	2.1	4.20
		25	16	15.4	12.6	4.64	14.4	12.3	4.96	13.6	11.7	5.28	12.3	11.3	5.28	9.5	9.5	3.96
			19	16.5	10.0	4.84	15.4	9.5	5.17	14.5	9.1	5.51	13.2	8.7	5.51	10.2	7.4	4.13
			22	18.1	7.5	5.01	16.9	7.2	5.35	15.9	6.9	5.70	14.4	6.3	5.70	11.1	5.1	4.27
		27	16	16.0	14.4	4.72	14.9	13.9	5.04	14.0	13.5	5.37	12.8	12.8	5.37	9.8	9.9	4.03
			19	17.0	11.9	4.92	15.9	11.4	5.26	15.0	10.9	5.60	13.6	10.2	5.60	10.5	9.0	4.20
			22	18.7	9.4	5.09	17.5	8.9	5.44	16.4	8.5	5.79	14.9	8.0	5.79	11.5	6.7	4.35
		29	16	16.2	16.1	4.73	15.2	15.1	5.05	14.3	14.3	5.38	13.0	13.0	5.38	10.0	10.0	4.04
			19	17.3	13.5	4.93	16.2	12.9	5.27	15.2	12.4	5.61	13.8	11.9	5.61	10.7	10.7	4.21
			22	19.0	11.0	5.10	17.7	10.4	5.45	16.7	9.9	5.81	15.2	9.4	5.81	11.7	8.2	4.36
		32	16	16.4	16.5	4.74	15.4	15.4	5.07	14.5	14.5	5.40	13.1	13.2	5.40	10.1	10.1	4.05
			19	17.6	15.7	4.94	16.4	15.2	5.29	15.4	14.9	5.63	14.0	14.0	5.63	10.8	10.9	4.22
			22	19.2	13.2	5.11	18.0	12.7	5.47	16.9	12.4	5.82	15.4	11.8	5.82	11.8	10.5	4.37
S-71PF1E5B x2 U-140PZ2E5 (U-140PZ2E8)	220V-230V-240V 50Hz 1phase (380V-400V-415V 50Hz 3phase)	23	16	14.9	11.6	4.53	13.9	9.5	4.84	13.1	9.1	5.16	11.9	8.6	5.16	9.2	7.4	3.87
			19	15.9	8.8	4.73	14.9	6.7	5.05	14.0	6.4	5.38	12.7	5.7	5.38	9.8	4.8	4.03
			22	17.5	6.2	4.89	16.3	4.0	5.23	15.4	3.8	5.56	14.0	3.3	5.56	10.7	2.2	4.17
		25	16	15.4	13.5	4.61	14.4	13.0	4.92	13.6	12.6	5.24	12.3	12.1	5.24	9.5	9.5	3.93
			19	16.5	10.6	4.80	15.4	10.1	5.14	14.5	9.7	5.47	13.2	9.3	5.47	10.2	8.1	4.10
			22	18.1	8.0	4.97	16.9	7.6	5.31	15.9	7.2	5.66	14.4	6.7	5.66	11.1	5.6	4.24
		27	16	16.0	15.2	4.68	14.9	14.8	5.01	14.0	14.0	5.33	12.8	12.8	5.33	9.8	9.8	4.00
			19	17.0	12.5	4.88	15.9	12.0	5.22	15.0	11.7	5.56	13.6	10.9	5.56	10.5	9.9	4.17
			22	18.7	9.9	5.05	17.5	9.3	5.40	16.4	9.0	5.75	14.9	8.5	5.75	11.5	7.3	4.31
		29	16	16.2	16.3	4.69	15.2	15.2	5.02	14.3	14.3	5.34	13.0	13.0	5.34	10.0	10.0	4.01
			19	17.3	14.3	4.90	16.2	13.8	5.24	15.2	13.2	5.57	13.8	12.8	5.57	10.7	10.7	4.18
			22	19.0	11.5	5.07	17.7	11.0	5.42	16.7	10.8	5.77	15.2	10.0	5.77	11.7	8.9	4.32
		32	16	16.4	16.5	4.71	15.4	15.4	5.03	14.5	14.5	5.36	13.1	13.2	5.36	10.1	10.1	4.02
			19	17.6	16.7	4.91	16.4	16.2	5.25	15.4	15.4	5.59	14.0	14.1	5.59	10.8	10.8	4.19
			22	19.2	14.1	5.08	18.0	13.5	5.43	16.9	13.3	5.78	15.4	12.6	5.78	11.8	11.4	4.34
S-140PF1E5B U-140PZ2E5 (U-140PZ2E8)	220V-230V-240V 50Hz 1phase (380V-400V-415V 50Hz 3phase)	23	16	14.9	10.8	4.53	13.9	8.9	4.84	13.1	8.5	5.16	11.9	7.9	5.16	9.2	6.7	3.87
			19	15.9	8.3	4.73	14.9	6.5	5.05	14.0	6.1	5.38	12.7	5.6	5.38	9.8	4.4	4.03
			22	17.5	6.0	4.89	16.3	4.2	5.23	15.4	3.9	5.56	14.0	3.3	5.56	10.7	2.2	4.17
		25	16	15.4	12.5	4.61	14.4	12.0	4.92	13.6	11.6	5.24	12.3	10.9	5.24	9.5	9.5	3.93
			19	16.5	10.0	4.80	15.4	9.5	5.14	14.5	9.1	5.47	13.2	8.5	5.47	10.2	7.3	4.10
			22	18.1	7.7	4.97	16.9	7.2	5.31	15.9	6.8	5.66	14.4	6.3	5.66	11.1	5.1	4.24
		27	16	16.0	14.1	4.68	14.9	13.6	5.01	14.0	13.2	5.33	12.8	12.5	5.33	9.8	9.8	4.00
			19	17.0	11.6	4.88	15.9	11.1	5.22	15.0	10.8	5.56	13.6	10.1	5.56	10.5	8.8	4.17
			22	18.7	9.3	5.05	17.5	8.8	5.40	16.4	8.4	5.75	14.9	7.9	5.75	11.5	6.6	4.31
		29	16	16.2	15.7	4.69	15.2	15.2	5.02	14.3	14.2	5.34	13.0	12.9	5.34	10.0	10.0	4.01
			19	17.3	13.2	4.90	16.2	12.6	5.24	15.2	12.2	5.57	13.8	11.6	5.57	10.7	10.3	4.18
			22	19.0	10.8	5.07	17.7	10.3	5.42	16.7	9.9	5.77	15.2	9.3	5.77	11.7	8.0	4.32
		32	16	16.4	16.4	4.71	15.4	15.3	5.03	14.5	14.4	5.36	13.1	13.1	5.36	10.1	10.1	4.02
			19	17.6	15.3	4.91	16.4	14.9	5.25	15.4	14.4	5.59	14.0	13.8	5.59	10.8	10.8	4.19
			22	19.2	13.0	5.08	18.0	12.5	5.43	16.9	12.1	5.78	15.4	11.5	5.78	11.8	10.1	4.34

1-12. Capacity Table

2. Heating Capacity Performance Data
U-100PZ2E5 (U-100PZ2E8)

TC :Heating Capacity
IPT :Heating Power Consumption

unit : kW

Model	Power Source	Ambient Return Air	Outdoor air intake temp(°C W.B.)									
			-16°C		-8°C		6°C		8°C		15°C	
		DB	TC	IPT	TC	IPT	TC	IPT	TC	IPT	TC	IPT
S-50PU2E5B x2 U-100PZ2E5 (U-100PZ2E8)	220V-230V-240V 50Hz 1phase (380V-400V-415V 50Hz 3phase)	16	8.0	4.24	12.7	4.63	15.1	3.68	16.0	3.75	18.0	3.69
		20	7.4	4.49	11.8	4.90	14.0	3.90	14.9	3.97	16.7	3.91
		24	6.9	4.56	11.0	4.98	13.1	3.96	13.9	4.04	15.6	3.97
S-100PU2E5B U-100PZ2E5 (U-100PZ2E8)	220V-230V-240V 50Hz 1phase (380V-400V-415V 50Hz 3phase)	16	8.0	4.24	12.7	4.63	15.1	3.68	16.0	3.75	18.0	3.69
		20	7.4	4.49	11.8	4.90	14.0	3.90	14.9	3.97	16.7	3.91
		24	6.9	4.56	11.0	4.98	13.1	3.96	13.9	4.04	15.6	3.97
S-50PT2E5B x2 U-100PZ2E5 (U-100PZ2E8)	220V-230V-240V 50Hz 1phase (380V-400V-415V 50Hz 3phase)	16	8.0	4.35	12.7	4.75	15.1	3.78	16.0	3.85	18.0	3.79
		20	7.4	4.60	11.8	5.03	14.0	4.00	14.9	4.08	16.7	4.01
		24	6.9	4.67	11.0	5.11	13.1	4.06	13.9	4.14	15.6	4.08
S-100PT2E5B U-100PZ2E5 (U-100PZ2E8)	220V-230V-240V 50Hz 1phase (380V-400V-415V 50Hz 3phase)	16	8.0	4.35	12.7	4.75	15.1	3.78	16.0	3.85	18.0	3.79
		20	7.4	4.60	11.8	5.03	14.0	4.00	14.9	4.08	16.7	4.01
		24	6.9	4.67	11.0	5.11	13.1	4.06	13.9	4.14	15.6	4.08
S-50PK2E5B x2 U-100PZ2E5 (U-100PZ2E8)	220V-230V-240V 50Hz 1phase (380V-400V-415V 50Hz 3phase)	16	7.1	4.24	11.2	4.63	13.4	3.68	14.2	3.75	16.0	3.69
		20	6.6	4.49	10.4	4.90	12.4	3.90	13.2	3.97	14.8	3.91
		24	6.2	4.56	9.8	4.98	11.6	3.96	12.3	4.04	13.9	3.97
S-100PK2E5B U-100PZ2E5 (U-100PZ2E8)	220V-230V-240V 50Hz 1phase (380V-400V-415V 50Hz 3phase)	16	6.0	3.21	9.5	3.50	11.3	2.79	12.0	2.84	13.5	2.79
		20	5.6	3.39	8.8	3.71	10.5	2.95	11.1	3.01	12.5	2.96
		24	5.2	3.45	8.3	3.77	9.8	3.00	10.4	3.05	11.7	3.01
S-50PF1E5B x2 U-100PZ2E5 (U-100PZ2E8)	220V-230V-240V 50Hz 1phase (380V-400V-415V 50Hz 3phase)	16	8.0	4.34	12.7	4.74	15.1	3.77	16.0	3.84	18.0	3.78
		20	7.4	4.59	11.8	5.02	14.0	3.99	14.9	4.07	16.7	4.00
		24	6.9	4.66	11.0	5.10	13.1	4.05	13.9	4.13	15.6	4.07
S-100PF1E5B U-100PZ2E5 (U-100PZ2E8)	220V-230V-240V 50Hz 1phase (380V-400V-415V 50Hz 3phase)	16	8.0	4.34	12.7	4.74	15.1	3.77	16.0	3.84	18.0	3.78
		20	7.4	4.59	11.8	5.02	14.0	3.99	14.9	4.07	16.7	4.00
		24	6.9	4.66	11.0	5.10	13.1	4.05	13.9	4.13	15.6	4.07

1-12. Capacity Table

2. Heating Capacity Performance Data
U-125PZ2E5 (U-125PZ2E8)

TC :Heating Capacity
IPT :Heating Power Consumption

unit : kW

Model	Power Source	Ambient Return Air	Outdoor air intake temp(°C W.B.)									
			-16°C		-8°C		6°C		8°C		15°C	
		DB	TC	IPT	TC	IPT	TC	IPT	TC	IPT	TC	IPT
S-60PU2E5B x2 U-125PZ2E5 (U-125PZ2E8)	220V-230V-240V 50Hz 1phase (380V-400V-415V 50Hz 3phase)	16	10.2	5.24	15.7	6.17	16.2	3.97	17.2	4.08	19.3	3.98
		20	9.5	5.54	14.5	6.53	15.0	4.20	15.9	4.32	17.9	4.21
		24	8.8	5.63	13.6	6.64	14.0	4.27	14.9	4.39	16.8	4.28
S-125PU2E5B U-125PZ2E5 (U-125PZ2E8)	220V-230V-240V 50Hz 1phase (380V-400V-415V 50Hz 3phase)	16	10.2	5.24	15.7	6.17	16.2	3.97	17.2	4.08	19.3	3.98
		20	9.5	5.54	14.5	6.53	15.0	4.20	15.9	4.32	17.9	4.21
		24	8.8	5.63	13.6	6.64	14.0	4.27	14.9	4.39	16.8	4.28
S-60PT2E5B x2 U-125PZ2E5 (U-125PZ2E8)	220V-230V-240V 50Hz 1phase (380V-400V-415V 50Hz 3phase)	16	10.2	5.49	15.7	6.46	16.2	4.16	17.2	4.28	19.3	4.17
		20	9.5	5.81	14.5	6.84	15.0	4.40	15.9	4.53	17.9	4.41
		24	8.8	5.90	13.6	6.95	14.0	4.47	14.9	4.60	16.8	4.48
S-125PT2E5B U-125PZ2E5 (U-125PZ2E8)	220V-230V-240V 50Hz 1phase (380V-400V-415V 50Hz 3phase)	16	10.2	5.49	15.7	6.46	16.2	4.16	17.2	4.28	19.3	4.17
		20	9.5	5.81	14.5	6.84	15.0	4.40	15.9	4.53	17.9	4.41
		24	8.8	5.90	13.6	6.95	14.0	4.47	14.9	4.60	16.8	4.48
S-60PK2E5B x2 U-125PZ2E5 (U-125PZ2E8)	220V-230V-240V 50Hz 1phase (380V-400V-415V 50Hz 3phase)	16	10.2	5.74	15.7	6.76	16.2	4.35	17.2	4.47	19.3	4.36
		20	9.5	6.07	14.5	7.15	15.0	4.60	15.9	4.73	17.9	4.61
		24	8.8	6.17	13.6	7.27	14.0	4.67	14.9	4.81	16.8	4.69
S-60PF1E5B x2 U-125PZ2E5 (U-125PZ2E8)	220V-230V-240V 50Hz 1phase (380V-400V-415V 50Hz 3phase)	16	10.2	5.43	15.7	6.39	16.2	4.11	17.2	4.23	19.3	4.12
		20	9.5	5.74	14.5	6.76	15.0	4.35	15.9	4.48	17.9	4.36
		24	8.8	5.84	13.6	6.87	14.0	4.42	14.9	4.55	16.8	4.43
S-125PF1E5B U-125PZ2E5 (U-125PZ2E8)	220V-230V-240V 50Hz 1phase (380V-400V-415V 50Hz 3phase)	16	10.2	5.43	15.7	6.39	16.2	4.11	17.2	4.23	19.3	4.12
		20	9.5	5.74	14.5	6.76	15.0	4.35	15.9	4.48	17.9	4.36
		24	8.8	5.84	13.6	6.87	14.0	4.42	14.9	4.55	16.8	4.43

1-12. Capacity Table

2. Heating Capacity Performance Data
U-140PZ2E5 (U-140PZ2E8)

TC :Heating Capacity
IPT :Heating Power Consumption

unit : kW

Model	Power Source	Ambient Return Air	Outdoor air intake temp(°C W.B.)									
			-16°C		-8°C		6°C		8°C		15°C	
		DB	TC	IPT	TC	IPT	TC	IPT	TC	IPT	TC	IPT
S-71PU2E5B x2 U-140PZ2E5 (U-140PZ2E8)	220V-230V-240V 50Hz 1phase (380V-400V-415V 50Hz 3phase)	16	10.5	5.44	15.8	6.32	17.3	4.54	18.2	4.62	20.6	4.55
		20	9.8	5.76	14.7	6.69	16.0	4.80	16.8	4.89	19.1	4.81
		24	9.1	5.85	13.7	6.80	15.0	4.88	15.7	4.97	17.9	4.89
S-140PU2E5B U-140PZ2E5 (U-140PZ2E8)	220V-230V-240V 50Hz 1phase (380V-400V-415V 50Hz 3phase)	16	10.5	5.44	15.8	6.32	17.3	4.54	18.2	4.62	20.6	4.55
		20	9.8	5.76	14.7	6.69	16.0	4.80	16.8	4.89	19.1	4.81
		24	9.1	5.85	13.7	6.80	15.0	4.88	15.7	4.97	17.9	4.89
S-71PT2E5B x2 U-140PZ2E5 (U-140PZ2E8)	220V-230V-240V 50Hz 1phase (380V-400V-415V 50Hz 3phase)	16	10.5	5.90	15.8	6.85	17.3	4.91	18.2	5.01	20.6	4.93
		20	9.8	6.24	14.7	7.25	16.0	5.20	16.8	5.30	19.1	5.21
		24	9.1	6.34	13.7	7.37	15.0	5.28	15.7	5.38	17.9	5.30
S-140PT2E5B U-140PZ2E5 (U-140PZ2E8)	220V-230V-240V 50Hz 1phase (380V-400V-415V 50Hz 3phase)	16	10.5	5.90	15.8	6.85	17.3	4.91	18.2	5.01	20.6	4.93
		20	9.8	6.24	14.7	7.25	16.0	5.20	16.8	5.30	19.1	5.21
		24	9.1	6.34	13.7	7.37	15.0	5.28	15.7	5.38	17.9	5.30
S-71PK2E5B x2 U-140PZ2E5 (U-140PZ2E8)	220V-230V-240V 50Hz 1phase (380V-400V-415V 50Hz 3phase)	16	10.5	5.67	15.8	6.58	17.3	4.72	18.2	4.81	20.6	4.74
		20	9.8	6.00	14.7	6.97	16.0	5.00	16.8	5.09	19.1	5.01
		24	9.1	6.10	13.7	7.08	15.0	5.08	15.7	5.18	17.9	5.09
S-71PF1E5B x2 U-140PZ2E5 (U-140PZ2E8)	220V-230V-240V 50Hz 1phase (380V-400V-415V 50Hz 3phase)	16	10.5	5.80	15.8	6.74	17.3	4.84	18.2	4.93	20.6	4.85
		20	9.8	6.14	14.7	7.14	16.0	5.12	16.8	5.22	19.1	5.13
		24	9.1	6.24	13.7	7.25	15.0	5.20	15.7	5.30	17.9	5.22
S-140PF1E5B U-140PZ2E5 (U-140PZ2E8)	220V-230V-240V 50Hz 1phase (380V-400V-415V 50Hz 3phase)	16	10.5	5.80	15.8	6.74	17.3	4.84	18.2	4.93	20.6	4.85
		20	9.8	6.14	14.7	7.14	16.0	5.12	16.8	5.22	19.1	5.13
		24	9.1	6.24	13.7	7.25	15.0	5.20	15.7	5.30	17.9	5.22

1-13. Product Fiche

U-100PZ2E5

ENERGY ЕНЕРГИЯ · ΕΝΕΡΓΕΙΑ · ENERGIJA · ENERGIA · ENERGIE

Panasonic

Model name		SEER						SCOP																
								Warmer					Average							Colder				
Indoor Unit	Outdoor Unit	A ～ G	kW	SEER	*2 kWh/annum	dB	dB	A ～ G	kW	SCOP	*2 kWh/annum	elbu (2℃) kW	A ～ G	kW	SCOP	*2 kWh/annum	dB	dB	elbu (-10℃) kW	A ～ G	kW	SCOP	*2 kWh/annum	elbu (-22℃) kW
S-100PU2E5B	U-100PZ2E5	A++	10.0	6.8	515	60	70	–	×	×	×	×	A+	10.0	4.4	3182	60	70	0.00	–	×	×	×	×
S-50PU2E5B ×2	U-100PZ2E5	A++	10.0	6.8	515	47	70	–	×	×	×	×	A+	10.0	4.4	3182	47	70	0.00	–	×	×	×	×
S-100PF1E5B	U-100PZ2E5	A+	10.0	5.6	625	60	70	–	×	×	×	×	A	10.0	3.8	3684	60	70	0.00	–	×	×	×	×
S-50PF1E5B ×2	U-100PZ2E5	A	10.0	5.4	648	56	70	–	×	×	×	×	A	10.0	3.8	3684	56	70	0.00	–	×	×	×	×
S-100PK2E5B	U-100PZ2E5	A++	9.0	6.5	485	65	70	–	×	×	×	×	A	9.0	3.9	3231	65	70	1.25	–	×	×	×	×
S-50PK2E5B ×2	U-100PZ2E5	A++	10.0	6.4	547	56	70	–	×	×	×	×	A	10.0	3.9	3590	56	70	1.69	–	×	×	×	×
S-100PT2E5B	U-100PZ2E5	A++	10.0	6.5	535	60	70	–	×	×	×	×	A+	10.0	4.2	3324	60	70	2.07	–	×	×	×	×
S-50PT2E5B ×2	U-100PZ2E5	A++	10.0	6.4	551	55	70	–	×	×	×	×	A+	10.0	4.0	3495	55	70	2.07	–	×	×	×	×

ENERGIA · ЕНЕРГИЯ · ΕΝΕΡΓΕΙΑ · ENERGIJA · ENERGY · ENERGIE · ENERGI
626/2011

R32 （GWP＝675) *1

*1
Refrigerant leakage contributes to climate change. Refrigerant with lower global warming potential (GWP) would contribute less to global warming than a refrigerant with higher GWP, if leaked to the atmosphere. This appliance contains a refrigerant fluid with a GWP equal to 675.
This means that if 1 kg of this refrigerant fluid would be leaked to the atmosphere, the impact on global warming would be 675 times higher than 1 kg of CO_2, over a period of 100 years.
Never try to interfere with the refrigerant circuit yourself or disassemble the product yourself and always ask a professional.

*2
Energy consumption “XYZ” kWh per year, based on standard test results.
Actual energy consumption will depend on how the appliance is used and where it is located.

ENERGY ЕНЕРГИЯ · ΕΝΕΡΓΕΙΑ · ENERGIJA · ENERGIA · ENERGIE · ENERGI

Panasonic

Model name		SEER						SCOP																
								Warmer					Average							Colder				
Indoor Unit	Outdoor Unit	A ～ G	kW	SEER	*2 kWh/annum	dB	dB	A ～ G	kW	SCOP	*2 kWh/annum	elbu (2℃) kW	A ～ G	kW	SCOP	*2 kWh/annum	dB	dB	elbu (-10℃) kW	A ～ G	kW	SCOP	*2 kWh/annum	elbu (-22℃) kW
S-100PU2E5B	U-100PZ2E8	A++	10.0	6.7	521	60	70	–	×	×	×	×	A+	10.0	4.4	3182	60	70	0.00	–	×	×	×	×
S-50PU2E5B × 2	U-100PZ2E8	A++	10.0	6.7	521	47	70	–	×	×	×	×	A+	10.0	4.4	3182	47	70	0.00	–	×	×	×	×
S-100PF1E5B	U-100PZ2E8	A+	10.0	5.6	625	60	70	–	×	×	×	×	A	10.0	3.8	3684	60	70	0.00	–	×	×	×	×
S-50PF1E5B × 2	U-100PZ2E8	A	10.0	5.4	648	56	70	–	×	×	×	×	A	10.0	3.8	3684	56	70	0.00	–	×	×	×	×
S-100PK2E5B	U-100PZ2E8	A++	9.0	6.5	485	65	70	–	×	×	×	×	A	9.0	3.9	3231	65	70	1.25	–	×	×	×	×
S-50PK2E5B × 2	U-100PZ2E8	A++	10.0	6.4	547	56	70	–	×	×	×	×	A	10.0	3.9	3590	56	70	1.69	–	×	×	×	×
S-100PT2E5B	U-100PZ2E8	A++	10.0	6.5	538	60	70	–	×	×	×	×	A+	10.0	4.2	3324	60	70	2.07	–	×	×	×	×
S-50PT2E5B × 2	U-100PZ2E8	A++	10.0	6.3	554	55	70	–	×	×	×	×	A+	10.0	4.0	3495	55	70	2.07	–	×	×	×	×

ENERGIA · ЕНЕРГИЯ · ΕΝΕΡΓΕΙΑ · ENERGIJA · ENERGY · ENERGIE · ENERGI
626/2011

R32 （GWP＝675) *1

*1
Refrigerant leakage contributes to climate change. Refrigerant with lower global warming potential (GWP) would contribute less to global warming than a refrigerant with higher GWP, if leaked to the atmosphere. This appliance contains a refrigerant fluid with a GWP equal to 675.
This means that if 1 kg of this refrigerant fluid would be leaked to the atmosphere, the impact on global warming would be 675 times higher than 1 kg of CO_2, over a period of 100 years.
Never try to interfere with the refrigerant circuit yourself or disassemble the product yourself and always ask a professional.

*2
Energy consumption "XYZ" kWh per year, based on standard test results.
Actual energy consumption will depend on how the appliance is used and where it is located.

Information requirements for air-to-air air conditioners

Model(s):	Outdoor Unit	U-125PZ2E5
	Indoor Unit	S-60PU2E5B × 2
Outdoor side heat exchanger of air conditioner:		air
Indoor side heat exchanger of air conditioner:		air
Type: compressor driven vapour compression or sorption process		vapour compression
if applicable: driver of compressor: [electric motor or fuel driven, gaseous or liquid fuel, internal or external combustion engine]		electric motor

Item	Symbol	Value	Unit	Item	Symbol	Value	Unit
Rated cooling capacity	$P_{rated,c}$	12.5	kW	Seasonal space cooling energy efficiency	$\eta_{s,c}$	270.8	%
Refrigeration load	$P_{design,c}$	12.5	kW				
Declared cooling capacity for part load at given outdoor temperatures Tj and indoor 27º/19ºC (dry/wet bulb)				Declared energy efficiency ratio or gas utilization efficiency / auxiliary energy factor for part load at given outdoor temperatures Tj			
Tj= + 35 ºC	Pdc	12.5	kW	Tj = + 35 ºC	EER_d or $GUE_{c,bin}$ / $AEF_{c,bin}$	3.5	%
Tj = + 30 ºC		9.2	kW	Tj = + 30 ºC		4.8	%
Tj = + 25 ºC		5.9	kW	Tj = + 25 ºC		8.2	%
Tj = + 20 ºC		4.4	kW	Tj = + 20 ºC		12.3	%
Degradation co- efficient for air conditioners**	C_{dc}	0.25	-				
Power consumption in modes other than 'active mode'							
Off mode	P_{OFF}	0.012	kW	Crankcase heater mode	P_{CK}	0.000	kW
Thermostat-off mode	P_{TO}	0.000	kW	Standby mode	P_{SB}	0.012	kW
Other items							
Capacity control		variable		For air-to-air air conditioner: air flow rate, outdoor		5160	m³/h
Sound power level, outdoor	L_{WA}	73.0	dB				
Sound power level, indoor	L_{WA}	51.0	dB	if engine driven: Emissions of nitrogen oxides	NO_x***	-	mg/kWh fuel input GCV
				GWP of the refrigerant		675	kg CO_2 eq (100 years)
Contact details	Panasonic Testing Centre, Panasonic Marketing Europe GmbH Winsbergring 15, 22525 Hamburg, Germany						

** If C_{dc} is not determined by measurement then the default degradation coefficient air conditioners shall be 0,25.
*** from 26 September 2018.
Where information relates to multi-split air conditioners, the test result and performance data may be obtained on the basis of the performance of the outdoor unit, with a combination of indoor unit(s) recommended by the manufacturer or importer.

Information requirements for heat pumps

Model(s):	Outdoor Unit	U-125PZ2E5
	Indoor Unit	S-60PU2E5B × 2
Outdoor side heat exchanger of heat pump:		air
Indoor side heat exchanger of heat pump:		air
Indication if the heater is equipped with a supplementary heater:		no
if applicable: driver of compressor: [electric motor or fuel driven, gaseous or liquid fuel, internal or external combustion engine]		electric motor

Parameters shall be declared for the average heating season, parameters for the warmer and colder heating seasons are optional.

Item	Symbol	Value	Unit	Item	Symbol	Value	Unit
Rated heating capacity	$P_{rated,h}$	12.5	kW	Seasonal space heating energy efficiency	$\eta_{s,h}$	157.4	%
Refrigeration load	$P_{design,h}$	12.5	kW				
Declared heating capacity for part load at indoor temperature 20 °C and outdoor temperature Tj				Declared coefficient of performance or gas utilization efficiency / auxiliary energy factor for part load at given outdoor temperatures Tj			
Tj = - 7 ºC	P_{dh}	11.0	kW	Tj = - 7 ºC	COP_d or $GUE_{h,bin}$ / $AEF_{h,bin}$	2.5	%
Tj = + 2 ºC		6.7	kW	Tj = + 2 ºC		3.7	%
Tj = + 7 ºC		4.3	kW	Tj = + 7 ºC		5.9	%
Tj = + 12 ºC		3.7	kW	Tj = + 12 ºC		7.0	%
T_{biv} = bivalent temperature		12.5	kW	T_{biv} = bivalent temperature		2.2	%
T_{OL} = operation limit		7.9	kW	T_{OL} = operation limit		1.7	%
For air-to-water heat pumps: Tj = - 15 ºC (if T_{OL} < - 20 ºC)		-	kW	For water-to-air heat pumps: T_j = - 15 ºC (if T_{OL} < -20 ºC)		-	%
Bivalent temperature	T_{biv}	-10	ºC	For water-to-air heat pumps: Operation limit temperature	T_{OL}	-15	℃
Degradation co- efficient heat pumps**	C_{dh}	0.25	-				
Power consumption in modes other than 'active mode'				Supplementary heater			
Off mode	P_{OFF}	0.012	kW	back-up heating capacity *	elbu	0.0	kW
Thermostat-off mode	P_{TO}	0.000	kW	Type of energy input			
Crankcase heater mode	P_{CK}	0.000	kW	Standby mode	P_{SB}	0.012	kW
Other items							
Capacity control		variable		For air-to-air heat pumps: air flow rate,outdoor		4680	m³/h
Sound power level, outdoor	L_{WA}	73.0	dB	For water-/brine-to-air heat pumps: Rated brine or water flow rate, outdoor side heat exchanger		-	m³/h
Sound power level, indoor	L_{WA}	51.0	dB	Emissions of nitrogen oxides (if applicable)	NO_x***	-	mg/kWh fuel input GCV
				GWP of the refrigerant		675	kg CO_2 eq (100 years)
Contact details	Panasonic Testing Centre, Panasonic Marketing Europe GmbH Winsbergring 15, 22525 Hamburg, Germany						

** If C_{dh} is not determined by measurement then the default degradation coefficient of heat pumps shall be 0,25.
*** from 26 September 2018.
Where information relates to multi-split heat pumps, the test result and performance data may be obtained on the basis of the performance of the outdoor unit, with a combination of indoor unit(s) recommended by the manufacturer or importer.

Information requirements for air-to-air air conditioners

Model(s):	Outdoor Unit	U-140PZ2E5
	Indoor Unit	S-71PU2E5B × 2
Outdoor side heat exchanger of air conditioner:		air
Indoor side heat exchanger of air conditioner:		air
Type: compressor driven vapour compression or sorption process		vapour compression
if applicable: driver of compressor: [electric motor or fuel driven, gaseous or liquid fuel, internal or external combustion engine]		electric motor

Item	Symbol	Value	Unit	Item	Symbol	Value	Unit
Rated cooling capacity	$P_{rated,c}$	14.0	kW	Seasonal space cooling energy efficiency	$\eta_{s,c}$	260.3	%
Refrigeration load	$P_{design,c}$	14.0	kW				
Declared cooling capacity for part load at given outdoor temperatures Tj and indoor 27°/19°C (dry/wet bulb)				Declared energy efficiency ratio or gas utilization efficiency / auxiliary energy factor for part load at given outdoor temperatures Tj			
Tj= + 35 °C	Pdc	14.0	kW	Tj= + 35 °C	EER_d or $GUE_{c,bin}$ / $AEF_{c,bin}$	3.2	%
Tj= + 30 °C		10.3	kW	Tj= + 30 °C		4.6	%
Tj= + 25 °C		6.6	kW	Tj= + 25 °C		7.8	%
Tj= + 20 °C		4.4	kW	Tj= + 20 °C		12.2	%
Degradation co- efficient for air conditioners**	C_{dc}	0.25	-				
Power consumption in modes other than 'active mode'							
Off mode	P_{OFF}	0.012	kW	Crankcase heater mode	P_{CK}	0.000	kW
Thermostat-off mode	P_{TO}	0.000	kW	Standby mode	P_{SB}	0.012	kW
Other items							
Capacity control		variable		For air-to-air air conditioner: air flow rate, outdoor		5340	m³/h
Sound power level, outdoor	L_{WA}	74.0	dB				
Sound power level, indoor	L_{WA}	52.0	dB	if engine driven: Emissions of nitrogen oxides	NO_x***	-	mg/kWh fuel input GCV
				GWP of the refrigerant		675	kg CO_2 eq (100 years)
Contact details	Panasonic Testing Centre, Panasonic Marketing Europe GmbH Winsbergring 15, 22525 Hamburg, Germany						

** If C_{dc} is not determined by measurement then the default degradation coefficient air conditioners shall be 0,25.
*** from 26 September 2018.
Where information relates to multi-split air conditioners, the test result and performance data may be obtained on the basis of the performance of the outdoor unit, with a combination of indoor unit(s) recommended by the manufacturer or importer.

Information requirements for heat pumps

Model(s):	Outdoor Unit	U-140PZ2E5
	Indoor Unit	S-71PU2E5B × 2
Outdoor side heat exchanger of heat pump:		air
Indoor side heat exchanger of heat pump:		air
Indication if the heater is equipped with a supplementary heater:		no
if applicable: driver of compressor: [electric motor or fuel driven, gaseous or liquid fuel, internal or external combustion engine]		electric motor

Parameters shall be declared for the average heating season, parameters for the warmer and colder heating seasons are optional.

Item	Symbol	Value	Unit	Item	Symbol	Value	Unit
Rated heating capacity	$P_{rated,h}$	14.0	kW	Seasonal space heating energy efficiency	$\eta_{s,h}$	152.5	%
Refrigeration load	$P_{design,h}$	14.0	kW				
Declared heating capacity for part load at indoor temperature 20 °C and outdoor temperature Tj				Declared coefficient of performance or gas utilization efficiency / auxiliary energy factor for part load at given outdoor temperatures Tj			
Tj = - 7 °C	P_{dh}	12.3	kW	Tj = - 7 °C	COP_d or $GUE_{h,bin}$ / $AEF_{h,bin}$	2.4	%
Tj = + 2 °C		7.5	kW	Tj = + 2 °C		3.6	%
Tj = + 7 °C		4.8	kW	Tj = + 7 °C		5.8	%
Tj = + 12 °C		3.7	kW	Tj = + 12 °C		7.0	%
T_{biv} = bivalent temperature		12.3	kW	T_{biv} = bivalent temperature		2.4	%
T_{OL} = operation limit		8.2	kW	T_{OL} = operation limit		1.7	%
For air-to-water heat pumps: Tj = - 15 °C (if T_{OL} < - 20 °C)		-	kW	For water-to-air heat pumps: T_j = - 15 °C (if T_{OL} < -20 °C)		-	%
Bivalent temperature	T_{biv}	-7	°C	For water-to-air heat pumps: Operation limit temperature	T_{OL}	-15	℃
Degradation co- efficient heat pumps**	C_{dh}	0.25	-				
Power consumption in modes other than 'active mode'				Supplementary heater			
Off mode	P_{OFF}	0.012	kW	back-up heating capacity *	elbu	3.3	kW
Thermostat-off mode	P_{TO}	0.000	kW	Type of energy input			
Crankcase heater mode	P_{CK}	0.000	kW	Standby mode	P_{SB}	0.012	kW
Other items							
Capacity control		variable		For air-to-air heat pumps: air flow rate,outdoor		4980	m³/h
Sound power level, outdoor	L_{WA}	74.0	dB	For water-/brine-to-air heat pumps: Rated brine or water flow rate, outdoor side heat exchanger		-	m³/h
Sound power level, indoor	L_{WA}	52.0	dB	Emissions of nitrogen oxides (if applicable)	NO_x***	-	mg/kWh fuel input GCV
				GWP of the refrigerant		675	kg CO_2 eq (100 years)
Contact details	Panasonic Testing Centre, Panasonic Marketing Europe GmbH Winsbergring 15, 22525 Hamburg, Germany						

** If C_{dh} is not determined by measurement then the default degradation coefficient of heat pumps shall be 0,25.
*** from 26 September 2018.
Where information relates to multi-split heat pumps, the test result and performance data may be obtained on the basis of the performance of the outdoor unit, with a combination of indoor unit(s) recommended by the manufacturer or importer.

Information requirements for air-to-air air conditioners

Model(s):	Outdoor Unit	U-125PZ2E5
	Indoor Unit	S-125PU2E5B

Outdoor side heat exchanger of air conditioner:	air
Indoor side heat exchanger of air conditioner:	air
Type: compressor driven vapour compression or sorption process	vapour compression
if applicable: driver of compressor: [electric motor or fuel driven, gaseous or liquid fuel, internal or external combustion engine]	electric motor

Item	Symbol	Value	Unit	Item	Symbol	Value	Unit
Rated cooling capacity	$P_{rated,c}$	12.5	kW	Seasonal space cooling energy efficiency	$\eta_{s,c}$	267.1	%
Refrigeration load	$P_{design,c}$	12.5	kW				
Declared cooling capacity for part load at given outdoor temperatures Tj and indoor 27º/19ºC (dry/wet bulb)				Declared energy efficiency ratio or gas utilization efficiency / auxiliary energy factor for part load at given outdoor temperatures Tj			
Tj= + 35 ºC	Pdc	12.5	kW	Tj = + 35 ºC	EER_d or $GUE_{c,bin}$ / $AEF_{c,bin}$	3.5	%
Tj = + 30 ºC		9.2	kW	Tj = + 30 ºC		4.8	%
Tj = + 25 ºC		5.9	kW	Tj = + 25 ºC		8.2	%
Tj = + 20 ºC		4.2	kW	Tj = + 20 ºC		12.3	%
Degradation co- efficient for air conditioners**	C_{dc}	0.25	-				
Power consumption in modes other than 'active mode'							
Off mode	P_{OFF}	0.017	kW	Crankcase heater mode	P_{CK}	0.000	kW
Thermostat-off mode	P_{TO}	0.015	kW	Standby mode	P_{SB}	0.017	kW
Other items							
Capacity control		variable		For air-to-air air conditioner: air flow rate, outdoor		5160	m³/h
Sound power level, outdoor	L_{WA}	73.0	dB				
Sound power level, indoor	L_{WA}	61.0	dB	if engine driven: Emissions of nitrogen oxides	NO_x***	-	mg/kWh fuel input GCV
				GWP of the refrigerant		675	kg CO_2 eq (100 years)
Contact details	Panasonic Testing Centre, Panasonic Marketing Europe GmbH Winsbergring 15, 22525 Hamburg, Germany						

** If C_{dc} is not determined by measurement then the default degradation coefficient air conditioners shall be 0,25.
*** from 26 September 2018.
Where information relates to multi-split air conditioners, the test result and performance data may be obtained on the basis of the performance of the outdoor unit, with a combination of indoor unit(s) recommended by the manufacturer or importer.

Information requirements for heat pumps

Model(s):	Outdoor Unit	U-125PZ2E5
	Indoor Unit	S-125PU2E5B

Outdoor side heat exchanger of heat pump:	air
Indoor side heat exchanger of heat pump:	air
Indication if the heater is equipped with a supplementary heater:	no
if applicable: driver of compressor: [electric motor or fuel driven, gaseous or liquid fuel, internal or external combustion engine]	electric motor

Parameters shall be declared for the average heating season, parameters for the warmer and colder heating seasons are optional.

Item	Symbol	Value	Unit	Item	Symbol	Value	Unit
Rated heating capacity	$P_{rated,h}$	12.5	kW	Seasonal space heating energy efficiency	$\eta_{s,h}$	157.3	%
Refrigeration load	$P_{design,h}$	12.5	kW				
Declared heating capacity for part load at indoor temperature 20 °C and outdoor temperature Tj				Declared coefficient of performance or gas utilization efficiency / auxiliary energy factor for part load at given outdoor temperatures Tj			
Tj = - 7 ºC	P_{dh}	11.0	kW	Tj = - 7 ºC	COP_d or $GUE_{h,bin}$ / $AEF_{h,bin}$	2.5	%
Tj = + 2 ºC		6.7	kW	Tj = + 2 ºC		3.7	%
Tj = + 7 ºC		4.3	kW	Tj = + 7 ºC		5.9	%
Tj = + 12 ºC		3.9	kW	Tj = + 12 ºC		7.0	%
T_{biv} = bivalent temperature		12.5	kW	T_{biv} = bivalent temperature		2.2	%
T_{OL} = operation limit		8.3	kW	T_{OL} = operation limit		1.7	%
For air-to-water heat pumps: Tj = - 15 ºC (if T_{OL} < - 20 ºC)		-	kW	For water-to-air heat pumps: T_j = - 15 ºC (if T_{OL} < -20 ºC)		-	%
Bivalent temperature	T_{biv}	-10	ºC	For water-to-air heat pumps: Operation limit temperature	T_{OL}	-15	℃
Degradation co- efficient heat pumps**	C_{dh}	0.25	-				
Power consumption in modes other than 'active mode'				Supplementary heater			
Off mode	P_{OFF}	0.017	kW	back-up heating capacity *	elbu	0.0	kW
Thermostat-off mode	P_{TO}	0.015	kW	Type of energy input			
Crankcase heater mode	P_{CK}	0.000	kW	Standby mode	P_{SB}	0.017	kW
Other items							
Capacity control		variable		For air-to-air heat pumps: air flow rate,outdoor		4680	m³/h
Sound power level, outdoor	L_{WA}	73.0	dB	For water-/brine-to-air heat pumps: Rated brine or water flow rate, outdoor side heat exchanger		-	m³/h
Sound power level, indoor	L_{WA}	61.0	dB	Emissions of nitrogen oxides (if applicable)	NO_x***	-	mg/kWh fuel input GCV
				GWP of the refrigerant		675	kg CO_2 eq (100 years)
Contact details	Panasonic Testing Centre, Panasonic Marketing Europe GmbH Winsbergring 15, 22525 Hamburg, Germany						

** If C_{dh} is not determined by measurement then the default degradation coefficient of heat pumps shall be 0,25.
*** from 26 September 2018.
Where information relates to multi-split heat pumps, the test result and performance data may be obtained on the basis of the performance of the outdoor unit, with a combination of indoor unit(s) recommended by the manufacturer or importer.

Information requirements for air-to-air air conditioners

Model(s):	Outdoor Unit	U-140PZ2E5
	Indoor Unit	S-140PU2E5B
Outdoor side heat exchanger of air conditioner:		air
Indoor side heat exchanger of air conditioner:		air
Type: compressor driven vapour compression or sorption process		vapour compression
if applicable: driver of compressor: [electric motor or fuel driven, gaseous or liquid fuel, internal or external combustion engine]		electric motor

Item	Symbol	Value	Unit	Item	Symbol	Value	Unit
Rated cooling capacity	$P_{rated,c}$	14.0	kW	Seasonal space cooling energy efficiency	$\eta_{s,c}$	257.3	%
Refrigeration load	$P_{design,c}$	14.0	kW				
Declared cooling capacity for part load at given outdoor temperatures Tj and indoor 27°/19°C (dry/wet bulb)				Declared energy efficiency ratio or gas utilization efficiency / auxiliary energy factor for part load at given outdoor temperatures Tj			
Tj= + 35 °C	Pdc	14.0	kW	Tj= + 35 °C	EER_d or $GUE_{c,bin}$ / $AEF_{c,bin}$	3.2	%
Tj= + 30 °C		10.3	kW	Tj= + 30 °C		4.6	%
Tj= + 25 °C		6.6	kW	Tj= + 25 °C		7.8	%
Tj= + 20 °C		4.2	kW	Tj= + 20 °C		12.2	%
Degradation co- efficient for air conditioners**	C_{dc}	0.25	-				
Power consumption in modes other than 'active mode'							
Off mode	P_{OFF}	0.017	kW	Crankcase heater mode	P_{CK}	0.000	kW
Thermostat-off mode	P_{TO}	0.015	kW	Standby mode	P_{SB}	0.017	kW
Other items							
Capacity control		variable		For air-to-air air conditioner: air flow rate, outdoor		5340	m³/h
Sound power level, outdoor	L_{WA}	74.0	dB				
Sound power level, indoor	L_{WA}	62.0	dB	if engine driven: Emissions of nitrogen oxides	NO_x***	-	mg/kWh fuel input GCV
				GWP of the refrigerant		675	kg CO_2 eq (100 years)
Contact details	Panasonic Testing Centre, Panasonic Marketing Europe GmbH Winsbergring 15, 22525 Hamburg, Germany						

** If C_{dc} is not determined by measurement then the default degradation coefficient air conditioners shall be 0,25.
*** from 26 September 2018.
Where information relates to multi-split air conditioners, the test result and performance data may be obtained on the basis of the performance of the outdoor unit, with a combination of indoor unit(s) recommended by the manufacturer or importer.

Information requirements for heat pumps

Model(s):	Outdoor Unit	U-140PZ2E5
	Indoor Unit	S-140PU2E5B
Outdoor side heat exchanger of heat pump:		air
Indoor side heat exchanger of heat pump:		air
Indication if the heater is equipped with a supplementary heater:		no
if applicable: driver of compressor: [electric motor or fuel driven, gaseous or liquid fuel, internal or external combustion engine]		electric motor

Parameters shall be declared for the average heating season, parameters for the warmer and colder heating seasons are optional.

Item	Symbol	Value	Unit	Item	Symbol	Value	Unit
Rated heating capacity	$P_{rated,h}$	14.0	kW	Seasonal space heating energy efficiency	$\eta_{s,h}$	152.4	%
Refrigeration load	$P_{design,h}$	14.0	kW				
Declared heating capacity for part load at indoor temperature 20 °C and outdoor temperature Tj				Declared coefficient of performance or gas utilization efficiency / auxiliary energy factor for part load at given outdoor temperatures Tj			
Tj= - 7 °C	P_{dh}	12.3	kW	Tj= - 7 °C	COP_d or $GUE_{h,bin}$ / $AEF_{h,bin}$	2.4	%
Tj= + 2 °C		7.5	kW	Tj= + 2 °C		3.6	%
Tj= + 7 °C		4.8	kW	Tj= + 7 °C		5.8	%
Tj= + 12 °C		3.9	kW	Tj= + 12 °C		7.0	%
T_{biv} = bivalent temperature		12.3	kW	T_{biv} = bivalent temperature		2.4	%
T_{OL} = operation limit		8.6	kW	T_{OL} = operation limit		1.7	%
For air-to-water heat pumps: Tj= - 15 °C (if T_{OL} < - 20 °C)		-	kW	For water-to-air heat pumps: T_j = - 15 °C (if T_{OL} < -20 °C)		-	%
Bivalent temperature	T_{biv}	-7	°C	For water-to-air heat pumps: Operation limit temperature	T_{OL}	-15	°C
Degradation co- efficient heat pumps**	C_{dh}	0.25	-				
Power consumption in modes other than 'active mode'				Supplementary heater			
Off mode	P_{OFF}	0.017	kW	back-up heating capacity *	elbu	3.1	kW
Thermostat-off mode	P_{TO}	0.015	kW	Type of energy input			
Crankcase heater mode	P_{CK}	0.000	kW	Standby mode	P_{SB}	0.017	kW
Other items							
Capacity control		variable		For air-to-air heat pumps: air flow rate,outdoor		4980	m³/h
Sound power level, outdoor	L_{WA}	74.0	dB	For water-/brine-to-air heat pumps: Rated brine or water flow rate, outdoor side heat exchanger		-	m³/h
Sound power level, indoor	L_{WA}	62.0	dB	Emissions of nitrogen oxides (if applicable)	NO_x***	-	mg/kWh fuel input GCV
				GWP of the refrigerant		675	kg CO_2 eq (100 years)
Contact details	Panasonic Testing Centre, Panasonic Marketing Europe GmbH Winsbergring 15, 22525 Hamburg, Germany						

** If C_{dh} is not determined by measurement then the default degradation coefficient of heat pumps shall be 0,25.
*** from 26 September 2018.
Where information relates to multi-split heat pumps, the test result and performance data may be obtained on the basis of the performance of the outdoor unit, with a combination of indoor unit(s) recommended by the manufacturer or importer.

Information requirements for air-to-air air conditioners

Model(s):	Outdoor Unit	U-125PZ2E8
	Indoor Unit	S-60PU2E5B × 2
Outdoor side heat exchanger of air conditioner:		air
Indoor side heat exchanger of air conditioner:		air
Type: compressor driven vapour compression or sorption process		vapour compression
if applicable: driver of compressor: [electric motor or fuel driven, gaseous or liquid fuel, internal or external combustion engine]		electric motor

Item	Symbol	Value	Unit	Item	Symbol	Value	Unit
Rated cooling capacity	$P_{rated,c}$	12.5	kW	Seasonal space cooling energy efficiency	$\eta_{s,c}$	269.8	%
Refrigeration load	$P_{design,c}$	12.5	kW				
Declared cooling capacity for part load at given outdoor temperatures Tj and indoor 27º/19ºC (dry/wet bulb)				Declared energy efficiency ratio or gas utilization efficiency / auxiliary energy factor for part load at given outdoor temperatures Tj			
Tj= + 35 ºC	Pdc	12.5	kW	Tj = + 35 ºC	EER_d or $GUE_{c,bin}$ / $AEF_{c,bin}$	3.5	%
Tj = + 30 ºC		9.2	kW	Tj = + 30 ºC		4.8	%
Tj = + 25 ºC		5.9	kW	Tj = + 25 ºC		8.2	%
Tj = + 20 ºC		4.4	kW	Tj = + 20 ºC		12.3	%
Degradation co- efficient for air conditioners**	C_{dc}	0.25	-				
Power consumption in modes other than 'active mode'							
Off mode	P_{OFF}	0.015	kW	Crankcase heater mode	P_{CK}	0.000	kW
Thermostat-off mode	P_{TO}	0.000	kW	Standby mode	P_{SB}	0.015	kW
Other items							
Capacity control		variable		For air-to-air air conditioner: air flow rate, outdoor		5160	m³/h
Sound power level, outdoor	L_{WA}	73.0	dB				
Sound power level, indoor	L_{WA}	51.0	dB	if engine driven: Emissions of nitrogen oxides	NO_x***	-	mg/kWh fuel input GCV
				GWP of the refrigerant		675	kg CO_2 eq (100 years)
Contact details	Panasonic Testing Centre, Panasonic Marketing Europe GmbH Winsbergring 15, 22525 Hamburg, Germany						

** If C_{dc} is not determined by measurement then the default degradation coefficient air conditioners shall be 0,25.
*** from 26 September 2018.
Where information relates to multi-split air conditioners, the test result and performance data may be obtained on the basis of the performance of the outdoor unit, with a combination of indoor unit(s) recommended by the manufacturer or importer.

Information requirements for heat pumps

Model(s):	Outdoor Unit	U-125PZ2E8
	Indoor Unit	S-60PU2E5B × 2
Outdoor side heat exchanger of heat pump:		air
Indoor side heat exchanger of heat pump:		air
Indication if the heater is equipped with a supplementary heater:		no
if applicable: driver of compressor: [electric motor or fuel driven, gaseous or liquid fuel, internal or external combustion engine]		electric motor

Parameters shall be declared for the average heating season, parameters for the warmer and colder heating seasons are optional.

Item	Symbol	Value	Unit	Item	Symbol	Value	Unit
Rated heating capacity	$P_{rated,h}$	12.5	kW	Seasonal space heating energy efficiency	$\eta_{s,h}$	157.4	%
Refrigeration load	$P_{design,h}$	12.5	kW				
Declared heating capacity for part load at indoor temperature 20 °C and outdoor temperature Tj				Declared coefficient of performance or gas utilization efficiency / auxiliary energy factor for part load at given outdoor temperatures Tj			
Tj = - 7 ºC	P_{dh}	11.0	kW	Tj = - 7 ºC	COP_d or $GUE_{h,bin}$ / $AEF_{h,bin}$	2.5	%
Tj = + 2 ºC		6.7	kW	Tj = + 2 ºC		3.7	%
Tj = + 7 ºC		4.3	kW	Tj = + 7 ºC		5.9	%
Tj = + 12 ºC		3.7	kW	Tj = + 12 ºC		7.0	%
T_{biv} = bivalent temperature		12.5	kW	T_{biv} = bivalent temperature		2.2	%
T_{OL} = operation limit		7.9	kW	T_{OL} = operation limit		1.7	%
For air-to-water heat pumps: Tj = - 15 ºC (if T_{OL} < - 20 ºC)		-	kW	For water-to-air heat pumps: T_j = - 15 ºC (if T_{OL} < -20 ºC)		-	%
Bivalent temperature	T_{biv}	-10	ºC	For water-to-air heat pumps: Operation limit temperature	T_{OL}	-15	℃
Degradation co- efficient heat pumps**	C_{dh}	0.25	-				
Power consumption in modes other than 'active mode'				Supplementary heater			
Off mode	P_{OFF}	0.015	kW	back-up heating capacity *	elbu	0.0	kW
Thermostat-off mode	P_{TO}	0.000	kW	Type of energy input			
Crankcase heater mode	P_{CK}	0.000	kW	Standby mode	P_{SB}	0.015	kW
Other items							
Capacity control		variable		For air-to-air heat pumps: air flow rate,outdoor		4680	m³/h
Sound power level, outdoor	L_{WA}	73.0	dB	For water-/brine-to-air heat pumps: Rated brine or water flow rate, outdoor side heat exchanger		-	m³/h
Sound power level, indoor	L_{WA}	51.0	dB	Emissions of nitrogen oxides (if applicable)	NO_x***	-	mg/kWh fuel input GCV
				GWP of the refrigerant		675	kg CO_2 eq (100 years)
Contact details	Panasonic Testing Centre, Panasonic Marketing Europe GmbH Winsbergring 15, 22525 Hamburg, Germany						

** If C_{dh} is not determined by measurement then the default degradation coefficient of heat pumps shall be 0,25.
*** from 26 September 2018.
Where information relates to multi-split heat pumps, the test result and performance data may be obtained on the basis of the performance of the outdoor unit, with a combination of indoor unit(s) recommended by the manufacturer or importer.

Information requirements for air-to-air air conditioners

Model(s):	Outdoor Unit	U-140PZ2E8
	Indoor Unit	S-71PU2E5B × 2
Outdoor side heat exchanger of air conditioner:		air
Indoor side heat exchanger of air conditioner:		air
Type: compressor driven vapour compression or sorption process		vapour compression
if applicable: driver of compressor: [electric motor or fuel driven, gaseous or liquid fuel, internal or external combustion engine]		electric motor

Item	Symbol	Value	Unit	Item	Symbol	Value	Unit
Rated cooling capacity	$P_{rated,c}$	14.0	kW	Seasonal space cooling energy efficiency	$\eta_{s,c}$	259.4	%
Refrigeration load	$P_{design,c}$	14.0	kW				
Declared cooling capacity for part load at given outdoor temperatures Tj and indoor 27°/19°C (dry/wet bulb)				Declared energy efficiency ratio or gas utilization efficiency / auxiliary energy factor for part load at given outdoor temperatures Tj			
Tj= + 35 °C	Pdc	14.0	kW	Tj = + 35 °C	EER_d or $GUE_{c,bin}$ / $AEF_{c,bin}$	3.2	%
Tj = + 30 °C		10.3	kW	Tj = + 30 °C		4.6	%
Tj = + 25 °C		6.6	kW	Tj = + 25 °C		7.8	%
Tj = + 20 °C		4.4	kW	Tj = + 20 °C		12.2	%
Degradation co- efficient for air conditioners**	C_{dc}	0.25	-				
Power consumption in modes other than 'active mode'							
Off mode	P_{OFF}	0.015	kW	Crankcase heater mode	P_{CK}	0.000	kW
Thermostat-off mode	P_{TO}	0.000	kW	Standby mode	P_{SB}	0.015	kW
Other items							
Capacity control		variable		For air-to-air air conditioner: air flow rate, outdoor		5340	m³/h
Sound power level, outdoor	L_{WA}	74.0	dB				
Sound power level, indoor	L_{WA}	52.0	dB	if engine driven: Emissions of nitrogen oxides	NO_x***	-	mg/kWh fuel input GCV
				GWP of the refrigerant		675	kg CO_2 eq (100 years)
Contact details	Panasonic Testing Centre, Panasonic Marketing Europe GmbH Winsbergring 15, 22525 Hamburg, Germany						

** If C_{dc} is not determined by measurement then the default degradation coefficient air conditioners shall be 0,25.
*** from 26 September 2018.
Where information relates to multi-split air conditioners, the test result and performance data may be obtained on the basis of the performance of the outdoor unit, with a combination of indoor unit(s) recommended by the manufacturer or importer.

Information requirements for heat pumps

Model(s):	Outdoor Unit	U-140PZ2E8
	Indoor Unit	S-71PU2E5B × 2
Outdoor side heat exchanger of heat pump:		air
Indoor side heat exchanger of heat pump:		air
Indication if the heater is equipped with a supplementary heater:		no
if applicable: driver of compressor: [electric motor or fuel driven, gaseous or liquid fuel, internal or external combustion engine]		electric motor

Parameters shall be declared for the average heating season, parameters for the warmer and colder heating seasons are optional.

Item	Symbol	Value	Unit	Item	Symbol	Value	Unit
Rated heating capacity	$P_{rated,h}$	14.0	kW	Seasonal space heating energy efficiency	$\eta_{s,h}$	152.5	%
Refrigeration load	$P_{design,h}$	14.0	kW				
Declared heating capacity for part load at indoor temperature 20 °C and outdoor temperature Tj				Declared coefficient of performance or gas utilization efficiency / auxiliary energy factor for part load at given outdoor temperatures Tj			
Tj = - 7 °C	P_{dh}	12.3	kW	Tj = - 7 °C	COP_d or $GUE_{h,bin}$ / $AEF_{h,bin}$	2.4	%
Tj = + 2 °C		7.5	kW	Tj = + 2 °C		3.6	%
Tj = + 7 °C		4.8	kW	Tj = + 7 °C		5.8	%
Tj = + 12 °C		3.7	kW	Tj = + 12 °C		7.0	%
T_{biv} = bivalent temperature		12.3	kW	T_{biv} = bivalent temperature		2.4	%
T_{OL} = operation limit		8.2	kW	T_{OL} = operation limit		1.7	%
For air-to-water heat pumps: Tj = - 15 °C (if T_{OL} < - 20 °C)		-	kW	For water-to-air heat pumps: T_j = - 15 °C (if T_{OL} < -20 °C)		-	%
Bivalent temperature	T_{biv}	-7	°C	For water-to-air heat pumps: Operation limit temperature	T_{OL}	-15	°C
Degradation co- efficient heat pumps**	C_{dh}	0.25	-				
Power consumption in modes other than 'active mode'				Supplementary heater			
Off mode	P_{OFF}	0.015	kW	back-up heating capacity *	elbu	3.3	kW
Thermostat-off mode	P_{TO}	0.000	kW	Type of energy input			
Crankcase heater mode	P_{CK}	0.000	kW	Standby mode	P_{SB}	0.015	kW
Other items							
Capacity control		variable		For air-to-air heat pumps: air flow rate,outdoor		4980	m³/h
Sound power level, outdoor	L_{WA}	74.0	dB	For water-/brine-to-air heat pumps: Rated brine or water flow rate, outdoor side heat exchanger		-	m³/h
Sound power level, indoor	L_{WA}	52.0	dB	Emissions of nitrogen oxides (if applicable)	NO_x***	-	mg/kWh fuel input GCV
				GWP of the refrigerant		675	kg CO_2 eq (100 years)
Contact details	Panasonic Testing Centre, Panasonic Marketing Europe GmbH Winsbergring 15, 22525 Hamburg, Germany						

** If C_{dh} is not determined by measurement then the default degradation coefficient of heat pumps shall be 0,25.
*** from 26 September 2018.
Where information relates to multi-split heat pumps, the test result and performance data may be obtained on the basis of the performance of the outdoor unit, with a combination of indoor unit(s) recommended by the manufacturer or importer.

Information requirements for air-to-air air conditioners

Model(s):	Outdoor Unit	U-125PZ2E8
	Indoor Unit	S-125PU2E5B
Outdoor side heat exchanger of air conditioner:		air
Indoor side heat exchanger of air conditioner:		air
Type: compressor driven vapour compression or sorption process		vapour compression
if applicable: driver of compressor: [electric motor or fuel driven, gaseous or liquid fuel, internal or external combustion engine]		electric motor

Item	Symbol	Value	Unit	Item	Symbol	Value	Unit
Rated cooling capacity	$P_{rated,c}$	12.5	kW	Seasonal space cooling energy efficiency	$\eta_{s,c}$	266.1	%
Refrigeration load	$P_{design,c}$	12.5	kW				
Declared cooling capacity for part load at given outdoor temperatures Tj and indoor 27º/19ºC (dry/wet bulb)				Declared energy efficiency ratio or gas utilization efficiency / auxiliary energy factor for part load at given outdoor temperatures Tj			
Tj= + 35 ºC	Pdc	12.5	kW	Tj = + 35 ºC	EER_d or $GUE_{c,bin}$ / $AEF_{c,bin}$	3.5	%
Tj = + 30 ºC		9.2	kW	Tj = + 30 ºC		4.8	%
Tj = + 25 ºC		5.9	kW	Tj = + 25 ºC		8.2	%
Tj = + 20 ºC		4.2	kW	Tj = + 20 ºC		12.3	%
Degradation co- efficient for air conditioners**	C_{dc}	0.25	-				
Power consumption in modes other than 'active mode'							
Off mode	P_{OFF}	0.020	kW	Crankcase heater mode	P_{CK}	0.000	kW
Thermostat-off mode	P_{TO}	0.015	kW	Standby mode	P_{SB}	0.020	kW
Other items							
Capacity control		variable		For air-to-air air conditioner: air flow rate, outdoor		5160	m³/h
Sound power level, outdoor	L_{WA}	73.0	dB				
Sound power level, indoor	L_{WA}	61.0	dB	if engine driven: Emissions of nitrogen oxides	NO_x***	-	mg/kWh fuel input GCV
				GWP of the refrigerant		675	kg CO_2 eq (100 years)
Contact details	Panasonic Testing Centre, Panasonic Marketing Europe GmbH Winsbergring 15, 22525 Hamburg, Germany						

** If C_{dc} is not determined by measurement then the default degradation coefficient air conditioners shall be 0,25.
*** from 26 September 2018.
Where information relates to multi-split air conditioners, the test result and performance data may be obtained on the basis of the performance of the outdoor unit, with a combination of indoor unit(s) recommended by the manufacturer or importer.

Information requirements for heat pumps

Model(s):	Outdoor Unit	U-125PZ2E8
	Indoor Unit	S-125PU2E5B
Outdoor side heat exchanger of heat pump:		air
Indoor side heat exchanger of heat pump:		air
Indication if the heater is equipped with a supplementary heater:		no
if applicable: driver of compressor: [electric motor or fuel driven, gaseous or liquid fuel, internal or external combustion engine]		electric motor

Parameters shall be declared for the average heating season, parameters for the warmer and colder heating seasons are optional.

Item	Symbol	Value	Unit	Item	Symbol	Value	Unit
Rated heating capacity	$P_{rated,h}$	12.5	kW	Seasonal space heating energy efficiency	$\eta_{s,h}$	157.3	%
Refrigeration load	$P_{design,h}$	12.5	kW				
Declared heating capacity for part load at indoor temperature 20 °C and outdoor temperature Tj				Declared coefficient of performance or gas utilization efficiency / auxiliary energy factor for part load at given outdoor temperatures Tj			
Tj = - 7 ºC	P_{dh}	11.0	kW	Tj = - 7 ºC	COP_d or $GUE_{h,bin}$ / $AEF_{h,bin}$	2.5	%
Tj = + 2 ºC		6.7	kW	Tj = + 2 ºC		3.7	%
Tj = + 7 ºC		4.3	kW	Tj = + 7 ºC		5.9	%
Tj = + 12 ºC		3.9	kW	Tj = + 12 ºC		7.0	%
T_{biv} = bivalent temperature		12.5	kW	T_{biv} = bivalent temperature		2.2	%
T_{OL} = operation limit		8.3	kW	T_{OL} = operation limit		1.7	%
For air-to-water heat pumps: Tj = - 15 ºC (if T_{OL} < - 20 ºC)		-	kW	For water-to-air heat pumps: T_j = - 15 ºC (if T_{OL} < -20 ºC)		-	%
Bivalent temperature	T_{biv}	-10	ºC	For water-to-air heat pumps: Operation limit temperature	T_{OL}	-15	℃
Degradation co- efficient heat pumps**	C_{dh}	0.25	-				
Power consumption in modes other than 'active mode'				Supplementary heater			
Off mode	P_{OFF}	0.020	kW	back-up heating capacity *	elbu	0.0	kW
Thermostat-off mode	P_{TO}	0.015	kW	Type of energy input			
Crankcase heater mode	P_{CK}	0.000	kW	Standby mode	P_{SB}	0.020	kW
Other items							
Capacity control		variable		For air-to-air heat pumps: air flow rate,outdoor		4680	m³/h
Sound power level, outdoor	L_{WA}	73.0	dB	For water-/brine-to-air heat pumps: Rated brine or water flow rate, outdoor side heat exchanger		-	m³/h
Sound power level, indoor	L_{WA}	61.0	dB	Emissions of nitrogen oxides (if applicable)	NO_x***	-	mg/kWh fuel input GCV
				GWP of the refrigerant		675	kg CO_2 eq (100 years)
Contact details	Panasonic Testing Centre, Panasonic Marketing Europe GmbH Winsbergring 15, 22525 Hamburg, Germany						

** If C_{dh} is not determined by measurement then the default degradation coefficient of heat pumps shall be 0,25.
*** from 26 September 2018.
Where information relates to multi-split heat pumps, the test result and performance data may be obtained on the basis of the performance of the outdoor unit, with a combination of indoor unit(s) recommended by the manufacturer or importer.

Information requirements for air-to-air air conditioners

Model(s):	Outdoor Unit	U-140PZ2E8
	Indoor Unit	S-140PU2E5B

Outdoor side heat exchanger of air conditioner:	air
Indoor side heat exchanger of air conditioner:	air
Type: compressor driven vapour compression or sorption process	vapour compression
if applicable: driver of compressor: [electric motor or fuel driven, gaseous or liquid fuel, internal or external combustion engine]	electric motor

Item	Symbol	Value	Unit	Item	Symbol	Value	Unit
Rated cooling capacity	$P_{rated,c}$	14.0	kW	Seasonal space cooling energy efficiency	$\eta_{s,c}$	256.5	%
Refrigeration load	$P_{design,c}$	14.0	kW				
Declared cooling capacity for part load at given outdoor temperatures Tj and indoor 27º/19ºC (dry/wet bulb)				Declared energy efficiency ratio or gas utilization efficiency / auxiliary energy factor for part load at given outdoor temperatures Tj			
Tj= + 35 °C	Pdc	14.0	kW	Tj = + 35 °C	EER_d or $GUE_{c,bin}$ / $AEF_{c,bin}$	3.2	%
Tj = + 30 °C		10.3	kW	Tj = + 30 °C		4.6	%
Tj = + 25 °C		6.6	kW	Tj = + 25 °C		7.8	%
Tj = + 20 °C		4.2	kW	Tj = + 20 °C		12.2	%
Degradation co- efficient for air conditioners**	C_{dc}	0.25	-				
Power consumption in modes other than 'active mode'							
Off mode	P_{OFF}	0.020	kW	Crankcase heater mode	P_{CK}	0.000	kW
Thermostat-off mode	P_{TO}	0.015	kW	Standby mode	P_{SB}	0.020	kW
Other items							
Capacity control		variable		For air-to-air air conditioner: air flow rate, outdoor		5340	m³/h
Sound power level, outdoor	L_{WA}	74.0	dB				
Sound power level, indoor	L_{WA}	62.0	dB	if engine driven: Emissions of nitrogen oxides	NO_x***	-	mg/kWh fuel input GCV
				GWP of the refrigerant		675	kg CO_2 eq (100 years)
Contact details	Panasonic Testing Centre, Panasonic Marketing Europe GmbH Winsbergring 15, 22525 Hamburg, Germany						

** If C_{dc} is not determined by measurement then the default degradation coefficient air conditioners shall be 0,25.
*** from 26 September 2018.
Where information relates to multi-split air conditioners, the test result and performance data may be obtained on the basis of the performance of the outdoor unit, with a combination of indoor unit(s) recommended by the manufacturer or importer.

Information requirements for heat pumps

Model(s):	Outdoor Unit	U-140PZ2E8
	Indoor Unit	S-140PU2E5B

Outdoor side heat exchanger of heat pump:	air
Indoor side heat exchanger of heat pump:	air
Indication if the heater is equipped with a supplementary heater:	no
if applicable: driver of compressor: [electric motor or fuel driven, gaseous or liquid fuel, internal or external combustion engine]	electric motor

Parameters shall be declared for the average heating season, parameters for the warmer and colder heating seasons are optional.

Item	Symbol	Value	Unit	Item	Symbol	Value	Unit
Rated heating capacity	$P_{rated,h}$	14.0	kW	Seasonal space heating energy efficiency	$\eta_{s,h}$	152.4	%
Refrigeration load	$P_{design,h}$	14.0	kW				
Declared heating capacity for part load at indoor temperature 20 °C and outdoor temperature Tj				Declared coefficient of performance or gas utilization efficiency / auxiliary energy factor for part load at given outdoor temperatures Tj			
Tj = - 7 °C	P_{dh}	12.3	kW	Tj = - 7 °C	COP_d or $GUE_{h,bin}$ / $AEF_{h,bin}$	2.4	%
Tj = + 2 °C		7.5	kW	Tj = + 2 °C		3.6	%
Tj = + 7 °C		4.8	kW	Tj = + 7 °C		5.8	%
Tj = + 12 °C		3.9	kW	Tj = + 12 °C		7.0	%
T_{biv} = bivalent temperature		12.3	kW	T_{biv} = bivalent temperature		2.4	%
T_{OL} = operation limit		8.6	kW	T_{OL} = operation limit		1.7	%
For air-to-water heat pumps: Tj = - 15 °C (if T_{OL} < - 20 °C)		-	kW	For water-to-air heat pumps: T_j = - 15 °C (if T_{OL} < -20 °C)		-	%
Bivalent temperature	T_{biv}	-7	°C	For water-to-air heat pumps: Operation limit temperature	T_{OL}	-15	℃
Degradation co- efficient heat pumps**	C_{dh}	0.25	-				
Power consumption in modes other than 'active mode'				Supplementary heater			
Off mode	P_{OFF}	0.020	kW	back-up heating capacity *	elbu	3.1	kW
Thermostat-off mode	P_{TO}	0.015	kW	Type of energy input			
Crankcase heater mode	P_{CK}	0.000	kW	Standby mode	P_{SB}	0.020	kW
Other items							
Capacity control		variable		For air-to-air heat pumps: air flow rate,outdoor		4980	m³/h
Sound power level, outdoor	L_{WA}	74.0	dB	For water-/brine-to-air heat pumps: Rated brine or water flow rate, outdoor side heat exchanger		-	m³/h
Sound power level, indoor	L_{WA}	62.0	dB	Emissions of nitrogen oxides (if applicable)	NO_x***	-	mg/kWh fuel input GCV
				GWP of the refrigerant		675	kg CO_2 eq (100 years)
Contact details	Panasonic Testing Centre, Panasonic Marketing Europe GmbH Winsbergring 15, 22525 Hamburg, Germany						

** If C_{dh} is not determined by measurement then the default degradation coefficient of heat pumps shall be 0,25.
*** from 26 September 2018.
Where information relates to multi-split heat pumps, the test result and performance data may be obtained on the basis of the performance of the outdoor unit, with a combination of indoor unit(s) recommended by the manufacturer or importer.

Information requirements for air-to-air air conditioners

Model(s):	Outdoor Unit	U-125PZ2E5
	Indoor Unit	S-60PT2E5B x2
Outdoor side heat exchanger of air conditioner:		air
Indoor side heat exchanger of air conditioner:		air
Type: compressor driven vapour compression or sorption process		vapour compression
if applicable: driver of compressor: [electric motor or fuel driven, gaseous or liquid fuel, internal or external combustion engine]		electric motor

Item	Symbol	Value	Unit	Item	Symbol	Value	Unit
Rated cooling capacity	$P_{rated,c}$	12.5	kW	Seasonal space cooling energy efficiency	$\eta_{s,c}$	241.4	%
Refrigeration load	$P_{design,c}$	12.5	kW				
Declared cooling capacity for part load at given outdoor temperatures Tj and indoor 27°/19°C (dry/wet bulb)				Declared energy efficiency ratio or gas utilization efficiency / auxiliary energy factor for part load at given outdoor temperatures Tj			
Tj= + 35 °C	Pdc	12.5	kW	Tj = + 35 °C	EER_d or $GUE_{c,bin}$ / $AEF_{c,bin}$	3.3	%
Tj = + 30 °C		9.2	kW	Tj = + 30 °C		4.5	%
Tj = + 25 °C		5.9	kW	Tj = + 25 °C		7.0	%
Tj = + 20 °C		4.1	kW	Tj = + 20 °C		10.5	%
Degradation co- efficient for air conditioners**	C_{dc}	0.25	-				
Power consumption in modes other than 'active mode'							
Off mode	P_{OFF}	0.012	kW	Crankcase heater mode	P_{CK}	0.000	kW
Thermostat-off mode	P_{TO}	0.000	kW	Standby mode	P_{SB}	0.012	kW
Other items							
Capacity control		variable		For air-to-air air conditioner: air flow rate, outdoor		5160	m³/h
Sound power level, outdoor	L_{WA}	73.0	dB				
Sound power level, indoor	L_{WA}	56.0	dB	if engine driven: Emissions of nitrogen oxides	NO_x***	-	mg/kWh fuel input GCV
				GWP of the refrigerant		675	kg CO_2 eq (100 years)
Contact details	Panasonic Testing Centre, Panasonic Marketing Europe GmbH Winsbergring 15, 22525 Hamburg, Germany						

** If C_{dc} is not determined by measurement then the default degradation coefficient air conditioners shall be 0,25.
*** from 26 September 2018.
Where information relates to multi-split air conditioners, the test result and performance data may be obtained on the basis of the performance of the outdoor unit, with a combination of indoor unit(s) recommended by the manufacturer or importer.
**** Refer to Information requirements for UnitList

Information requirements for heat pumps

Model(s):	Outdoor Unit	U-125PZ2E5
	Indoor Unit	S-60PT2E5B x2
Outdoor side heat exchanger of heat pump:		air
Indoor side heat exchanger of heat pump:		air
Indication if the heater is equipped with a supplementary heater:		no
if applicable: driver of compressor: [electric motor or fuel driven, gaseous or liquid fuel, internal or external combustion engine]		electric motor

Parameters shall be declared for the average heating season, parameters for the warmer and colder heating seasons are optional.

Item	Symbol	Value	Unit	Item	Symbol	Value	Unit
Rated heating capacity	$P_{rated,h}$	12.5	kW	Seasonal space heating energy efficiency	$\eta_{s,h}$	147.6	%
Refrigeration load	$P_{design,h}$	12.5	kW				
Declared heating capacity for part load at indoor temperature 20 °C and outdoor temperature Tj				Declared coefficient of performance or gas utilization efficiency / auxiliary energy factor for part load at given outdoor temperatures Tj			
Tj = - 7 °C	P_{dh}	11.0	kW	Tj = - 7 °C	COP_d or $GUE_{h,bin}$ / $AEF_{h,bin}$	2.2	%
Tj = + 2 °C		6.7	kW	Tj = + 2 °C		3.5	%
Tj = + 7 °C		4.3	kW	Tj = + 7 °C		5.8	%
Tj = + 12 °C		3.8	kW	Tj = + 12 °C		7.1	%
T_{biv} = bivalent temperature		11.0	kW	T_{biv} = bivalent temperature		2.2	%
T_{OL} = operation limit		7.5	kW	T_{OL} = operation limit		1.5	%
For air-to-water heat pumps: Tj = - 15 °C (if T_{OL} < - 20 °C)		-	kW	For water-to-air heat pumps: T_j = - 15 °C (if T_{OL} < -20 °C)		-	%
Bivalent temperature	T_{biv}	-7	°C	For water-to-air heat pumps: Operation limit temperature	T_{OL}	-15	°C
Degradation co- efficient heat pumps**	C_{dh}	0.25	-				
Power consumption in modes other than 'active mode'				Supplementary heater			
Off mode	P_{OFF}	0.012	kW	back-up heating capacity *	elbu	2.9	kW
Thermostat-off mode	P_{TO}	0.000	kW	Type of energy input			
Crankcase heater mode	P_{CK}	0.000	kW	Standby mode	P_{SB}	0.012	kW
Other items							
Capacity control		variable		For air-to-air heat pumps: air flow rate,outdoor		4680	m³/h
Sound power level, outdoor	L_{WA}	73.0	dB	For water-/brine-to-air heat pumps: Rated brine or water flow rate, outdoor side heat exchanger		-	m³/h
Sound power level, indoor	L_{WA}	56.0	dB	Emissions of nitrogen oxides (if applicable)	NO_x***	-	mg/kWh fuel input GCV
				GWP of the refrigerant		675	kg CO_2 eq (100 years)
Contact details	Panasonic Testing Centre, Panasonic Marketing Europe GmbH Winsbergring 15, 22525 Hamburg, Germany						

** If C_{dh} is not determined by measurement then the default degradation coefficient of heat pumps shall be 0,25.
*** from 26 September 2018.
Where information relates to multi-split heat pumps, the test result and performance data may be obtained on the basis of the performance of the outdoor unit, with a combination of indoor unit(s) recommended by the manufacturer or importer.
**** Refer to Information requirements for UnitList

Information requirements for air-to-air air conditioners

Model(s):	Outdoor Unit	U-140PZ2E5
	Indoor Unit	S-71PT2E5B x2
Outdoor side heat exchanger of air conditioner:		air
Indoor side heat exchanger of air conditioner:		air
Type: compressor driven vapour compression or sorption process		vapour compression
if applicable: driver of compressor: [electric motor or fuel driven, gaseous or liquid fuel, internal or external combustion engine]		electric motor

Item	Symbol	Value	Unit	Item	Symbol	Value	Unit
Rated cooling capacity	$P_{rated,c}$	14.0	kW	Seasonal space cooling energy efficiency	$\eta_{s,c}$	227.5	%
Refrigeration load	$P_{design,c}$	14.0	kW				
Declared cooling capacity for part load at given outdoor temperatures Tj and indoor 27°/19°C (dry/wet bulb)				Declared energy efficiency ratio or gas utilization efficiency / auxiliary energy factor for part load at given outdoor temperatures Tj			
Tj= + 35 °C	Pdc	14.0	kW	Tj = + 35 °C	EER_d or $GUE_{c,bin}$ / $AEF_{c,bin}$	2.9	%
Tj = + 30 °C		10.3	kW	Tj = + 30 °C		4.3	%
Tj = + 25 °C		6.6	kW	Tj = + 25 °C		6.5	%
Tj = + 20 °C		3.8	kW	Tj = + 20 °C		10.0	%
Degradation co- efficient for air conditioners**	C_{dc}	0.25	-				
Power consumption in modes other than 'active mode'							
Off mode	P_{OFF}	0.012	kW	Crankcase heater mode	P_{CK}	0.000	kW
Thermostat-off mode	P_{TO}	0.000	kW	Standby mode	P_{SB}	0.012	kW
Other items							
Capacity control		variable		For air-to-air air conditioner: air flow rate, outdoor		5340	m³/h
Sound power level, outdoor	L_{WA}	74.0	dB				
Sound power level, indoor	L_{WA}	57.0	dB	if engine driven: Emissions of nitrogen oxides	NO_x***	-	mg/kWh fuel input GCV
				GWP of the refrigerant		675	kg CO_2 eq (100 years)
Contact details	Panasonic Testing Centre, Panasonic Marketing Europe GmbH Winsbergring 15, 22525 Hamburg, Germany						

** If C_{dc} is not determined by measurement then the default degradation coefficient air conditioners shall be 0,25.
*** from 26 September 2018.
Where information relates to multi-split air conditioners, the test result and performance data may be obtained on the basis of the performance of the outdoor unit, with a combination of indoor unit(s) recommended by the manufacturer or importer.
**** Refer to Information requirements for UnitList

Information requirements for heat pumps

Model(s):	Outdoor Unit	U-140PZ2E5
	Indoor Unit	S-71PT2E5B x2
Outdoor side heat exchanger of heat pump:		air
Indoor side heat exchanger of heat pump:		air
Indication if the heater is equipped with a supplementary heater:		no
if applicable: driver of compressor: [electric motor or fuel driven, gaseous or liquid fuel, internal or external combustion engine]		electric motor

Parameters shall be declared for the average heating season, parameters for the warmer and colder heating seasons are optional.

Item	Symbol	Value	Unit	Item	Symbol	Value	Unit
Rated heating capacity	$P_{rated,h}$	14.0	kW	Seasonal space heating energy efficiency	$\eta_{s,h}$	145.4	%
Refrigeration load	$P_{design,h}$	13.6	kW				
Declared heating capacity for part load at indoor temperature 20 °C and outdoor temperature Tj				Declared coefficient of performance or gas utilization efficiency / auxiliary energy factor for part load at given outdoor temperatures Tj			
Tj = - 7 °C	P_{dh}	12.0	kW	Tj = - 7 °C	COP_d or $GUE_{h,bin}$ / $AEF_{h,bin}$	2.2	%
Tj = + 2 °C		7.3	kW	Tj = + 2 °C		3.4	%
Tj = + 7 °C		4.7	kW	Tj = + 7 °C		5.8	%
Tj = + 12 °C		3.9	kW	Tj = + 12 °C		7.1	%
T_{biv} = bivalent temperature		12.0	kW	T_{biv} = bivalent temperature		2.2	%
T_{OL} = operation limit		7.9	kW	T_{OL} = operation limit		1.5	%
For air-to-water heat pumps: Tj = - 15 °C (if T_{OL} < - 20 °C)		-	kW	For water-to-air heat pumps: T_j = - 15 °C (if T_{OL} < -20 °C)		-	%
Bivalent temperature	T_{biv}	-7	°C	For water-to-air heat pumps: Operation limit temperature	T_{OL}	-15	°C
Degradation co- efficient heat pumps**	C_{dh}	0.25	-				
Power consumption in modes other than 'active mode'				Supplementary heater			
Off mode	P_{OFF}	0.012	kW	back-up heating capacity *	elbu	3.2	kW
Thermostat-off mode	P_{TO}	0.000	kW	Type of energy input			
Crankcase heater mode	P_{CK}	0.000	kW	Standby mode	P_{SB}	0.015	kW
Other items							
Capacity control		variable		For air-to-air heat pumps: air flow rate,outdoor		4980	m³/h
Sound power level, outdoor	L_{WA}	74.0	dB	For water-/brine-to-air heat pumps: Rated brine or water flow rate, outdoor side heat exchanger		-	m³/h
Sound power level, indoor	L_{WA}	57.0	dB	Emissions of nitrogen oxides (if applicable)	NO_x***	-	mg/kWh fuel input GCV
				GWP of the refrigerant		675	kg CO_2 eq (100 years)
Contact details	Panasonic Testing Centre, Panasonic Marketing Europe GmbH Winsbergring 15, 22525 Hamburg, Germany						

** If C_{dh} is not determined by measurement then the default degradation coefficient of heat pumps shall be 0,25.
*** from 26 September 2018.
Where information relates to multi-split heat pumps, the test result and performance data may be obtained on the basis of the performance of the outdoor unit, with a combination of indoor unit(s) recommended by the manufacturer or importer.
**** Refer to Information requirements for UnitList

Information requirements for air-to-air air conditioners

Model(s):	Outdoor Unit	U-125PZ2E5
	Indoor Unit	S-125PT2E5B
Outdoor side heat exchanger of air conditioner:		air
Indoor side heat exchanger of air conditioner:		air
Type: compressor driven vapour compression or sorption process		vapour compression
if applicable: driver of compressor: [electric motor or fuel driven, gaseous or liquid fuel, internal or external combustion engine]		electric motor

Item	Symbol	Value	Unit	Item	Symbol	Value	Unit
Rated cooling capacity	$P_{rated,c}$	12.5	kW	Seasonal space cooling energy efficiency	$\eta_{s,c}$	227.8	%
Refrigeration load	$P_{design,c}$	12.5	kW				
Declared cooling capacity for part load at given outdoor temperatures Tj and indoor 27º/19ºC (dry/wet bulb)				Declared energy efficiency ratio or gas utilization efficiency / auxiliary energy factor for part load at given outdoor temperatures Tj			
Tj= + 35 ºC	Pdc	12.5	kW	Tj = + 35 ºC	EER_d or $GUE_{c,bin}$ / $AEF_{c,bin}$	3.3	%
Tj = + 30 ºC		9.2	kW	Tj = + 30 ºC		4.5	%
Tj = + 25 ºC		5.9	kW	Tj = + 25 ºC		7.0	%
Tj = + 20 ºC		4.1	kW	Tj = + 20 ºC		11.3	%
Degradation co- efficient for air conditioners**	C_{dc}	0.25	-				
Power consumption in modes other than 'active mode'							
Off mode	P_{OFF}	0.017	kW	Crankcase heater mode	P_{CK}	0.000	kW
Thermostat-off mode	P_{TO}	0.125	kW	Standby mode	P_{SB}	0.017	kW
Other items							
Capacity control		variable		For air-to-air air conditioner: air flow rate, outdoor		5160	m³/h
Sound power level, outdoor	L_{WA}	73.0	dB				
Sound power level, indoor	L_{WA}	64.0	dB	if engine driven: Emissions of nitrogen oxides	NO_x***	-	mg/kWh fuel input GCV
				GWP of the refrigerant		675	kg CO_2 eq (100 years)
Contact details	Panasonic Testing Centre, Panasonic Marketing Europe GmbH Winsbergring 15, 22525 Hamburg, Germany						

** If C_{dc} is not determined by measurement then the default degradation coefficient air conditioners shall be 0,25.
*** from 26 September 2018.
Where information relates to multi-split air conditioners, the test result and performance data may be obtained on the basis of the performance of the outdoor unit, with a combination of indoor unit(s) recommended by the manufacturer or importer.
**** Refer to Information requirements for UnitList

Information requirements for heat pumps

Model(s):	Outdoor Unit	U-125PZ2E5
	Indoor Unit	S-125PT2E5B
Outdoor side heat exchanger of heat pump:		air
Indoor side heat exchanger of heat pump:		air
Indication if the heater is equipped with a supplementary heater:		no
if applicable: driver of compressor: [electric motor or fuel driven, gaseous or liquid fuel, internal or external combustion engine]		electric motor

Parameters shall be declared for the average heating season, parameters for the warmer and colder heating seasons are optional.

Item	Symbol	Value	Unit	Item	Symbol	Value	Unit
Rated heating capacity	$P_{rated,h}$	12.5	kW	Seasonal space heating energy efficiency	$\eta_{s,h}$	146.9	%
Refrigeration load	$P_{design,h}$	12.5	kW				
Declared heating capacity for part load at indoor temperature 20 °C and outdoor temperature Tj				Declared coefficient of performance or gas utilization efficiency / auxiliary energy factor for part load at given outdoor temperatures Tj			
Tj = - 7 ºC	P_{dh}	11.0	kW	Tj = - 7 ºC	COP_d or $GUE_{h,bin}$ / $AEF_{h,bin}$	2.2	%
Tj = + 2 ºC		6.7	kW	Tj = + 2 ºC		3.5	%
Tj = + 7 ºC		4.3	kW	Tj = + 7 ºC		5.8	%
Tj = + 12 ºC		3.8	kW	Tj = + 12 ºC		7.1	%
T_{biv} = bivalent temperature		11.0	kW	T_{biv} = bivalent temperature		2.2	%
T_{OL} = operation limit		8.0	kW	T_{OL} = operation limit		1.5	%
For air-to-water heat pumps: Tj = - 15 ºC (if T_{OL} < - 20 ºC)		-	kW	For water-to-air heat pumps: T_j = - 15 ºC (if T_{OL} < -20 ºC)		-	%
Bivalent temperature	T_{biv}	-7	ºC	For water-to-air heat pumps: Operation limit temperature	T_{OL}	-15	℃
Degradation co- efficient heat pumps**	C_{dh}	0.25	-				
Power consumption in modes other than 'active mode'				Supplementary heater			
Off mode	P_{OFF}	0.017	kW	back-up heating capacity *	elbu	2.7	kW
Thermostat-off mode	P_{TO}	0.125	kW	Type of energy input			
Crankcase heater mode	P_{CK}	0.000	kW	Standby mode	P_{SB}	0.017	kW
Other items							
Capacity control		variable		For air-to-air heat pumps: air flow rate,outdoor		4680	m³/h
Sound power level, outdoor	L_{WA}	73.0	dB	For water-/brine-to-air heat pumps: Rated brine or water flow rate, outdoor side heat exchanger		-	m³/h
Sound power level, indoor	L_{WA}	64.0	dB	Emissions of nitrogen oxides (if applicable)	NO_x***	-	mg/kWh fuel input GCV
				GWP of the refrigerant		675	kg CO_2 eq (100 years)
Contact details	Panasonic Testing Centre, Panasonic Marketing Europe GmbH Winsbergring 15, 22525 Hamburg, Germany						

** If C_{dh} is not determined by measurement then the default degradation coefficient of heat pumps shall be 0,25.
*** from 26 September 2018.
Where information relates to multi-split heat pumps, the test result and performance data may be obtained on the basis of the performance of the outdoor unit, with a combination of indoor unit(s) recommended by the manufacturer or importer.
**** Refer to Information requirements for UnitList

Information requirements for air-to-air air conditioners

Model(s):	Outdoor Unit	U-140PZ2E5
	Indoor Unit	S-140PT2E5B
Outdoor side heat exchanger of air conditioner:		air
Indoor side heat exchanger of air conditioner:		air
Type: compressor driven vapour compression or sorption process		vapour compression
if applicable: driver of compressor: [electric motor or fuel driven, gaseous or liquid fuel, internal or external combustion engine]		electric motor

Item	Symbol	Value	Unit	Item	Symbol	Value	Unit
Rated cooling capacity	$P_{rated,c}$	14.0	kW	Seasonal space cooling energy efficiency	$\eta_{s,c}$	216.6	%
Refrigeration load	$P_{design,c}$	14.0	kW				
Declared cooling capacity for part load at given outdoor temperatures Tj and indoor 27º/19ºC (dry/wet bulb)				Declared energy efficiency ratio or gas utilization efficiency / auxiliary energy factor for part load at given outdoor temperatures Tj			
Tj= + 35 ºC	Pdc	14.0	kW	Tj = + 35 ºC	EER_d or $GUE_{c,bin}$ / $AEF_{c,bin}$	2.9	%
Tj = + 30 ºC		10.3	kW	Tj = + 30 ºC		4.3	%
Tj = + 25 ºC		6.6	kW	Tj = + 25 ºC		6.5	%
Tj = + 20 ºC		3.8	kW	Tj = + 20 ºC		10.9	%
Degradation co- efficient for air conditioners**	C_{dc}	0.25	-				
Power consumption in modes other than 'active mode'							
Off mode	P_{OFF}	0.017	kW	Crankcase heater mode	P_{CK}	0.000	kW
Thermostat-off mode	P_{TO}	0.135	kW	Standby mode	P_{SB}	0.017	kW
Other items							
Capacity control		variable		For air-to-air air conditioner: air flow rate, outdoor		5340	m³/h
Sound power level, outdoor	L_{WA}	74.0	dB				
Sound power level, indoor	L_{WA}	65.0	dB	if engine driven: Emissions of nitrogen oxides	NO_x***	-	mg/kWh fuel input GCV
				GWP of the refrigerant		675	kg CO_2 eq (100 years)
Contact details	Panasonic Testing Centre, Panasonic Marketing Europe GmbH Winsbergring 15, 22525 Hamburg, Germany						

** If C_{dc} is not determined by measurement then the default degradation coefficient air conditioners shall be 0,25.
*** from 26 September 2018.
Where information relates to multi-split air conditioners, the test result and performance data may be obtained on the basis of the performance of the outdoor unit, with a combination of indoor unit(s) recommended by the manufacturer or importer.
**** Refer to Information requirements for UnitList

Information requirements for heat pumps

Model(s):	Outdoor Unit	U-140PZ2E5
	Indoor Unit	S-140PT2E5B
Outdoor side heat exchanger of heat pump:		air
Indoor side heat exchanger of heat pump:		air
Indication if the heater is equipped with a supplementary heater:		no
if applicable: driver of compressor: [electric motor or fuel driven, gaseous or liquid fuel, internal or external combustion engine]		electric motor

Parameters shall be declared for the average heating season, parameters for the warmer and colder heating seasons are optional.

Item	Symbol	Value	Unit	Item	Symbol	Value	Unit
Rated heating capacity	$P_{rated,h}$	14.0	kW	Seasonal space heating energy efficiency	$\eta_{s,h}$	144.8	%
Refrigeration load	$P_{design,h}$	13.6	kW				
Declared heating capacity for part load at indoor temperature 20 °C and outdoor temperature Tj				Declared coefficient of performance or gas utilization efficiency / auxiliary energy factor for part load at given outdoor temperatures Tj			
Tj = - 7 ºC	P_{dh}	12.0	kW	Tj = - 7 ºC	COP_d or $GUE_{h,bin}$ / $AEF_{h,bin}$	2.2	%
Tj = + 2 ºC		7.3	kW	Tj = + 2 ºC		3.4	%
Tj = + 7 ºC		4.7	kW	Tj = + 7 ºC		5.8	%
Tj = + 12 ºC		3.9	kW	Tj = + 12 ºC		7.1	%
T_{biv} = bivalent temperature		12.0	kW	T_{biv} = bivalent temperature		2.2	%
T_{OL} = operation limit		8.4	kW	T_{OL} = operation limit		1.5	%
For air-to-water heat pumps: Tj = - 15 ºC (if T_{OL} < - 20 ºC)		-	kW	For water-to-air heat pumps: T_j = - 15 ºC (if T_{OL} < -20 ºC)		-	%
Bivalent temperature	T_{biv}	-7	ºC	For water-to-air heat pumps: Operation limit temperature	T_{OL}	-15	℃
Degradation co- efficient heat pumps**	C_{dh}	0.25	-				
Power consumption in modes other than 'active mode'				Supplementary heater			
Off mode	P_{OFF}	0.017	kW	back-up heating capacity *	elbu	3.0	kW
Thermostat-off mode	P_{TO}	0.135	kW	Type of energy input			
Crankcase heater mode	P_{CK}	0.000	kW	Standby mode	P_{SB}	0.017	kW
Other items							
Capacity control		variable		For air-to-air heat pumps: air flow rate,outdoor		4980	m³/h
Sound power level, outdoor	L_{WA}	74.0	dB	For water-/brine-to-air heat pumps: Rated brine or water flow rate, outdoor side heat exchanger		-	m³/h
Sound power level, indoor	L_{WA}	65.0	dB	Emissions of nitrogen oxides (if applicable)	NO_x***	-	mg/kWh fuel input GCV
				GWP of the refrigerant		675	kg CO_2 eq (100 years)
Contact details	Panasonic Testing Centre, Panasonic Marketing Europe GmbH Winsbergring 15, 22525 Hamburg, Germany						

** If C_{dh} is not determined by measurement then the default degradation coefficient of heat pumps shall be 0,25.
*** from 26 September 2018.
Where information relates to multi-split heat pumps, the test result and performance data may be obtained on the basis of the performance of the outdoor unit, with a combination of indoor unit(s) recommended by the manufacturer or importer.
**** Refer to Information requirements for UnitList

Information requirements for air-to-air air conditioners

Model(s):	Outdoor Unit	U-125PZ2E8
	Indoor Unit	S-60PT2E5B x2
Outdoor side heat exchanger of air conditioner:		air
Indoor side heat exchanger of air conditioner:		air
Type: compressor driven vapour compression or sorption process		vapour compression
if applicable: driver of compressor: [electric motor or fuel driven, gaseous or liquid fuel, internal or external combustion engine]		electric motor

Item	Symbol	Value	Unit	Item	Symbol	Value	Unit
Rated cooling capacity	$P_{rated,c}$	12.5	kW	Seasonal space cooling energy efficiency	$\eta_{s,c}$	240.5	%
Refrigeration load	$P_{design,c}$	12.5	kW				
Declared cooling capacity for part load at given outdoor temperatures Tj and indoor 27º/19ºC (dry/wet bulb)				Declared energy efficiency ratio or gas utilization efficiency / auxiliary energy factor for part load at given outdoor temperatures Tj			
Tj= + 35 ºC	Pdc	12.5	kW	Tj = + 35 ºC	EER_d or $GUE_{c,bin}$ / $AEF_{c,bin}$	3.3	%
Tj = + 30 ºC		9.2	kW	Tj = + 30 ºC		4.5	%
Tj = + 25 ºC		5.9	kW	Tj = + 25 ºC		7.0	%
Tj = + 20 ºC		4.1	kW	Tj = + 20 ºC		10.5	%
Degradation co- efficient for air conditioners**	C_{dc}	0.25	-				
Power consumption in modes other than 'active mode'							
Off mode	P_{OFF}	0.015	kW	Crankcase heater mode	P_{CK}	0.000	kW
Thermostat-off mode	P_{TO}	0.000	kW	Standby mode	P_{SB}	0.015	kW
Other items							
Capacity control		variable		For air-to-air air conditioner: air flow rate, outdoor		5160	m³/h
Sound power level, outdoor	L_{WA}	73.0	dB				
Sound power level, indoor	L_{WA}	56.0	dB	if engine driven: Emissions of nitrogen oxides	NO_x***	-	mg/kWh fuel input GCV
				GWP of the refrigerant		675	kg CO_2 eq (100 years)
Contact details	Panasonic Testing Centre, Panasonic Marketing Europe GmbH Winsbergring 15, 22525 Hamburg, Germany						

** If C_{dc} is not determined by measurement then the default degradation coefficient air conditioners shall be 0,25.
*** from 26 September 2018.
Where information relates to multi-split air conditioners, the test result and performance data may be obtained on the basis of the performance of the outdoor unit, with a combination of indoor unit(s) recommended by the manufacturer or importer.
**** Refer to Information requirements for UnitList

Information requirements for heat pumps

Model(s):	Outdoor Unit	U-125PZ2E8
	Indoor Unit	S-60PT2E5B x2
Outdoor side heat exchanger of heat pump:		air
Indoor side heat exchanger of heat pump:		air
Indication if the heater is equipped with a supplementary heater:		no
if applicable: driver of compressor: [electric motor or fuel driven, gaseous or liquid fuel, internal or external combustion engine]		electric motor

Parameters shall be declared for the average heating season, parameters for the warmer and colder heating seasons are optional.

Item	Symbol	Value	Unit	Item	Symbol	Value	Unit
Rated heating capacity	$P_{rated,h}$	12.5	kW	Seasonal space heating energy efficiency	$\eta_{s,h}$	147.6	%
Refrigeration load	$P_{design,h}$	12.5	kW				
Declared heating capacity for part load at indoor temperature 20 °C and outdoor temperature Tj				Declared coefficient of performance or gas utilization efficiency / auxiliary energy factor for part load at given outdoor temperatures Tj			
Tj = - 7 ºC	P_{dh}	11.0	kW	Tj = - 7 ºC	COP_d or $GUE_{h,bin}$ / $AEF_{h,bin}$	2.2	%
Tj = + 2 ºC		6.7	kW	Tj = + 2 ºC		3.5	%
Tj = + 7 ºC		4.3	kW	Tj = + 7 ºC		5.8	%
Tj = + 12 ºC		3.8	kW	Tj = + 12 ºC		7.1	%
T_{biv} = bivalent temperature		11.0	kW	T_{biv} = bivalent temperature		2.2	%
T_{OL} = operation limit		7.5	kW	T_{OL} = operation limit		1.5	%
For air-to-water heat pumps: Tj = - 15 ºC (if T_{OL} < - 20 ºC)		-	kW	For water-to-air heat pumps: T_j = - 15 ºC (if T_{OL} < -20 ºC)		-	%
Bivalent temperature	T_{biv}	-7	ºC	For water-to-air heat pumps: Operation limit temperature	T_{OL}	-15	℃
Degradation co- efficient heat pumps**	C_{dh}	0.25	-				
Power consumption in modes other than 'active mode'				Supplementary heater			
Off mode	P_{OFF}	0.015	kW	back-up heating capacity *	elbu	2.9	kW
Thermostat-off mode	P_{TO}	0.000	kW	Type of energy input			
Crankcase heater mode	P_{CK}	0.000	kW	Standby mode	P_{SB}	0.015	kW
Other items							
Capacity control		variable		For air-to-air heat pumps: air flow rate,outdoor		4680	m³/h
Sound power level, outdoor	L_{WA}	73.0	dB	For water-/brine-to-air heat pumps: Rated brine or water flow rate, outdoor side heat exchanger		-	m³/h
Sound power level, indoor	L_{WA}	56.0	dB	Emissions of nitrogen oxides (if applicable)	NO_x***	-	mg/kWh fuel input GCV
				GWP of the refrigerant		675	kg CO_2 eq (100 years)
Contact details	Panasonic Testing Centre, Panasonic Marketing Europe GmbH Winsbergring 15, 22525 Hamburg, Germany						

** If C_{dh} is not determined by measurement then the default degradation coefficient of heat pumps shall be 0,25.
*** from 26 September 2018.
Where information relates to multi-split heat pumps, the test result and performance data may be obtained on the basis of the performance of the outdoor unit, with a combination of indoor unit(s) recommended by the manufacturer or importer.
**** Refer to Information requirements for UnitList

Information requirements for air-to-air air conditioners

Model(s):	Outdoor Unit	U-140PZ2E8
	Indoor Unit	S-71PT2E5B x2
Outdoor side heat exchanger of air conditioner:		air
Indoor side heat exchanger of air conditioner:		air
Type: compressor driven vapour compression or sorption process		vapour compression
if applicable: driver of compressor: [electric motor or fuel driven, gaseous or liquid fuel, internal or external combustion engine]		electric motor

Item	Symbol	Value	Unit	Item	Symbol	Value	Unit
Rated cooling capacity	$P_{rated,c}$	14.0	kW	Seasonal space cooling energy efficiency	$\eta_{s,c}$	226.9	%
Refrigeration load	$P_{design,c}$	14.0	kW				
Declared cooling capacity for part load at given outdoor temperatures Tj and indoor 27º/19ºC (dry/wet bulb)				Declared energy efficiency ratio or gas utilization efficiency / auxiliary energy factor for part load at given outdoor temperatures Tj			
Tj= + 35 ºC	Pdc	14.0	kW	Tj = + 35 ºC	EER_d or $GUE_{c,bin}$ / $AEF_{c,bin}$	2.9	%
Tj = + 30 ºC		10.3	kW	Tj = + 30 ºC		4.3	%
Tj = + 25 ºC		6.6	kW	Tj = + 25 ºC		6.5	%
Tj = + 20 ºC		3.8	kW	Tj = + 20 ºC		10.0	%
Degradation co- efficient for air conditioners**	C_{dc}	0.25	-				
Power consumption in modes other than 'active mode'							
Off mode	P_{OFF}	0.015	kW	Crankcase heater mode	P_{CK}	0.000	kW
Thermostat-off mode	P_{TO}	0.000	kW	Standby mode	P_{SB}	0.015	kW
Other items							
Capacity control		variable		For air-to-air air conditioner: air flow rate, outdoor		5340	m³/h
Sound power level, outdoor	L_{WA}	74.0	dB				
Sound power level, indoor	L_{WA}	57.0	dB	if engine driven: Emissions of nitrogen oxides	NO_x***	-	mg/kWh fuel input GCV
				GWP of the refrigerant		675	kg CO_2 eq (100 years)
Contact details	Panasonic Testing Centre, Panasonic Marketing Europe GmbH Winsbergring 15, 22525 Hamburg, Germany						

** If C_{dc} is not determined by measurement then the default degradation coefficient air conditioners shall be 0,25.
*** from 26 September 2018.
Where information relates to multi-split air conditioners, the test result and performance data may be obtained on the basis of the performance of the outdoor unit, with a combination of indoor unit(s) recommended by the manufacturer or importer.
**** Refer to Information requirements for UnitList

Information requirements for heat pumps

Model(s):	Outdoor Unit	U-140PZ2E8
	Indoor Unit	S-71PT2E5B x2
Outdoor side heat exchanger of heat pump:		air
Indoor side heat exchanger of heat pump:		air
Indication if the heater is equipped with a supplementary heater:		no
if applicable: driver of compressor: [electric motor or fuel driven, gaseous or liquid fuel, internal or external combustion engine]		electric motor

Parameters shall be declared for the average heating season, parameters for the warmer and colder heating seasons are optional.

Item	Symbol	Value	Unit	Item	Symbol	Value	Unit
Rated heating capacity	$P_{rated,h}$	14.0	kW	Seasonal space heating energy efficiency	$\eta_{s,h}$	145.4	%
Refrigeration load	$P_{design,h}$	13.6	kW				
Declared heating capacity for part load at indoor temperature 20 °C and outdoor temperature Tj				Declared coefficient of performance or gas utilization efficiency / auxiliary energy factor for part load at given outdoor temperatures Tj			
Tj = - 7 ºC	P_{dh}	12.0	kW	Tj = - 7 ºC	COP_d or $GUE_{h,bin}$ / $AEF_{h,bin}$	2.2	%
Tj = + 2 ºC		7.3	kW	Tj = + 2 ºC		3.4	%
Tj = + 7 ºC		4.7	kW	Tj = + 7 ºC		5.8	%
Tj = + 12 ºC		3.9	kW	Tj = + 12 ºC		7.1	%
T_{biv} = bivalent temperature		12.0	kW	T_{biv} = bivalent temperature		2.2	%
T_{OL} = operation limit		7.9	kW	T_{OL} = operation limit		1.5	%
For air-to-water heat pumps: Tj = - 15 ºC (if T_{OL} < - 20 ºC)		-	kW	For water-to-air heat pumps: T_j = - 15 ºC (if T_{OL} < -20 ºC)		-	%
Bivalent temperature	T_{biv}	-7	ºC	For water-to-air heat pumps: Operation limit temperature	T_{OL}	-15	℃
Degradation co- efficient heat pumps**	C_{dh}	0.25	-				
Power consumption in modes other than 'active mode'				Supplementary heater			
Off mode	P_{OFF}	0.015	kW	back-up heating capacity *	elbu	3.2	kW
Thermostat-off mode	P_{TO}	0.000	kW	Type of energy input			
Crankcase heater mode	P_{CK}	0.000	kW	Standby mode	P_{SB}	0.015	kW
Other items							
Capacity control		variable		For air-to-air heat pumps: air flow rate,outdoor		4980	m³/h
Sound power level, outdoor	L_{WA}	74.0	dB	For water-/brine-to-air heat pumps: Rated brine or water flow rate, outdoor side heat exchanger		-	m³/h
Sound power level, indoor	L_{WA}	57.0	dB	Emissions of nitrogen oxides (if applicable)	NO_x***	-	mg/kWh fuel input GCV
				GWP of the refrigerant		675	kg CO_2 eq (100 years)
Contact details	Panasonic Testing Centre, Panasonic Marketing Europe GmbH Winsbergring 15, 22525 Hamburg, Germany						

** If C_{dh} is not determined by measurement then the default degradation coefficient of heat pumps shall be 0,25.
*** from 26 September 2018.
Where information relates to multi-split heat pumps, the test result and performance data may be obtained on the basis of the performance of the outdoor unit, with a combination of indoor unit(s) recommended by the manufacturer or importer.
**** Refer to Information requirements for UnitList

Information requirements for air-to-air air conditioners

Model(s):	Outdoor Unit	U-125PZ2E8
	Indoor Unit	S-125PT2E5B
Outdoor side heat exchanger of air conditioner:		air
Indoor side heat exchanger of air conditioner:		air
Type: compressor driven vapour compression or sorption process		vapour compression
if applicable: driver of compressor: [electric motor or fuel driven, gaseous or liquid fuel, internal or external combustion engine]		electric motor

Item	Symbol	Value	Unit	Item	Symbol	Value	Unit
Rated cooling capacity	$P_{rated,c}$	12.5	kW	Seasonal space cooling energy efficiency	$\eta_{s,c}$	227.1	%
Refrigeration load	$P_{design,c}$	12.5	kW				
Declared cooling capacity for part load at given outdoor temperatures Tj and indoor 27°/19°C (dry/wet bulb)				Declared energy efficiency ratio or gas utilization efficiency / auxiliary energy factor for part load at given outdoor temperatures Tj			
Tj= + 35 °C	Pdc	12.5	kW	Tj = + 35 °C	EER_d or $GUE_{c,bin}$ / $AEF_{c,bin}$	3.3	%
Tj = + 30 °C		9.2	kW	Tj = + 30 °C		4.5	%
Tj = + 25 °C		5.9	kW	Tj = + 25 °C		7.0	%
Tj = + 20 °C		4.1	kW	Tj = + 20 °C		11.3	%
Degradation co- efficient for air conditioners**	C_{dc}	0.25	-				
Power consumption in modes other than 'active mode'							
Off mode	P_{OFF}	0.020	kW	Crankcase heater mode	P_{CK}	0.000	kW
Thermostat-off mode	P_{TO}	0.125	kW	Standby mode	P_{SB}	0.020	kW
Other items							
Capacity control		variable		For air-to-air air conditioner: air flow rate, outdoor		5160	m³/h
Sound power level, outdoor	L_{WA}	73.0	dB				
Sound power level, indoor	L_{WA}	64.0	dB	if engine driven: Emissions of nitrogen oxides	NO_x***	-	mg/kWh fuel input GCV
				GWP of the refrigerant		675	kg CO_2 eq (100 years)
Contact details	Panasonic Testing Centre, Panasonic Marketing Europe GmbH Winsbergring 15, 22525 Hamburg, Germany						

** If C_{dc} is not determined by measurement then the default degradation coefficient air conditioners shall be 0,25.
*** from 26 September 2018.
Where information relates to multi-split air conditioners, the test result and performance data may be obtained on the basis of the performance of the outdoor unit, with a combination of indoor unit(s) recommended by the manufacturer or importer.
**** Refer to Information requirements for UnitList

Information requirements for heat pumps

Model(s):	Outdoor Unit	U-125PZ2E8
	Indoor Unit	S-125PT2E5B
Outdoor side heat exchanger of heat pump:		air
Indoor side heat exchanger of heat pump:		air
Indication if the heater is equipped with a supplementary heater:		no
if applicable: driver of compressor: [electric motor or fuel driven, gaseous or liquid fuel, internal or external combustion engine]		electric motor

Parameters shall be declared for the average heating season, parameters for the warmer and colder heating seasons are optional.

Item	Symbol	Value	Unit	Item	Symbol	Value	Unit
Rated heating capacity	$P_{rated,h}$	12.5	kW	Seasonal space heating energy efficiency	$\eta_{s,h}$	146.9	%
Refrigeration load	$P_{design,h}$	12.5	kW				
Declared heating capacity for part load at indoor temperature 20 °C and outdoor temperature Tj				Declared coefficient of performance or gas utilization efficiency / auxiliary energy factor for part load at given outdoor temperatures Tj			
Tj = - 7 °C	P_{dh}	11.0	kW	Tj = - 7 °C	COP_d or $GUE_{h,bin}$ / $AEF_{h,bin}$	2.2	%
Tj = + 2 °C		6.7	kW	Tj = + 2 °C		3.5	%
Tj = + 7 °C		4.3	kW	Tj = + 7 °C		5.8	%
Tj = + 12 °C		3.8	kW	Tj = + 12 °C		7.1	%
T_{biv} = bivalent temperature		11.0	kW	T_{biv} = bivalent temperature		2.2	%
T_{OL} = operation limit		8.0	kW	T_{OL} = operation limit		1.5	%
For air-to-water heat pumps: Tj = - 15 °C (if T_{OL} < - 20 °C)		-	kW	For water-to-air heat pumps: T_j = - 15 °C (if T_{OL} < -20 °C)		-	%
Bivalent temperature	T_{biv}	-7	°C	For water-to-air heat pumps: Operation limit temperature	T_{OL}	-15	°C
Degradation co- efficient heat pumps**	C_{dh}	0.25	-				
Power consumption in modes other than 'active mode'				Supplementary heater			
Off mode	P_{OFF}	0.020	kW	back-up heating capacity *	elbu	2.7	kW
Thermostat-off mode	P_{TO}	0.125	kW	Type of energy input			
Crankcase heater mode	P_{CK}	0.000	kW	Standby mode	P_{SB}	0.020	kW
Other items							
Capacity control		variable		For air-to-air heat pumps: air flow rate,outdoor		4680	m³/h
Sound power level, outdoor	L_{WA}	73.0	dB	For water-/brine-to-air heat pumps: Rated brine or water flow rate, outdoor side heat exchanger		-	m³/h
Sound power level, indoor	L_{WA}	64.0	dB	Emissions of nitrogen oxides (if applicable)	NO_x***	-	mg/kWh fuel input GCV
				GWP of the refrigerant		675	kg CO_2 eq (100 years)
Contact details	Panasonic Testing Centre, Panasonic Marketing Europe GmbH Winsbergring 15, 22525 Hamburg, Germany						

** If C_{dh} is not determined by measurement then the default degradation coefficient of heat pumps shall be 0,25.
*** from 26 September 2018.
Where information relates to multi-split heat pumps, the test result and performance data may be obtained on the basis of the performance of the outdoor unit, with a combination of indoor unit(s) recommended by the manufacturer or importer.
**** Refer to Information requirements for UnitList

Information requirements for air-to-air air conditioners

Model(s):	Outdoor Unit	U-140PZ2E8
	Indoor Unit	S-140PT2E5B
Outdoor side heat exchanger of air conditioner:		air
Indoor side heat exchanger of air conditioner:		air
Type: compressor driven vapour compression or sorption process		vapour compression
if applicable: driver of compressor: [electric motor or fuel driven, gaseous or liquid fuel, internal or external combustion engine]		electric motor

Item	Symbol	Value	Unit	Item	Symbol	Value	Unit
Rated cooling capacity	$P_{rated,c}$	14.0	kW	Seasonal space cooling energy efficiency	$\eta_{s,c}$	216.0	%
Refrigeration load	$P_{design,c}$	14.0	kW				
Declared cooling capacity for part load at given outdoor temperatures Tj and indoor 27º/19ºC (dry/wet bulb)				Declared energy efficiency ratio or gas utilization efficiency / auxiliary energy factor for part load at given outdoor temperatures Tj			
Tj= + 35 ºC	Pdc	14.0	kW	Tj = + 35 ºC	EER_d or $GUE_{c,bin}$ / $AEF_{c,bin}$	2.9	%
Tj = + 30 ºC		10.3	kW	Tj = + 30 ºC		4.3	%
Tj = + 25 ºC		6.6	kW	Tj = + 25 ºC		6.5	%
Tj = + 20 ºC		3.8	kW	Tj = + 20 ºC		10.9	%
Degradation co- efficient for air conditioners**	C_{dc}	0.25	-				
Power consumption in modes other than 'active mode'							
Off mode	P_{OFF}	0.020	kW	Crankcase heater mode	P_{CK}	0.000	kW
Thermostat-off mode	P_{TO}	0.135	kW	Standby mode	P_{SB}	0.020	kW
Other items							
Capacity control		variable		For air-to-air air conditioner: air flow rate, outdoor		5340	m³/h
Sound power level, outdoor	L_{WA}	74.0	dB				
Sound power level, indoor	L_{WA}	65.0	dB	if engine driven: Emissions of nitrogen oxides	NO_x***	-	mg/kWh fuel input GCV
				GWP of the refrigerant		675	kg CO_2 eq (100 years)
Contact details	Panasonic Testing Centre, Panasonic Marketing Europe GmbH Winsbergring 15, 22525 Hamburg, Germany						

** If C_{dc} is not determined by measurement then the default degradation coefficient air conditioners shall be 0,25.
*** from 26 September 2018.
Where information relates to multi-split air conditioners, the test result and performance data may be obtained on the basis of the performance of the outdoor unit, with a combination of indoor unit(s) recommended by the manufacturer or importer.
**** Refer to Information requirements for UnitList

Information requirements for heat pumps

Model(s):	Outdoor Unit	U-140PZ2E8
	Indoor Unit	S-140PT2E5B
Outdoor side heat exchanger of heat pump:		air
Indoor side heat exchanger of heat pump:		air
Indication if the heater is equipped with a supplementary heater:		no
if applicable: driver of compressor: [electric motor or fuel driven, gaseous or liquid fuel, internal or external combustion engine]		electric motor

Parameters shall be declared for the average heating season, parameters for the warmer and colder heating seasons are optional.

Item	Symbol	Value	Unit	Item	Symbol	Value	Unit
Rated heating capacity	$P_{rated,h}$	14.0	kW	Seasonal space heating energy efficiency	$\eta_{s,h}$	144.8	%
Refrigeration load	$P_{design,h}$	13.6	kW				
Declared heating capacity for part load at indoor temperature 20 °C and outdoor temperature Tj				Declared coefficient of performance or gas utilization efficiency / auxiliary energy factor for part load at given outdoor temperatures Tj			
Tj = - 7 ºC	P_{dh}	12.0	kW	Tj = - 7 ºC	COP_d or $GUE_{h,bin}$ / $AEF_{h,bin}$	2.2	%
Tj = + 2 ºC		7.3	kW	Tj = + 2 ºC		3.4	%
Tj = + 7 ºC		4.7	kW	Tj = + 7 ºC		5.8	%
Tj = + 12 ºC		3.9	kW	Tj = + 12 ºC		7.1	%
T_{biv} = bivalent temperature		12.0	kW	T_{biv} = bivalent temperature		2.2	%
T_{OL} = operation limit		8.4	kW	T_{OL} = operation limit		1.5	%
For air-to-water heat pumps: Tj = - 15 ºC (if T_{OL} < - 20 ºC)		-	kW	For water-to-air heat pumps: T_j = - 15 ºC (if T_{OL} < -20 ºC)		-	%
Bivalent temperature	T_{biv}	-7	ºC	For water-to-air heat pumps: Operation limit temperature	T_{OL}	-15	℃
Degradation co- efficient heat pumps**	C_{dh}	0.25	-				
Power consumption in modes other than 'active mode'				Supplementary heater			
Off mode	P_{OFF}	0.020	kW	back-up heating capacity *	elbu	3.0	kW
Thermostat-off mode	P_{TO}	0.135	kW	Type of energy input			
Crankcase heater mode	P_{CK}	0.000	kW	Standby mode	P_{SB}	0.020	kW
Other items							
Capacity control		variable		For air-to-air heat pumps: air flow rate,outdoor		4980	m³/h
Sound power level, outdoor	L_{WA}	74.0	dB	For water-/brine-to-air heat pumps: Rated brine or water flow rate, outdoor side heat exchanger		-	m³/h
Sound power level, indoor	L_{WA}	65.0	dB	Emissions of nitrogen oxides (if applicable)	NO_x***	-	mg/kWh fuel input GCV
				GWP of the refrigerant		675	kg CO_2 eq (100 years)
Contact details	Panasonic Testing Centre, Panasonic Marketing Europe GmbH Winsbergring 15, 22525 Hamburg, Germany						

** If C_{dh} is not determined by measurement then the default degradation coefficient of heat pumps shall be 0,25.
*** from 26 September 2018.
Where information relates to multi-split heat pumps, the test result and performance data may be obtained on the basis of the performance of the outdoor unit, with a combination of indoor unit(s) recommended by the manufacturer or importer.
**** Refer to Information requirements for UnitList

Information requirements for air-to-air air conditioners

Model(s):	Outdoor Unit	U-125PZ2E5
	Indoor Unit	S-60PK2E5B×2
Outdoor side heat exchanger of air conditioner:		air
Indoor side heat exchanger of air conditioner:		air
Type: compressor driven vapour compression or sorption process		vapour compression
if applicable: driver of compressor: [electric motor or fuel driven, gaseous or liquid fuel, internal or external combustion engine]		electric motor

Item	Symbol	Value	Unit	Item	Symbol	Value	Unit
Rated cooling capacity	$P_{rated,c}$	12.5	kW	Seasonal space cooling energy efficiency	$\eta_{s,c}$	237.0	%
Refrigeration load	$P_{design,c}$	12.5	kW				
Declared cooling capacity for part load at given outdoor temperatures Tj and indoor 27°/19°C (dry/wet bulb)				Declared energy efficiency ratio or gas utilization efficiency / auxiliary energy factor for part load at given outdoor temperatures Tj			
Tj= + 35 °C	Pdc	12.5	kW	Tj = + 35 °C	EER_d or $GUE_{c,bin}$ / $AEF_{c,bin}$	3.2	%
Tj = + 30 °C		9.2	kW	Tj = + 30 °C		4.4	%
Tj = + 25 °C		5.9	kW	Tj = + 25 °C		7.1	%
Tj = + 20 °C		4.5	kW	Tj = + 20 °C		10.1	%
Degradation co- efficient for air conditioners**	C_{dc}	0.25	-				
Power consumption in modes other than 'active mode'							
Off mode	P_{OFF}	0.014	kW	Crankcase heater mode	P_{CK}	0.000	kW
Thermostat-off mode	P_{TO}	0.000	kW	Standby mode	P_{SB}	0.014	kW
Other items							
Capacity control		variable		For air-to-air air conditioner: air flow rate, outdoor		5160	m³/h
Sound power level, outdoor	L_{WA}	73.0	dB				
Sound power level, indoor	L_{WA}	63.0	dB	if engine driven: Emissions of nitrogen oxides	NO_x***	-	mg/kWh fuel input GCV
				GWP of the refrigerant		675	kg CO_2 eq (100 years)
Contact details	Panasonic Testing Centre, Panasonic Marketing Europe GmbH Winsbergring 15, 22525 Hamburg, Germany						

** If C_{dc} is not determined by measurement then the default degradation coefficient air conditioners shall be 0,25.
*** from 26 September 2018.
Where information relates to multi-split air conditioners, the test result and performance data may be obtained on the basis of the performance of the outdoor unit, with a combination of indoor unit(s) recommended by the manufacturer or importer.
**** Refer to Information requirements for UnitList

Information requirements for heat pumps

Model(s):	Outdoor Unit	U-125PZ2E5
	Indoor Unit	S-60PK2E5B×2
Outdoor side heat exchanger of heat pump:		air
Indoor side heat exchanger of heat pump:		air
Indication if the heater is equipped with a supplementary heater:		no
if applicable: driver of compressor: [electric motor or fuel driven, gaseous or liquid fuel, internal or external combustion engine]		electric motor

Parameters shall be declared for the average heating season, parameters for the warmer and colder heating seasons are optional.

Item	Symbol	Value	Unit	Item	Symbol	Value	Unit
Rated heating capacity	$P_{rated,h}$	12.5	kW	Seasonal space heating energy efficiency	$\eta_{s,h}$	139.7	%
Refrigeration load	$P_{design,h}$	12.5	kW				
Declared heating capacity for part load at indoor temperature 20 °C and outdoor temperature Tj				Declared coefficient of performance or gas utilization efficiency / auxiliary energy factor for part load at given outdoor temperatures Tj			
Tj = - 7 °C	P_{dh}	11.0	kW	Tj = - 7 °C	COP_d or $GUE_{h,bin}$ / $AEF_{h,bin}$	2	%
Tj = + 2 °C		6.7	kW	Tj = + 2 °C		3.4	%
Tj = + 7 °C		4.3	kW	Tj = + 7 °C		5.4	%
Tj = + 12 °C		4.2	kW	Tj = + 12 °C		6.5	%
T_{biv} = bivalent temperature		11.0	kW	T_{biv} = bivalent temperature		2.0	%
T_{OL} = operation limit		8.6	kW	T_{OL} = operation limit		1.6	%
For air-to-water heat pumps: Tj = - 15 °C (if T_{OL} < - 20 °C)		-	kW	For water-to-air heat pumps: T_j = - 15 °C (if T_{OL} < -20 °C)		-	%
Bivalent temperature	T_{biv}	-7	°C	For water-to-air heat pumps: Operation limit temperature	T_{OL}	-15	°C
Degradation co- efficient heat pumps**	C_{dh}	0.25	-				
Power consumption in modes other than 'active mode'				Supplementary heater			
Off mode	P_{OFF}	0.014	kW	back-up heating capacity *	elbu	2.4	kW
Thermostat-off mode	P_{TO}	0.000	kW	Type of energy input			
Crankcase heater mode	P_{CK}	0.000	kW	Standby mode	P_{SB}	0.014	kW
Other items							
Capacity control		variable		For air-to-air heat pumps: air flow rate,outdoor		4680	m³/h
Sound power level, outdoor	L_{WA}	73.0	dB	For water-/brine-to-air heat pumps: Rated brine or water flow rate, outdoor side heat exchanger		-	m³/h
Sound power level, indoor	L_{WA}	63.0	dB	Emissions of nitrogen oxides (if applicable)	NO_x***	-	mg/kWh fuel input GCV
				GWP of the refrigerant		675	kg CO_2 eq (100 years)
Contact details	Panasonic Testing Centre, Panasonic Marketing Europe GmbH Winsbergring 15, 22525 Hamburg, Germany						

** If C_{dh} is not determined by measurement then the default degradation coefficient of heat pumps shall be 0,25.
*** from 26 September 2018.
Where information relates to multi-split heat pumps, the test result and performance data may be obtained on the basis of the performance of the outdoor unit, with a combination of indoor unit(s) recommended by the manufacturer or importer.
**** Refer to Information requirements for UnitList

Information requirements for air-to-air air conditioners

Model(s):	Outdoor Unit	U-140PZ2E5
	Indoor Unit	S-71PK2E5B×2
Outdoor side heat exchanger of air conditioner:		air
Indoor side heat exchanger of air conditioner:		air
Type: compressor driven vapour compression or sorption process		vapour compression
if applicable: driver of compressor: [electric motor or fuel driven, gaseous or liquid fuel, internal or external combustion engine]		electric motor

Item	Symbol	Value	Unit	Item	Symbol	Value	Unit
Rated cooling capacity	$P_{rated,c}$	14.0	kW	Seasonal space cooling energy efficiency	$\eta_{s,c}$	228.6	%
Refrigeration load	$P_{design,c}$	14.0	kW				
Declared cooling capacity for part load at given outdoor temperatures Tj and indoor 27°/19°C (dry/wet bulb)				Declared energy efficiency ratio or gas utilization efficiency / auxiliary energy factor for part load at given outdoor temperatures Tj			
Tj= + 35 °C	Pdc	14.0	kW	Tj = + 35 °C	EER_d or $GUE_{c,bin}$ / $AEF_{c,bin}$	2.8	%
Tj = + 30 °C		10.3	kW	Tj = + 30 °C		4.1	%
Tj = + 25 °C		6.6	kW	Tj = + 25 °C		7.0	%
Tj = + 20 °C		4.5	kW	Tj = + 20 °C		10.2	%
Degradation co- efficient for air conditioners**	C_{dc}	0.25	-				
Power consumption in modes other than 'active mode'							
Off mode	P_{OFF}	0.014	kW	Crankcase heater mode	P_{CK}	0.000	kW
Thermostat-off mode	P_{TO}	0.000	kW	Standby mode	P_{SB}	0.014	kW
Other items							
Capacity control		variable		For air-to-air air conditioner: air flow rate, outdoor		5340	m³/h
Sound power level, outdoor	L_{WA}	74.0	dB				
Sound power level, indoor	L_{WA}	63.0	dB	if engine driven: Emissions of nitrogen oxides	NO_x***	-	mg/kWh fuel input GCV
				GWP of the refrigerant		675	kg CO_2 eq (100 years)
Contact details	Panasonic Testing Centre, Panasonic Marketing Europe GmbH Winsbergring 15, 22525 Hamburg, Germany						

** If C_{dc} is not determined by measurement then the default degradation coefficient air conditioners shall be 0,25.
*** from 26 September 2018.
Where information relates to multi-split air conditioners, the test result and performance data may be obtained on the basis of the performance of the outdoor unit, with a combination of indoor unit(s) recommended by the manufacturer or importer.
**** Refer to Information requirements for UnitList

Information requirements for heat pumps

Model(s):	Outdoor Unit	U-140PZ2E5
	Indoor Unit	S-71PK2E5B×2
Outdoor side heat exchanger of heat pump:		air
Indoor side heat exchanger of heat pump:		air
Indication if the heater is equipped with a supplementary heater:		no
if applicable: driver of compressor: [electric motor or fuel driven, gaseous or liquid fuel, internal or external combustion engine]		electric motor

Parameters shall be declared for the average heating season, parameters for the warmer and colder heating seasons are optional.

Item	Symbol	Value	Unit	Item	Symbol	Value	Unit
Rated heating capacity	$P_{rated,h}$	14.0	kW	Seasonal space heating energy efficiency	$\eta_{s,h}$	137.7	%
Refrigeration load	$P_{design,h}$	13.6	kW				
Declared heating capacity for part load at indoor temperature 20 °C and outdoor temperature Tj				Declared coefficient of performance or gas utilization efficiency / auxiliary energy factor for part load at given outdoor temperatures Tj			
Tj = - 7 °C	P_{dh}	12.0	kW	Tj = - 7 °C	COP_d or $GUE_{h,bin}$ / $AEF_{h,bin}$	1.9	%
Tj = + 2 °C		7.5	kW	Tj = + 2 °C		3.3	%
Tj = + 7 °C		4.8	kW	Tj = + 7 °C		5.8	%
Tj = + 12 °C		4.3	kW	Tj = + 12 °C		6.1	%
T_{biv} = bivalent temperature		12.0	kW	T_{biv} = bivalent temperature		1.9	%
T_{OL} = operation limit		8.9	kW	T_{OL} = operation limit		1.4	%
For air-to-water heat pumps: Tj = - 15 °C (if T_{OL} < - 20 °C)		-	kW	For water-to-air heat pumps: T_j = - 15 °C (if T_{OL} < -20 °C)		-	%
Bivalent temperature	T_{biv}	-7	°C	For water-to-air heat pumps: Operation limit temperature	T_{OL}	-15	°C
Degradation co- efficient heat pumps**	C_{dh}	0.25	-				
Power consumption in modes other than 'active mode'				Supplementary heater			
Off mode	P_{OFF}	0.014	kW	back-up heating capacity *	elbu	2.8	kW
Thermostat-off mode	P_{TO}	0.000	kW	Type of energy input			
Crankcase heater mode	P_{CK}	0.000	kW	Standby mode	P_{SB}	0.014	kW
Other items							
Capacity control		variable		For air-to-air heat pumps: air flow rate,outdoor		4980	m³/h
Sound power level, outdoor	L_{WA}	74.0	dB	For water-/brine-to-air heat pumps: Rated brine or water flow rate, outdoor side heat exchanger		-	m³/h
Sound power level, indoor	L_{WA}	63.0	dB	Emissions of nitrogen oxides (if applicable)	NO_x***	-	mg/kWh fuel input GCV
				GWP of the refrigerant		675	kg CO_2 eq (100 years)
Contact details	Panasonic Testing Centre, Panasonic Marketing Europe GmbH Winsbergring 15, 22525 Hamburg, Germany						

** If C_{dh} is not determined by measurement then the default degradation coefficient of heat pumps shall be 0,25.
*** from 26 September 2018.
Where information relates to multi-split heat pumps, the test result and performance data may be obtained on the basis of the performance of the outdoor unit, with a combination of indoor unit(s) recommended by the manufacturer or importer.
**** Refer to Information requirements for UnitList

Information requirements for air-to-air air conditioners

Model(s):	Outdoor Unit	U-125PZ2E8
	Indoor Unit	S-60PK2E5B×2
Outdoor side heat exchanger of air conditioner:		air
Indoor side heat exchanger of air conditioner:		air
Type: compressor driven vapour compression or sorption process		vapour compression
if applicable: driver of compressor: [electric motor or fuel driven, gaseous or liquid fuel, internal or external combustion engine]		electric motor

Item	Symbol	Value	Unit	Item	Symbol	Value	Unit
Rated cooling capacity	$P_{rated,c}$	12.5	kW	Seasonal space cooling energy efficiency	$\eta_{s,c}$	236.3	%
Refrigeration load	$P_{design,c}$	12.5	kW				
Declared cooling capacity for part load at given outdoor temperatures Tj and indoor 27°/19°C (dry/wet bulb)				Declared energy efficiency ratio or gas utilization efficiency / auxiliary energy factor for part load at given outdoor temperatures Tj			
Tj= + 35 °C	Pdc	12.5	kW	Tj = + 35 °C	EER_d or $GUE_{c,bin}$ / $AEF_{c,bin}$	3.2	%
Tj = + 30 °C		9.2	kW	Tj = + 30 °C		4.4	%
Tj = + 25 °C		5.9	kW	Tj = + 25 °C		7.1	%
Tj = + 20 °C		4.5	kW	Tj = + 20 °C		10.1	%
Degradation co- efficient for air conditioners**	C_{dc}	0.25	-				
Power consumption in modes other than 'active mode'							
Off mode	P_{OFF}	0.017	kW	Crankcase heater mode	P_{CK}	0.000	kW
Thermostat-off mode	P_{TO}	0.000	kW	Standby mode	P_{SB}	0.017	kW
Other items							
Capacity control		variable		For air-to-air air conditioner: air flow rate, outdoor		5160	m³/h
Sound power level, outdoor	L_{WA}	73.0	dB				
Sound power level, indoor	L_{WA}	63.0	dB	if engine driven: Emissions of nitrogen oxides	NO_x***	-	mg/kWh fuel input GCV
				GWP of the refrigerant		675	kg CO_2 eq (100 years)
Contact details	Panasonic Testing Centre, Panasonic Marketing Europe GmbH Winsbergring 15, 22525 Hamburg, Germany						

** If C_{dc} is not determined by measurement then the default degradation coefficient air conditioners shall be 0,25.
*** from 26 September 2018.
Where information relates to multi-split air conditioners, the test result and performance data may be obtained on the basis of the performance of the outdoor unit, with a combination of indoor unit(s) recommended by the manufacturer or importer.
**** Refer to Information requirements for UnitList

Information requirements for heat pumps

Model(s):	Outdoor Unit	U-125PZ2E8
	Indoor Unit	S-60PK2E5B×2
Outdoor side heat exchanger of heat pump:		air
Indoor side heat exchanger of heat pump:		air
Indication if the heater is equipped with a supplementary heater:		no
if applicable: driver of compressor: [electric motor or fuel driven, gaseous or liquid fuel, internal or external combustion engine]		electric motor

Parameters shall be declared for the average heating season, parameters for the warmer and colder heating seasons are optional.

Item	Symbol	Value	Unit	Item	Symbol	Value	Unit
Rated heating capacity	$P_{rated,h}$	12.5	kW	Seasonal space heating energy efficiency	$\eta_{s,h}$	139.7	%
Refrigeration load	$P_{design,h}$	12.5	kW				
Declared heating capacity for part load at indoor temperature 20 °C and outdoor temperature Tj				Declared coefficient of performance or gas utilization efficiency / auxiliary energy factor for part load at given outdoor temperatures Tj			
Tj = - 7 °C	P_{dh}	11.0	kW	Tj = - 7 °C	COP_d or $GUE_{h,bin}$ / $AEF_{h,bin}$	2	%
Tj = + 2 °C		6.7	kW	Tj = + 2 °C		3.4	%
Tj = + 7 °C		4.3	kW	Tj = + 7 °C		5.4	%
Tj = + 12 °C		4.2	kW	Tj = + 12 °C		6.5	%
T_{biv} = bivalent temperature		11.0	kW	T_{biv} = bivalent temperature		2.0	%
T_{OL} = operation limit		8.6	kW	T_{OL} = operation limit		1.6	%
For air-to-water heat pumps: Tj = - 15 °C (if T_{OL} < - 20 °C)		-	kW	For water-to-air heat pumps: T_j = - 15 °C (if T_{OL} < -20 °C)		-	%
Bivalent temperature	T_{biv}	-7	°C	For water-to-air heat pumps: Operation limit temperature	T_{OL}	-15	°C
Degradation co- efficient heat pumps**	C_{dh}	0.25	-				
Power consumption in modes other than 'active mode'				Supplementary heater			
Off mode	P_{OFF}	0.017	kW	back-up heating capacity *	elbu	2.4	kW
Thermostat-off mode	P_{TO}	0.000	kW	Type of energy input			
Crankcase heater mode	P_{CK}	0.000	kW	Standby mode	P_{SB}	0.017	kW
Other items							
Capacity control		variable		For air-to-air heat pumps: air flow rate,outdoor		4680	m³/h
Sound power level, outdoor	L_{WA}	73.0	dB	For water-/brine-to-air heat pumps: Rated brine or water flow rate, outdoor side heat exchanger		-	m³/h
Sound power level, indoor	L_{WA}	63.0	dB	Emissions of nitrogen oxides (if applicable)	NO_x***	-	mg/kWh fuel input GCV
				GWP of the refrigerant		675	kg CO_2 eq (100 years)
Contact details	Panasonic Testing Centre, Panasonic Marketing Europe GmbH Winsbergring 15, 22525 Hamburg, Germany						

** If C_{dh} is not determined by measurement then the default degradation coefficient of heat pumps shall be 0,25.
*** from 26 September 2018.
Where information relates to multi-split heat pumps, the test result and performance data may be obtained on the basis of the performance of the outdoor unit, with a combination of indoor unit(s) recommended by the manufacturer or importer.
**** Refer to Information requirements for UnitList

Information requirements for air-to-air air conditioners

Model(s):	Outdoor Unit	U-140PZ2E8
	Indoor Unit	S-71PK2E5B×2
Outdoor side heat exchanger of air conditioner:		air
Indoor side heat exchanger of air conditioner:		air
Type: compressor driven vapour compression or sorption process		vapour compression
if applicable: driver of compressor: [electric motor or fuel driven, gaseous or liquid fuel, internal or external combustion engine]		electric motor

Item	Symbol	Value	Unit	Item	Symbol	Value	Unit
Rated cooling capacity	$P_{rated,c}$	14.0	kW	Seasonal space cooling energy efficiency	$\eta_{s,c}$	228.0	%
Refrigeration load	$P_{design,c}$	14.0	kW				
Declared cooling capacity for part load at given outdoor temperatures Tj and indoor 27°/19°C (dry/wet bulb)				Declared energy efficiency ratio or gas utilization efficiency / auxiliary energy factor for part load at given outdoor temperatures Tj			
Tj= + 35 °C	Pdc	14.0	kW	Tj = + 35 °C	EER_d or $GUE_{c,bin}$ / $AEF_{c,bin}$	2.8	%
Tj = + 30 °C		10.3	kW	Tj = + 30 °C		4.1	%
Tj = + 25 °C		6.6	kW	Tj = + 25 °C		7.0	%
Tj = + 20 °C		4.5	kW	Tj = + 20 °C		10.2	%
Degradation co- efficient for air conditioners**	C_{dc}	0.25	-				
Power consumption in modes other than 'active mode'							
Off mode	P_{OFF}	0.017	kW	Crankcase heater mode	P_{CK}	0.000	kW
Thermostat-off mode	P_{TO}	0.000	kW	Standby mode	P_{SB}	0.017	kW
Other items							
Capacity control		variable		For air-to-air air conditioner: air flow rate, outdoor		5340	m³/h
Sound power level, outdoor	L_{WA}	74.0	dB				
Sound power level, indoor	L_{WA}	63.0	dB	if engine driven: Emissions of nitrogen oxides	NO_x***	-	mg/kWh fuel input GCV
				GWP of the refrigerant		675	kg CO_2 eq (100 years)
Contact details	Panasonic Testing Centre, Panasonic Marketing Europe GmbH Winsbergring 15, 22525 Hamburg, Germany						

** If C_{dc} is not determined by measurement then the default degradation coefficient air conditioners shall be 0,25.
*** from 26 September 2018.
Where information relates to multi-split air conditioners, the test result and performance data may be obtained on the basis of the performance of the outdoor unit, with a combination of indoor unit(s) recommended by the manufacturer or importer.
**** Refer to Information requirements for UnitList

Information requirements for heat pumps

Model(s):	Outdoor Unit	U-140PZ2E8
	Indoor Unit	S-71PK2E5B×2
Outdoor side heat exchanger of heat pump:		air
Indoor side heat exchanger of heat pump:		air
Indication if the heater is equipped with a supplementary heater:		no
if applicable: driver of compressor: [electric motor or fuel driven, gaseous or liquid fuel, internal or external combustion engine]		electric motor

Parameters shall be declared for the average heating season, parameters for the warmer and colder heating seasons are optional.

Item	Symbol	Value	Unit	Item	Symbol	Value	Unit
Rated heating capacity	$P_{rated,h}$	14.0	kW	Seasonal space heating energy efficiency	$\eta_{s,h}$	137.7	%
Refrigeration load	$P_{design,h}$	13.6	kW				
Declared heating capacity for part load at indoor temperature 20 °C and outdoor temperature Tj				Declared coefficient of performance or gas utilization efficiency / auxiliary energy factor for part load at given outdoor temperatures Tj			
Tj = - 7 °C	P_{dh}	12.0	kW	Tj = - 7 °C	COP_d or $GUE_{h,bin}$ / $AEF_{h,bin}$	1.9	%
Tj = + 2 °C		7.5	kW	Tj = + 2 °C		3.3	%
Tj = + 7 °C		4.8	kW	Tj = + 7 °C		5.8	%
Tj = + 12 °C		4.3	kW	Tj = + 12 °C		6.1	%
T_{biv} = bivalent temperature		12.0	kW	T_{biv} = bivalent temperature		1.9	%
T_{OL} = operation limit		8.9	kW	T_{OL} = operation limit		1.4	%
For air-to-water heat pumps: Tj = - 15 °C (if T_{OL} < - 20 °C)		-	kW	For water-to-air heat pumps: T_j = - 15 °C (if T_{OL} < -20 °C)		-	%
Bivalent temperature	T_{biv}	-7	°C	For water-to-air heat pumps: Operation limit temperature	T_{OL}	-15	°C
Degradation co- efficient heat pumps**	C_{dh}	0.25	-				
Power consumption in modes other than 'active mode'				Supplementary heater			
Off mode	P_{OFF}	0.017	kW	back-up heating capacity *	elbu	2.8	kW
Thermostat-off mode	P_{TO}	0.000	kW	Type of energy input			
Crankcase heater mode	P_{CK}	0.000	kW	Standby mode	P_{SB}	0.017	kW
Other items							
Capacity control		variable		For air-to-air heat pumps: air flow rate,outdoor		4980	m³/h
Sound power level, outdoor	L_{WA}	74.0	dB	For water-/brine-to-air heat pumps: Rated brine or water flow rate, outdoor side heat exchanger		-	m³/h
Sound power level, indoor	L_{WA}	63.0	dB	Emissions of nitrogen oxides (if applicable)	NO_x***	-	mg/kWh fuel input GCV
				GWP of the refrigerant		675	kg CO_2 eq (100 years)
Contact details	Panasonic Testing Centre, Panasonic Marketing Europe GmbH Winsbergring 15, 22525 Hamburg, Germany						

** If C_{dh} is not determined by measurement then the default degradation coefficient of heat pumps shall be 0,25.
*** from 26 September 2018.
Where information relates to multi-split heat pumps, the test result and performance data may be obtained on the basis of the performance of the outdoor unit, with a combination of indoor unit(s) recommended by the manufacturer or importer.
**** Refer to Information requirements for UnitList

Information requirements for air-to-air air conditioners

Model(s):	Outdoor Unit	U-125PZ2E5
	Indoor Unit	S-60PF1E5B x2
Outdoor side heat exchanger of air conditioner:		air
Indoor side heat exchanger of air conditioner:		air
Type: compressor driven vapour compression or sorption process		vapour compression
if applicable: driver of compressor: [electric motor or fuel driven, gaseous or liquid fuel, internal or external combustion engine]		electric motor

Item	Symbol	Value	Unit	Item	Symbol	Value	Unit
Rated cooling capacity	$P_{rated,c}$	12.5	kW	Seasonal space cooling energy efficiency	$\eta_{s,c}$	233.8	%
Refrigeration load	$P_{design,c}$	12.5	kW				
Declared cooling capacity for part load at given outdoor temperatures Tj and indoor 27º/19ºC (dry/wet bulb)				Declared energy efficiency ratio or gas utilization efficiency / auxiliary energy factor for part load at given outdoor temperatures Tj			
Tj= + 35 °C	Pdc	12.5	kW	Tj = + 35 °C	EER_d or $GUE_{c,bin}$ / $AEF_{c,bin}$	3.5	%
Tj = + 30 °C		9.2	kW	Tj = + 30 °C		4.9	%
Tj = + 25 °C		5.9	kW	Tj = + 25 °C		6.7	%
Tj = + 20 °C		3.8	kW	Tj = + 20 °C		8.3	%
Degradation co- efficient for air conditioners**	C_{dc}	0.25	-				
Power consumption in modes other than 'active mode'							
Off mode	P_{OFF}	0.012	kW	Crankcase heater mode	P_{CK}	0.000	kW
Thermostat-off mode	P_{TO}	0.000	kW	Standby mode	P_{SB}	0.012	kW
Other items							
Capacity control		variable		For air-to-air air conditioner: air flow rate, outdoor		5160	m³/h
Sound power level, outdoor	L_{WA}	73.0	dB				
Sound power level, indoor	L_{WA}	57.0	dB	if engine driven: Emissions of nitrogen oxides	NO_x***	-	mg/kWh fuel input GCV
				GWP of the refrigerant		675	kg CO_2 eq (100 years)
Contact details	Panasonic Testing Centre, Panasonic Marketing Europe GmbH Winsbergring 15, 22525 Hamburg, Germany						

** If C_{dc} is not determined by measurement then the default degradation coefficient air conditioners shall be 0,25.
*** from 26 September 2018.
Where information relates to multi-split air conditioners, the test result and performance data may be obtained on the basis of the performance of the outdoor unit, with a combination of indoor unit(s) recommended by the manufacturer or importer.
**** Refer to Information requirements for UnitList

Information requirements for heat pumps

Model(s):	Outdoor Unit	U-125PZ2E5
	Indoor Unit	S-60PF1E5B x2
Outdoor side heat exchanger of heat pump:		air
Indoor side heat exchanger of heat pump:		air
Indication if the heater is equipped with a supplementary heater:		no
if applicable: driver of compressor: [electric motor or fuel driven, gaseous or liquid fuel, internal or external combustion engine]		electric motor

Parameters shall be declared for the average heating season, parameters for the warmer and colder heating seasons are optional.

Item	Symbol	Value	Unit	Item	Symbol	Value	Unit
Rated heating capacity	$P_{rated,h}$	12.5	kW	Seasonal space heating energy efficiency	$\eta_{s,h}$	142.7	%
Refrigeration load	$P_{design,h}$	12.5	kW				
Declared heating capacity for part load at indoor temperature 20 °C and outdoor temperature Tj				Declared coefficient of performance or gas utilization efficiency / auxiliary energy factor for part load at given outdoor temperatures Tj			
Tj = - 7 °C	P_{dh}	11.0	kW	Tj = - 7 °C	COP_d or $GUE_{h,bin}$ / $AEF_{h,bin}$	2.3	%
Tj = + 2 °C		6.7	kW	Tj = + 2 °C		3.4	%
Tj = + 7 °C		4.3	kW	Tj = + 7 °C		5.3	%
Tj = + 12 °C		3.9	kW	Tj = + 12 °C		6.2	%
T_{biv} = bivalent temperature		11.0	kW	T_{biv} = bivalent temperature		2.3	%
T_{OL} = operation limit		9.1	kW	T_{OL} = operation limit		1.6	%
For air-to-water heat pumps: Tj = - 15 °C (if T_{OL} < - 20 °C)		-	kW	For water-to-air heat pumps: T_j = - 15 °C (if T_{OL} < -20 °C)		-	%
Bivalent temperature	T_{biv}	-7	°C	For water-to-air heat pumps: Operation limit temperature	T_{OL}	-15	℃
Degradation co- efficient heat pumps**	C_{dh}	0.25	-				
Power consumption in modes other than 'active mode'				Supplementary heater			
Off mode	P_{OFF}	0.012	kW	back-up heating capacity *	elbu	2.3	kW
Thermostat-off mode	P_{TO}	0.000	kW	Type of energy input			
Crankcase heater mode	P_{CK}	0.000	kW	Standby mode	P_{SB}	0.012	kW
Other items							
Capacity control		variable		For air-to-air heat pumps: air flow rate,outdoor		4680	m³/h
Sound power level, outdoor	L_{WA}	73.0	dB	For water-/brine-to-air heat pumps: Rated brine or water flow rate, outdoor side heat exchanger		-	m³/h
Sound power level, indoor	L_{WA}	57.0	dB	Emissions of nitrogen oxides (if applicable)	NO_x***	-	mg/kWh fuel input GCV
				GWP of the refrigerant		675	kg CO_2 eq (100 years)
Contact details	Panasonic Testing Centre, Panasonic Marketing Europe GmbH Winsbergring 15, 22525 Hamburg, Germany						

** If C_{dh} is not determined by measurement then the default degradation coefficient of heat pumps shall be 0,25.
*** from 26 September 2018.
Where information relates to multi-split heat pumps, the test result and performance data may be obtained on the basis of the performance of the outdoor unit, with a combination of indoor unit(s) recommended by the manufacturer or importer.
**** Refer to Information requirements for UnitList

Information requirements for air-to-air air conditioners

Model(s):	Outdoor Unit	U-140PZ2E5
	Indoor Unit	S-71PF1E5B x2
Outdoor side heat exchanger of air conditioner:		air
Indoor side heat exchanger of air conditioner:		air
Type: compressor driven vapour compression or sorption process		vapour compression
if applicable: driver of compressor: [electric motor or fuel driven, gaseous or liquid fuel, internal or external combustion engine]		electric motor

Item	Symbol	Value	Unit	Item	Symbol	Value	Unit
Rated cooling capacity	$P_{rated,c}$	14.0	kW	Seasonal space cooling energy efficiency	$\eta_{s,c}$	222.3	%
Refrigeration load	$P_{design,c}$	14.0	kW				
Declared cooling capacity for part load at given outdoor temperatures Tj and indoor 27°/19°C (dry/wet bulb)				Declared energy efficiency ratio or gas utilization efficiency / auxiliary energy factor for part load at given outdoor temperatures Tj			
Tj= + 35 °C	Pdc	14.0	kW	Tj = + 35 °C	EER_d or $GUE_{c,bin}$ / $AEF_{c,bin}$	3.1	%
Tj = + 30 °C		10.3	kW	Tj = + 30 °C		4.7	%
Tj = + 25 °C		6.6	kW	Tj = + 25 °C		6.5	%
Tj = + 20 °C		3.8	kW	Tj = + 20 °C		7.6	%
Degradation co- efficient for air conditioners**	C_{dc}	0.25	-				
Power consumption in modes other than 'active mode'							
Off mode	P_{OFF}	0.012	kW	Crankcase heater mode	P_{CK}	0.000	kW
Thermostat-off mode	P_{TO}	0.000	kW	Standby mode	P_{SB}	0.012	kW
Other items							
Capacity control		variable		For air-to-air air conditioner: air flow rate, outdoor		5340	m³/h
Sound power level, outdoor	L_{WA}	74.0	dB				
Sound power level, indoor	L_{WA}	57.0	dB	if engine driven: Emissions of nitrogen oxides	NO_x***	-	mg/kWh fuel input GCV
				GWP of the refrigerant		675	kg CO_2 eq (100 years)
Contact details	Panasonic Testing Centre, Panasonic Marketing Europe GmbH Winsbergring 15, 22525 Hamburg, Germany						

** If C_{dc} is not determined by measurement then the default degradation coefficient air conditioners shall be 0,25.
*** from 26 September 2018.
Where information relates to multi-split air conditioners, the test result and performance data may be obtained on the basis of the performance of the outdoor unit, with a combination of indoor unit(s) recommended by the manufacturer or importer.
**** Refer to Information requirements for UnitList

Information requirements for heat pumps

Model(s):	Outdoor Unit	U-140PZ2E5
	Indoor Unit	S-71PF1E5B x2
Outdoor side heat exchanger of heat pump:		air
Indoor side heat exchanger of heat pump:		air
Indication if the heater is equipped with a supplementary heater:		no
if applicable: driver of compressor: [electric motor or fuel driven, gaseous or liquid fuel, internal or external combustion engine]		electric motor

Parameters shall be declared for the average heating season, parameters for the warmer and colder heating seasons are optional.

Item	Symbol	Value	Unit	Item	Symbol	Value	Unit
Rated heating capacity	$P_{rated,h}$	14.0	kW	Seasonal space heating energy efficiency	$\eta_{s,h}$	139.4	%
Refrigeration load	$P_{design,h}$	13.6	kW				
Declared heating capacity for part load at indoor temperature 20 °C and outdoor temperature Tj				Declared coefficient of performance or gas utilization efficiency / auxiliary energy factor for part load at given outdoor temperatures Tj			
Tj = - 7 °C	P_{dh}	12.0	kW	Tj = - 7 °C	COP_d or $GUE_{h,bin}$ / $AEF_{h,bin}$	2.1	%
Tj = + 2 °C		7.3	kW	Tj = + 2 °C		3.4	%
Tj = + 7 °C		4.7	kW	Tj = + 7 °C		5.2	%
Tj = + 12 °C		3.9	kW	Tj = + 12 °C		6.1	%
T_{biv} = bivalent temperature		12.0	kW	T_{biv} = bivalent temperature		2.1	%
T_{OL} = operation limit		9.1	kW	T_{OL} = operation limit		1.6	%
For air-to-water heat pumps: Tj = - 15 °C (if T_{OL} < - 20 °C)		-	kW	For water-to-air heat pumps: T_j = - 15 °C (if T_{OL} < -20 °C)		-	%
Bivalent temperature	T_{biv}	-7	°C	For water-to-air heat pumps: Operation limit temperature	T_{OL}	-15	°C
Degradation co- efficient heat pumps**	C_{dh}	0.25	-				
Power consumption in modes other than 'active mode'				Supplementary heater			
Off mode	P_{OFF}	0.012	kW	back-up heating capacity *	elbu	2.7	kW
Thermostat-off mode	P_{TO}	0.000	kW	Type of energy input			
Crankcase heater mode	P_{CK}	0.000	kW	Standby mode	P_{SB}	0.012	kW
Other items							
Capacity control		variable		For air-to-air heat pumps: air flow rate,outdoor		4980	m³/h
Sound power level, outdoor	L_{WA}	74.0	dB	For water-/brine-to-air heat pumps: Rated brine or water flow rate, outdoor side heat exchanger		-	m³/h
Sound power level, indoor	L_{WA}	57.0	dB	Emissions of nitrogen oxides (if applicable)	NO_x***	-	mg/kWh fuel input GCV
				GWP of the refrigerant		675	kg CO_2 eq (100 years)
Contact details	Panasonic Testing Centre, Panasonic Marketing Europe GmbH Winsbergring 15, 22525 Hamburg, Germany						

** If C_{dh} is not determined by measurement then the default degradation coefficient of heat pumps shall be 0,25.
*** from 26 September 2018.
Where information relates to multi-split heat pumps, the test result and performance data may be obtained on the basis of the performance of the outdoor unit, with a combination of indoor unit(s) recommended by the manufacturer or importer.
**** Refer to Information requirements for UnitList

Information requirements for air-to-air air conditioners

Model(s):	Outdoor Unit	U-125PZ2E5
	Indoor Unit	S-125PF1E5B
Outdoor side heat exchanger of air conditioner:		air
Indoor side heat exchanger of air conditioner:		air
Type: compressor driven vapour compression or sorption process		vapour compression
if applicable: driver of compressor: [electric motor or fuel driven, gaseous or liquid fuel, internal or external combustion engine]		electric motor

Item	Symbol	Value	Unit	Item	Symbol	Value	Unit
Rated cooling capacity	$P_{rated,c}$	12.5	kW	Seasonal space cooling energy efficiency	$\eta_{s,c}$	219.2	%
Refrigeration load	$P_{design,c}$	12.5	kW				
Declared cooling capacity for part load at given outdoor temperatures Tj and indoor 27º/19ºC (dry/wet bulb)				Declared energy efficiency ratio or gas utilization efficiency / auxiliary energy factor for part load at given outdoor temperatures Tj			
Tj= + 35 ºC	Pdc	12.5	kW	Tj = + 35 ºC	EER_d or $GUE_{c,bin}$ / $AEF_{c,bin}$	3.5	%
Tj = + 30 ºC		9.2	kW	Tj = + 30 ºC		4.9	%
Tj = + 25 ºC		5.9	kW	Tj = + 25 ºC		7.2	%
Tj = + 20 ºC		3.8	kW	Tj = + 20 ºC		9.5	%
Degradation co- efficient for air conditioners**	C_{dc}	0.25	-				
Power consumption in modes other than 'active mode'							
Off mode	P_{OFF}	0.020	kW	Crankcase heater mode	P_{CK}	0.000	kW
Thermostat-off mode	P_{TO}	0.215	kW	Standby mode	P_{SB}	0.020	kW
Other items							
Capacity control		variable		For air-to-air air conditioner: air flow rate, outdoor		5160	m³/h
Sound power level, outdoor	L_{WA}	73.0	dB				
Sound power level, indoor	L_{WA}	61.0	dB	if engine driven: Emissions of nitrogen oxides	NO_x***	-	mg/kWh fuel input GCV
				GWP of the refrigerant		675	kg CO_2 eq (100 years)
Contact details	Panasonic Testing Centre, Panasonic Marketing Europe GmbH Winsbergring 15, 22525 Hamburg, Germany						

** If C_{dc} is not determined by measurement then the default degradation coefficient air conditioners shall be 0,25.
*** from 26 September 2018.
Where information relates to multi-split air conditioners, the test result and performance data may be obtained on the basis of the performance of the outdoor unit, with a combination of indoor unit(s) recommended by the manufacturer or importer.
**** Refer to Information requirements for UnitList

Information requirements for heat pumps

Model(s):	Outdoor Unit	U-125PZ2E5
	Indoor Unit	S-125PF1E5B
Outdoor side heat exchanger of heat pump:		air
Indoor side heat exchanger of heat pump:		air
Indication if the heater is equipped with a supplementary heater:		no
if applicable: driver of compressor: [electric motor or fuel driven, gaseous or liquid fuel, internal or external combustion engine]		electric motor

Parameters shall be declared for the average heating season, parameters for the warmer and colder heating seasons are optional.

Item	Symbol	Value	Unit	Item	Symbol	Value	Unit
Rated heating capacity	$P_{rated,h}$	12.5	kW	Seasonal space heating energy efficiency	$\eta_{s,h}$	141.5	%
Refrigeration load	$P_{design,h}$	12.5	kW				
Declared heating capacity for part load at indoor temperature 20 °C and outdoor temperature Tj				Declared coefficient of performance or gas utilization efficiency / auxiliary energy factor for part load at given outdoor temperatures Tj			
Tj = - 7 ºC	P_{dh}	11.0	kW	Tj = - 7 ºC	COP_d or $GUE_{h,bin}$ / $AEF_{h,bin}$	2.3	%
Tj = + 2 ºC		6.7	kW	Tj = + 2 ºC		3.4	%
Tj = + 7 ºC		4.3	kW	Tj = + 7 ºC		5.3	%
Tj = + 12 ºC		3.9	kW	Tj = + 12 ºC		6.2	%
T_{biv} = bivalent temperature		11.0	kW	T_{biv} = bivalent temperature		2.3	%
T_{OL} = operation limit		9.1	kW	T_{OL} = operation limit		1.6	%
For air-to-water heat pumps: Tj = - 15 ºC (if T_{OL} < - 20 ºC)		-	kW	For water-to-air heat pumps: T_j = - 15 ºC (if T_{OL} < -20 ºC)		-	%
Bivalent temperature	T_{biv}	-7	ºC	For water-to-air heat pumps: Operation limit temperature	T_{OL}	-15	℃
Degradation co- efficient heat pumps**	C_{dh}	0.25	-				
Power consumption in modes other than 'active mode'				Supplementary heater			
Off mode	P_{OFF}	0.020	kW	back-up heating capacity *	elbu	2.3	kW
Thermostat-off mode	P_{TO}	0.215	kW	Type of energy input			
Crankcase heater mode	P_{CK}	0.000	kW	Standby mode	P_{SB}	0.020	kW
Other items							
Capacity control		variable		For air-to-air heat pumps: air flow rate,outdoor		4680	m³/h
Sound power level, outdoor	L_{WA}	73.0	dB	For water-/brine-to-air heat pumps: Rated brine or water flow rate, outdoor side heat exchanger		-	m³/h
Sound power level, indoor	L_{WA}	61.0	dB	Emissions of nitrogen oxides (if applicable)	NO_x***	-	mg/kWh fuel input GCV
				GWP of the refrigerant		675	kg CO_2 eq (100 years)
Contact details	Panasonic Testing Centre, Panasonic Marketing Europe GmbH Winsbergring 15, 22525 Hamburg, Germany						

** If C_{dh} is not determined by measurement then the default degradation coefficient of heat pumps shall be 0,25.
*** from 26 September 2018.
Where information relates to multi-split heat pumps, the test result and performance data may be obtained on the basis of the performance of the outdoor unit, with a combination of indoor unit(s) recommended by the manufacturer or importer.
**** Refer to Information requirements for UnitList

Information requirements for air-to-air air conditioners

Model(s):	Outdoor Unit	U-140PZ2E5
	Indoor Unit	S-140PF1E5B
Outdoor side heat exchanger of air conditioner:		air
Indoor side heat exchanger of air conditioner:		air
Type: compressor driven vapour compression or sorption process		vapour compression
if applicable: driver of compressor: [electric motor or fuel driven, gaseous or liquid fuel, internal or external combustion engine]		electric motor

Item	Symbol	Value	Unit	Item	Symbol	Value	Unit
Rated cooling capacity	$P_{rated,c}$	14.0	kW	Seasonal space cooling energy efficiency	$\eta_{s,c}$	212.3	%
Refrigeration load	$P_{design,c}$	14.0	kW				
Declared cooling capacity for part load at given outdoor temperatures Tj and indoor 27º/19ºC (dry/wet bulb)				Declared energy efficiency ratio or gas utilization efficiency / auxiliary energy factor for part load at given outdoor temperatures Tj			
Tj= + 35 ºC	Pdc	14.0	kW	Tj = + 35 ºC	EER_d or $GUE_{c,bin}$ / $AEF_{c,bin}$	3.1	%
Tj = + 30 ºC		10.3	kW	Tj = + 30 ºC		4.7	%
Tj = + 25 ºC		6.6	kW	Tj = + 25 ºC		7.0	%
Tj = + 20 ºC		3.8	kW	Tj = + 20 ºC		8.9	%
Degradation co- efficient for air conditioners**	C_{dc}	0.25	-				
Power consumption in modes other than 'active mode'							
Off mode	P_{OFF}	0.020	kW	Crankcase heater mode	P_{CK}	0.000	kW
Thermostat-off mode	P_{TO}	0.223	kW	Standby mode	P_{SB}	0.020	kW
Other items							
Capacity control		variable		For air-to-air air conditioner: air flow rate, outdoor		5340	m³/h
Sound power level, outdoor	L_{WA}	74.0	dB				
Sound power level, indoor	L_{WA}	62.0	dB	if engine driven: Emissions of nitrogen oxides	NO_x***	-	mg/kWh fuel input GCV
				GWP of the refrigerant		675	kg CO_2 eq (100 years)
Contact details	Panasonic Testing Centre, Panasonic Marketing Europe GmbH Winsbergring 15, 22525 Hamburg, Germany						

** If C_{dc} is not determined by measurement then the default degradation coefficient air conditioners shall be 0,25.
*** from 26 September 2018.
Where information relates to multi-split air conditioners, the test result and performance data may be obtained on the basis of the performance of the outdoor unit, with a combination of indoor unit(s) recommended by the manufacturer or importer.
**** Refer to Information requirements for UnitList

Information requirements for heat pumps

Model(s):	Outdoor Unit	U-140PZ2E5
	Indoor Unit	S-140PF1E5B
Outdoor side heat exchanger of heat pump:		air
Indoor side heat exchanger of heat pump:		air
Indication if the heater is equipped with a supplementary heater:		no
if applicable: driver of compressor: [electric motor or fuel driven, gaseous or liquid fuel, internal or external combustion engine]		electric motor

Parameters shall be declared for the average heating season, parameters for the warmer and colder heating seasons are optional.

Item	Symbol	Value	Unit	Item	Symbol	Value	Unit
Rated heating capacity	$P_{rated,h}$	14.0	kW	Seasonal space heating energy efficiency	$\eta_{s,h}$	138.4	%
Refrigeration load	$P_{design,h}$	13.6	kW				
Declared heating capacity for part load at indoor temperature 20 °C and outdoor temperature Tj				Declared coefficient of performance or gas utilization efficiency / auxiliary energy factor for part load at given outdoor temperatures Tj			
Tj = - 7 ºC	P_{dh}	12.0	kW	Tj = - 7 ºC	COP_d or $GUE_{h,bin}$ / $AEF_{h,bin}$	2.1	%
Tj = + 2 ºC		7.3	kW	Tj = + 2 ºC		3.4	%
Tj = + 7 ºC		4.7	kW	Tj = + 7 ºC		5.2	%
Tj = + 12 ºC		3.9	kW	Tj = + 12 ºC		6.1	%
T_{biv} = bivalent temperature		12.0	kW	T_{biv} = bivalent temperature		2.1	%
T_{OL} = operation limit		9.1	kW	T_{OL} = operation limit		1.6	%
For air-to-water heat pumps: Tj = - 15 ºC (if T_{OL} < - 20 ºC)		-	kW	For water-to-air heat pumps: T_j = - 15 ºC (if T_{OL} < -20 ºC)		-	%
Bivalent temperature	T_{biv}	-7	ºC	For water-to-air heat pumps: Operation limit temperature	T_{OL}	-15	ºC
Degradation co- efficient heat pumps**	C_{dh}	0.25	-				
Power consumption in modes other than 'active mode'				Supplementary heater			
Off mode	P_{OFF}	0.020	kW	back-up heating capacity *	elbu	2.7	kW
Thermostat-off mode	P_{TO}	0.223	kW	Type of energy input			
Crankcase heater mode	P_{CK}	0.000	kW	Standby mode	P_{SB}	0.020	kW
Other items							
Capacity control		variable		For air-to-air heat pumps: air flow rate,outdoor		4980	m³/h
Sound power level, outdoor	L_{WA}	74.0	dB	For water-/brine-to-air heat pumps: Rated brine or water flow rate, outdoor side heat exchanger		-	m³/h
Sound power level, indoor	L_{WA}	62.0	dB	Emissions of nitrogen oxides (if applicable)	NO_x***	-	mg/kWh fuel input GCV
				GWP of the refrigerant		675	kg CO_2 eq (100 years)
Contact details	Panasonic Testing Centre, Panasonic Marketing Europe GmbH Winsbergring 15, 22525 Hamburg, Germany						

** If C_{dh} is not determined by measurement then the default degradation coefficient of heat pumps shall be 0,25.
*** from 26 September 2018.
Where information relates to multi-split heat pumps, the test result and performance data may be obtained on the basis of the performance of the outdoor unit, with a combination of indoor unit(s) recommended by the manufacturer or importer.
**** Refer to Information requirements for UnitList

Information requirements for air-to-air air conditioners

Model(s):	Outdoor Unit	U-125PZ2E8
	Indoor Unit	S-60PF1E5B x2
Outdoor side heat exchanger of air conditioner:		air
Indoor side heat exchanger of air conditioner:		air
Type: compressor driven vapour compression or sorption process		vapour compression
if applicable: driver of compressor: [electric motor or fuel driven, gaseous or liquid fuel, internal or external combustion engine]		electric motor

Item	Symbol	Value	Unit	Item	Symbol	Value	Unit
Rated cooling capacity	$P_{rated,c}$	12.5	kW	Seasonal space cooling energy efficiency	$\eta_{s,c}$	233.0	%
Refrigeration load	$P_{design,c}$	12.5	kW				
Declared cooling capacity for part load at given outdoor temperatures Tj and indoor 27°/19°C (dry/wet bulb)				Declared energy efficiency ratio or gas utilization efficiency / auxiliary energy factor for part load at given outdoor temperatures Tj			
Tj= + 35 °C	Pdc	12.5	kW	Tj = + 35 °C	EER_d or $GUE_{c,bin}$ / $AEF_{c,bin}$	3.5	%
Tj = + 30 °C		9.2	kW	Tj = + 30 °C		4.9	%
Tj = + 25 °C		5.9	kW	Tj = + 25 °C		6.7	%
Tj = + 20 °C		3.8	kW	Tj = + 20 °C		8.3	%
Degradation co- efficient for air conditioners**	C_{dc}	0.25	-				
Power consumption in modes other than 'active mode'							
Off mode	P_{OFF}	0.015	kW	Crankcase heater mode	P_{CK}	0.000	kW
Thermostat-off mode	P_{TO}	0.000	kW	Standby mode	P_{SB}	0.015	kW
Other items							
Capacity control		variable		For air-to-air air conditioner: air flow rate, outdoor		5160	m³/h
Sound power level, outdoor	L_{WA}	73.0	dB				
Sound power level, indoor	L_{WA}	57.0	dB	if engine driven: Emissions of nitrogen oxides	NO_x***	-	mg/kWh fuel input GCV
				GWP of the refrigerant		675	kg CO_2 eq (100 years)
Contact details	Panasonic Testing Centre, Panasonic Marketing Europe GmbH Winsbergring 15, 22525 Hamburg, Germany						

** If C_{dc} is not determined by measurement then the default degradation coefficient air conditioners shall be 0,25.
*** from 26 September 2018.
Where information relates to multi-split air conditioners, the test result and performance data may be obtained on the basis of the performance of the outdoor unit, with a combination of indoor unit(s) recommended by the manufacturer or importer.
**** Refer to Information requirements for UnitList

Information requirements for heat pumps

Model(s):	Outdoor Unit	U-125PZ2E8
	Indoor Unit	S-60PF1E5B x2
Outdoor side heat exchanger of heat pump:		air
Indoor side heat exchanger of heat pump:		air
Indication if the heater is equipped with a supplementary heater:		no
if applicable: driver of compressor: [electric motor or fuel driven, gaseous or liquid fuel, internal or external combustion engine]		electric motor

Parameters shall be declared for the average heating season, parameters for the warmer and colder heating seasons are optional.

Item	Symbol	Value	Unit	Item	Symbol	Value	Unit
Rated heating capacity	$P_{rated,h}$	12.5	kW	Seasonal space heating energy efficiency	$\eta_{s,h}$	142.7	%
Refrigeration load	$P_{design,h}$	12.5	kW				
Declared heating capacity for part load at indoor temperature 20 °C and outdoor temperature Tj				Declared coefficient of performance or gas utilization efficiency / auxiliary energy factor for part load at given outdoor temperatures Tj			
Tj = - 7 °C	P_{dh}	11.0	kW	Tj = - 7 °C	COP_d or $GUE_{h,bin}$ / $AEF_{h,bin}$	2.3	%
Tj = + 2 °C		6.7	kW	Tj = + 2 °C		3.4	%
Tj = + 7 °C		4.3	kW	Tj = + 7 °C		5.3	%
Tj = + 12 °C		3.9	kW	Tj = + 12 °C		6.2	%
T_{biv} = bivalent temperature		11.0	kW	T_{biv} = bivalent temperature		2.3	%
T_{OL} = operation limit		9.1	kW	T_{OL} = operation limit		1.6	%
For air-to-water heat pumps: Tj = - 15 °C (if T_{OL} < - 20 °C)		-	kW	For water-to-air heat pumps: T_j = - 15 °C (if T_{OL} < -20 °C)		-	%
Bivalent temperature	T_{biv}	-7	°C	For water-to-air heat pumps: Operation limit temperature	T_{OL}	-15	℃
Degradation co- efficient heat pumps**	C_{dh}	0.25	-				
Power consumption in modes other than 'active mode'				Supplementary heater			
Off mode	P_{OFF}	0.015	kW	back-up heating capacity *	elbu	2.3	kW
Thermostat-off mode	P_{TO}	0.000	kW	Type of energy input			
Crankcase heater mode	P_{CK}	0.000	kW	Standby mode	P_{SB}	0.015	kW
Other items							
Capacity control		variable		For air-to-air heat pumps: air flow rate,outdoor		4680	m³/h
Sound power level, outdoor	L_{WA}	73.0	dB	For water-/brine-to-air heat pumps: Rated brine or water flow rate, outdoor side heat exchanger		-	m³/h
Sound power level, indoor	L_{WA}	57.0	dB	Emissions of nitrogen oxides (if applicable)	NO_x***	-	mg/kWh fuel input GCV
				GWP of the refrigerant		675	kg CO_2 eq (100 years)
Contact details	Panasonic Testing Centre, Panasonic Marketing Europe GmbH Winsbergring 15, 22525 Hamburg, Germany						

** If C_{dh} is not determined by measurement then the default degradation coefficient of heat pumps shall be 0,25.
*** from 26 September 2018.
Where information relates to multi-split heat pumps, the test result and performance data may be obtained on the basis of the performance of the outdoor unit, with a combination of indoor unit(s) recommended by the manufacturer or importer.
**** Refer to Information requirements for UnitList

Information requirements for air-to-air air conditioners

Model(s):	Outdoor Unit	U-140PZ2E8
	Indoor Unit	S-71PF1E5B x2
Outdoor side heat exchanger of air conditioner:		air
Indoor side heat exchanger of air conditioner:		air
Type: compressor driven vapour compression or sorption process		vapour compression
if applicable: driver of compressor: [electric motor or fuel driven, gaseous or liquid fuel, internal or external combustion engine]		electric motor

Item	Symbol	Value	Unit	Item	Symbol	Value	Unit
Rated cooling capacity	$P_{rated,c}$	14.0	kW	Seasonal space cooling energy efficiency	$\eta_{s,c}$	221.7	%
Refrigeration load	$P_{design,c}$	14.0	kW				
Declared cooling capacity for part load at given outdoor temperatures Tj and indoor 27°/19°C (dry/wet bulb)				Declared energy efficiency ratio or gas utilization efficiency / auxiliary energy factor for part load at given outdoor temperatures Tj			
Tj= + 35 °C	Pdc	14.0	kW	Tj = + 35 °C	EER_d or $GUE_{c,bin}$ / $AEF_{c,bin}$	3.1	%
Tj = + 30 °C		10.3	kW	Tj = + 30 °C		4.7	%
Tj = + 25 °C		6.6	kW	Tj = + 25 °C		6.5	%
Tj = + 20 °C		3.8	kW	Tj = + 20 °C		7.6	%
Degradation co- efficient for air conditioners**	C_{dc}	0.25	-				
Power consumption in modes other than 'active mode'							
Off mode	P_{OFF}	0.015	kW	Crankcase heater mode	P_{CK}	0.000	kW
Thermostat-off mode	P_{TO}	0.000	kW	Standby mode	P_{SB}	0.015	kW
Other items							
Capacity control		variable		For air-to-air air conditioner: air flow rate, outdoor		5340	m³/h
Sound power level, outdoor	L_{WA}	74.0	dB				
Sound power level, indoor	L_{WA}	57.0	dB	if engine driven: Emissions of nitrogen oxides	NO_x***	-	mg/kWh fuel input GCV
				GWP of the refrigerant		675	kg CO_2 eq (100 years)
Contact details	Panasonic Testing Centre, Panasonic Marketing Europe GmbH Winsbergring 15, 22525 Hamburg, Germany						

** If C_{dc} is not determined by measurement then the default degradation coefficient air conditioners shall be 0,25.
*** from 26 September 2018.
Where information relates to multi-split air conditioners, the test result and performance data may be obtained on the basis of the performance of the outdoor unit, with a combination of indoor unit(s) recommended by the manufacturer or importer.
**** Refer to Information requirements for UnitList

Information requirements for heat pumps

Model(s):	Outdoor Unit	U-140PZ2E8
	Indoor Unit	S-71PF1E5B x2
Outdoor side heat exchanger of heat pump:		air
Indoor side heat exchanger of heat pump:		air
Indication if the heater is equipped with a supplementary heater:		no
if applicable: driver of compressor: [electric motor or fuel driven, gaseous or liquid fuel, internal or external combustion engine]		electric motor

Parameters shall be declared for the average heating season, parameters for the warmer and colder heating seasons are optional.

Item	Symbol	Value	Unit	Item	Symbol	Value	Unit
Rated heating capacity	$P_{rated,h}$	14.0	kW	Seasonal space heating energy efficiency	$\eta_{s,h}$	139.4	%
Refrigeration load	$P_{design,h}$	13.6	kW				
Declared heating capacity for part load at indoor temperature 20 °C and outdoor temperature Tj				Declared coefficient of performance or gas utilization efficiency / auxiliary energy factor for part load at given outdoor temperatures Tj			
Tj = - 7 °C	P_{dh}	12.0	kW	Tj = - 7 °C	COP_d or $GUE_{h,bin}$ / $AEF_{h,bin}$	2.1	%
Tj = + 2 °C		7.3	kW	Tj = + 2 °C		3.4	%
Tj = + 7 °C		4.7	kW	Tj = + 7 °C		5.2	%
Tj = + 12 °C		3.9	kW	Tj = + 12 °C		6.1	%
T_{biv} = bivalent temperature		12.0	kW	T_{biv} = bivalent temperature		2.1	%
T_{OL} = operation limit		9.1	kW	T_{OL} = operation limit		1.6	%
For air-to-water heat pumps: Tj = - 15 °C (if T_{OL} < - 20 °C)		-	kW	For water-to-air heat pumps: T_j = - 15 °C (if T_{OL} < -20 °C)		-	%
Bivalent temperature	T_{biv}	-7	°C	For water-to-air heat pumps: Operation limit temperature	T_{OL}	-15	°C
Degradation co- efficient heat pumps**	C_{dh}	0.25	-				
Power consumption in modes other than 'active mode'				Supplementary heater			
Off mode	P_{OFF}	0.015	kW	back-up heating capacity *	elbu	2.7	kW
Thermostat-off mode	P_{TO}	0.000	kW	Type of energy input			
Crankcase heater mode	P_{CK}	0.000	kW	Standby mode	P_{SB}	0.015	kW
Other items							
Capacity control		variable		For air-to-air heat pumps: air flow rate,outdoor		4980	m³/h
Sound power level, outdoor	L_{WA}	74.0	dB	For water-/brine-to-air heat pumps: Rated brine or water flow rate, outdoor side heat exchanger		-	m³/h
Sound power level, indoor	L_{WA}	57.0	dB	Emissions of nitrogen oxides (if applicable)	NO_x***	-	mg/kWh fuel input GCV
				GWP of the refrigerant		675	kg CO_2 eq (100 years)
Contact details	Panasonic Testing Centre, Panasonic Marketing Europe GmbH Winsbergring 15, 22525 Hamburg, Germany						

** If C_{dh} is not determined by measurement then the default degradation coefficient of heat pumps shall be 0,25.
*** from 26 September 2018.
Where information relates to multi-split heat pumps, the test result and performance data may be obtained on the basis of the performance of the outdoor unit, with a combination of indoor unit(s) recommended by the manufacturer or importer.
**** Refer to Information requirements for UnitList

Information requirements for air-to-air air conditioners

Model(s):	Outdoor Unit	U-125PZ2E8
	Indoor Unit	S-125PF1E5B
Outdoor side heat exchanger of air conditioner:		air
Indoor side heat exchanger of air conditioner:		air
Type: compressor driven vapour compression or sorption process		vapour compression
if applicable: driver of compressor: [electric motor or fuel driven, gaseous or liquid fuel, internal or external combustion engine]		electric motor

Item	Symbol	Value	Unit	Item	Symbol	Value	Unit
Rated cooling capacity	$P_{rated,c}$	12.5	kW	Seasonal space cooling energy efficiency	$\eta_{s,c}$	218.5	%
Refrigeration load	$P_{design,c}$	12.5	kW				
Declared cooling capacity for part load at given outdoor temperatures Tj and indoor 27°/19°C (dry/wet bulb)				Declared energy efficiency ratio or gas utilization efficiency / auxiliary energy factor for part load at given outdoor temperatures Tj			
Tj= + 35 °C	Pdc	12.5	kW	Tj = + 35 °C	EER_d or $GUE_{c,bin}$ / $AEF_{c,bin}$	3.5	%
Tj = + 30 °C		9.2	kW	Tj = + 30 °C		4.9	%
Tj = + 25 °C		5.9	kW	Tj = + 25 °C		7.2	%
Tj = + 20 °C		3.8	kW	Tj = + 20 °C		9.5	%
Degradation co- efficient for air conditioners**	C_{dc}	0.25	-				
Power consumption in modes other than 'active mode'							
Off mode	P_{OFF}	0.023	kW	Crankcase heater mode	P_{CK}	0.000	kW
Thermostat-off mode	P_{TO}	0.215	kW	Standby mode	P_{SB}	0.023	kW
Other items							
Capacity control		variable		For air-to-air air conditioner: air flow rate, outdoor		5160	m³/h
Sound power level, outdoor	L_{WA}	73.0	dB				
Sound power level, indoor	L_{WA}	61.0	dB	if engine driven: Emissions of nitrogen oxides	NO_x***	-	mg/kWh fuel input GCV
				GWP of the refrigerant		675	kg CO_2 eq (100 years)
Contact details	Panasonic Testing Centre, Panasonic Marketing Europe GmbH Winsbergring 15, 22525 Hamburg, Germany						

** If C_{dc} is not determined by measurement then the default degradation coefficient air conditioners shall be 0,25.
*** from 26 September 2018.
Where information relates to multi-split air conditioners, the test result and performance data may be obtained on the basis of the performance of the outdoor unit, with a combination of indoor unit(s) recommended by the manufacturer or importer.
**** Refer to Information requirements for UnitList

Information requirements for heat pumps

Model(s):	Outdoor Unit	U-125PZ2E8
	Indoor Unit	S-125PF1E5B
Outdoor side heat exchanger of heat pump:		air
Indoor side heat exchanger of heat pump:		air
Indication if the heater is equipped with a supplementary heater:		no
if applicable: driver of compressor: [electric motor or fuel driven, gaseous or liquid fuel, internal or external combustion engine]		electric motor

Parameters shall be declared for the average heating season, parameters for the warmer and colder heating seasons are optional.

Item	Symbol	Value	Unit	Item	Symbol	Value	Unit
Rated heating capacity	$P_{rated,h}$	12.5	kW	Seasonal space heating energy efficiency	$\eta_{s,h}$	141.5	%
Refrigeration load	$P_{design,h}$	12.5	kW				
Declared heating capacity for part load at indoor temperature 20 °C and outdoor temperature Tj				Declared coefficient of performance or gas utilization efficiency / auxiliary energy factor for part load at given outdoor temperatures Tj			
Tj = - 7 °C	P_{dh}	11.0	kW	Tj = - 7 °C	COP_d or $GUE_{h,bin}$ / $AEF_{h,bin}$	2.3	%
Tj = + 2 °C		6.7	kW	Tj = + 2 °C		3.4	%
Tj = + 7 °C		4.3	kW	Tj = + 7 °C		5.3	%
Tj = + 12 °C		3.9	kW	Tj = + 12 °C		6.2	%
T_{biv} = bivalent temperature		11.0	kW	T_{biv} = bivalent temperature		2.3	%
T_{OL} = operation limit		9.1	kW	T_{OL} = operation limit		1.6	%
For air-to-water heat pumps: Tj = - 15 °C (if T_{OL} < - 20 °C)		-	kW	For water-to-air heat pumps: T_j = - 15 °C (if T_{OL} < -20 °C)		-	%
Bivalent temperature	T_{biv}	-7	°C	For water-to-air heat pumps: Operation limit temperature	T_{OL}	-15	℃
Degradation co- efficient heat pumps**	C_{dh}	0.25	-				
Power consumption in modes other than 'active mode'				Supplementary heater			
Off mode	P_{OFF}	0.023	kW	back-up heating capacity *	elbu	2.3	kW
Thermostat-off mode	P_{TO}	0.215	kW	Type of energy input			
Crankcase heater mode	P_{CK}	0.000	kW	Standby mode	P_{SB}	0.023	kW
Other items							
Capacity control		variable		For air-to-air heat pumps: air flow rate,outdoor		4680	m³/h
Sound power level, outdoor	L_{WA}	73.0	dB	For water-/brine-to-air heat pumps: Rated brine or water flow rate, outdoor side heat exchanger		-	m³/h
Sound power level, indoor	L_{WA}	61.0	dB	Emissions of nitrogen oxides (if applicable)	NO_x***	-	mg/kWh fuel input GCV
				GWP of the refrigerant		675	kg CO_2 eq (100 years)
Contact details	Panasonic Testing Centre, Panasonic Marketing Europe GmbH Winsbergring 15, 22525 Hamburg, Germany						

** If C_{dh} is not determined by measurement then the default degradation coefficient of heat pumps shall be 0,25.
*** from 26 September 2018.
Where information relates to multi-split heat pumps, the test result and performance data may be obtained on the basis of the performance of the outdoor unit, with a combination of indoor unit(s) recommended by the manufacturer or importer.
**** Refer to Information requirements for UnitList

Information requirements for air-to-air air conditioners

Model(s):	Outdoor Unit	U-140PZ2E8
	Indoor Unit	S-140PF1E5B
Outdoor side heat exchanger of air conditioner:		air
Indoor side heat exchanger of air conditioner:		air
Type: compressor driven vapour compression or sorption process		vapour compression
if applicable: driver of compressor: [electric motor or fuel driven, gaseous or liquid fuel, internal or external combustion engine]		electric motor

Item	Symbol	Value	Unit	Item	Symbol	Value	Unit
Rated cooling capacity	$P_{rated,c}$	14.0	kW	Seasonal space cooling energy efficiency	$\eta_{s,c}$	211.8	%
Refrigeration load	$P_{design,c}$	14.0	kW				
Declared cooling capacity for part load at given outdoor temperatures Tj and indoor 27°/19°C (dry/wet bulb)				Declared energy efficiency ratio or gas utilization efficiency / auxiliary energy factor for part load at given outdoor temperatures Tj			
Tj= + 35 °C	Pdc	14.0	kW	Tj = + 35 °C	EER_d or $GUE_{c,bin}$ / $AEF_{c,bin}$	3.1	%
Tj = + 30 °C		10.3	kW	Tj = + 30 °C		4.7	%
Tj = + 25 °C		6.6	kW	Tj = + 25 °C		7.0	%
Tj = + 20 °C		3.8	kW	Tj = + 20 °C		8.9	%
Degradation co- efficient for air conditioners**	C_{dc}	0.25	-				
Power consumption in modes other than 'active mode'							
Off mode	P_{OFF}	0.023	kW	Crankcase heater mode	P_{CK}	0.000	kW
Thermostat-off mode	P_{TO}	0.223	kW	Standby mode	P_{SB}	0.023	kW
Other items							
Capacity control		variable		For air-to-air air conditioner: air flow rate, outdoor		5340	m³/h
Sound power level, outdoor	L_{WA}	74.0	dB				
Sound power level, indoor	L_{WA}	62.0	dB	if engine driven: Emissions of nitrogen oxides	NO_x***	-	mg/kWh fuel input GCV
				GWP of the refrigerant		675	kg CO_2 eq (100 years)
Contact details	Panasonic Testing Centre, Panasonic Marketing Europe GmbH Winsbergring 15, 22525 Hamburg, Germany						

** If C_{dc} is not determined by measurement then the default degradation coefficient air conditioners shall be 0,25.
*** from 26 September 2018.
Where information relates to multi-split air conditioners, the test result and performance data may be obtained on the basis of the performance of the outdoor unit, with a combination of indoor unit(s) recommended by the manufacturer or importer.
**** Refer to Information requirements for UnitList

Information requirements for heat pumps

Model(s):	Outdoor Unit	U-140PZ2E8
	Indoor Unit	S-140PF1E5B
Outdoor side heat exchanger of heat pump:		air
Indoor side heat exchanger of heat pump:		air
Indication if the heater is equipped with a supplementary heater:		no
if applicable: driver of compressor: [electric motor or fuel driven, gaseous or liquid fuel, internal or external combustion engine]		electric motor

Parameters shall be declared for the average heating season, parameters for the warmer and colder heating seasons are optional.

Item	Symbol	Value	Unit	Item	Symbol	Value	Unit
Rated heating capacity	$P_{rated,h}$	14.0	kW	Seasonal space heating energy efficiency	$\eta_{s,h}$	138.4	%
Refrigeration load	$P_{design,h}$	13.6	kW				
Declared heating capacity for part load at indoor temperature 20 °C and outdoor temperature Tj				Declared coefficient of performance or gas utilization efficiency / auxiliary energy factor for part load at given outdoor temperatures Tj			
Tj = - 7 °C	P_{dh}	12.0	kW	Tj = - 7 °C	COP_d or $GUE_{h,bin}$ / $AEF_{h,bin}$	2.1	%
Tj = + 2 °C		7.3	kW	Tj = + 2 °C		3.4	%
Tj = + 7 °C		4.7	kW	Tj = + 7 °C		5.2	%
Tj = + 12 °C		3.9	kW	Tj = + 12 °C		6.1	%
T_{biv} = bivalent temperature		12.0	kW	T_{biv} = bivalent temperature		2.1	%
T_{OL} = operation limit		9.1	kW	T_{OL} = operation limit		1.6	%
For air-to-water heat pumps: Tj = - 15 °C (if T_{OL} < - 20 °C)		-	kW	For water-to-air heat pumps: T_j = - 15 °C (if T_{OL} < -20 °C)		-	%
Bivalent temperature	T_{biv}	-7	°C	For water-to-air heat pumps: Operation limit temperature	T_{OL}	-15	°C
Degradation co- efficient heat pumps**	C_{dh}	0.25	-				
Power consumption in modes other than 'active mode'				Supplementary heater			
Off mode	P_{OFF}	0.023	kW	back-up heating capacity *	elbu	2.7	kW
Thermostat-off mode	P_{TO}	0.223	kW	Type of energy input			
Crankcase heater mode	P_{CK}	0.000	kW	Standby mode	P_{SB}	0.023	kW
Other items							
Capacity control		variable		For air-to-air heat pumps: air flow rate,outdoor		4980	m³/h
Sound power level, outdoor	L_{WA}	74.0	dB	For water-/brine-to-air heat pumps: Rated brine or water flow rate, outdoor side heat exchanger		-	m³/h
Sound power level, indoor	L_{WA}	62.0	dB	Emissions of nitrogen oxides (if applicable)	NO_x***	-	mg/kWh fuel input GCV
				GWP of the refrigerant		675	kg CO_2 eq (100 years)
Contact details	Panasonic Testing Centre, Panasonic Marketing Europe GmbH Winsbergring 15, 22525 Hamburg, Germany						

** If C_{dh} is not determined by measurement then the default degradation coefficient of heat pumps shall be 0,25.
*** from 26 September 2018.
Where information relates to multi-split heat pumps, the test result and performance data may be obtained on the basis of the performance of the outdoor unit, with a combination of indoor unit(s) recommended by the manufacturer or importer.
**** Refer to Information requirements for UnitList

– MEMO –